Parts Catalog - Option Detail

Electronic Parts Catalog - Option Detail				
Option	**Group**	**Graphic**	**Film Card**	**Date**
AD1100	09.03	ad102gy	F	04-MAY-93
Engines	NH/NT 855, NT495, NT743, NTA855 N106			

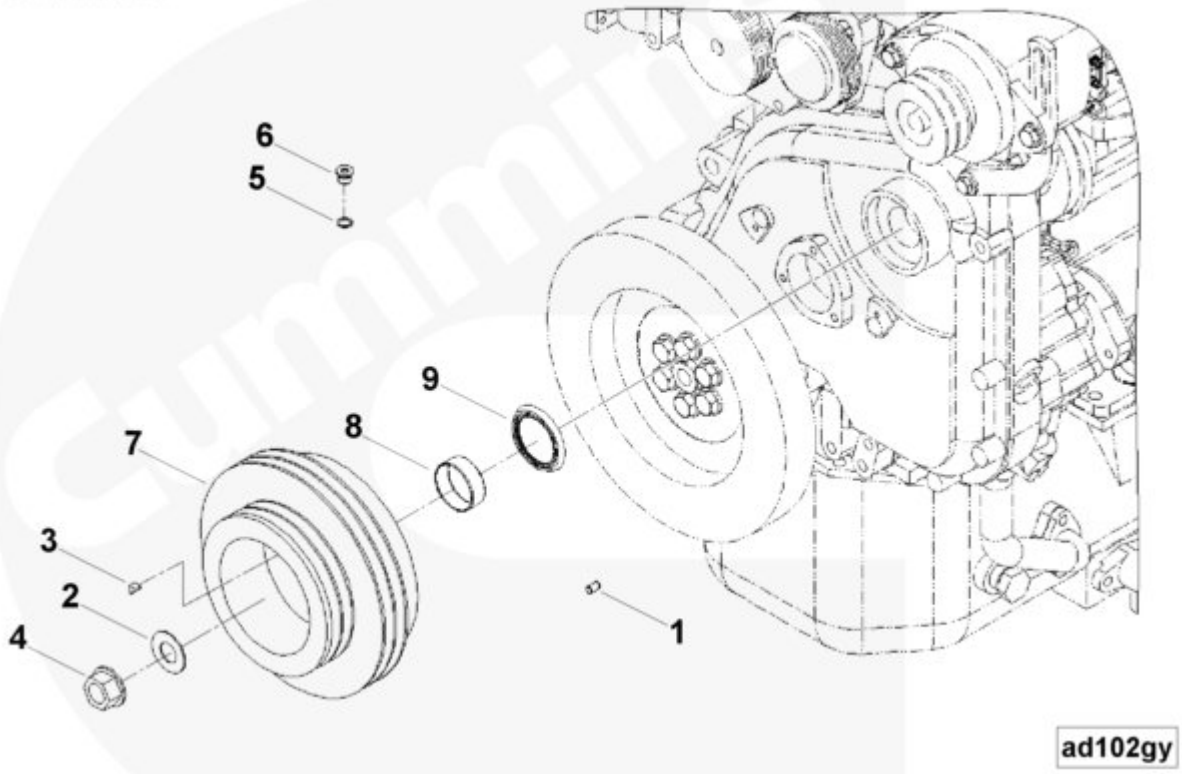

SMALL | MEDIUM | LARGE

Cart	Ref No	Part Number	Part Description	Required	Remarks
View My Cart					
		AD1100	Accessory Drive		Five groove accessory drive...(More)
					pulley. Poly-vee groove to
					drive water pump. Two grooves
					to drive alternator when it
					is mounted above fuel pump
					(marine arrangement). Two
					empty grooves 0.625inch

					(16MM) apart, 7inch (178MM)
					diameter for SAE 1/2 inch
					belts.
☐	1	70550	Pin Dowel	1	5/16 x 1/2 Inch
☐	2	193136	Plain Washer	1	1 3/4 in.
☐	3	3008947	Keyway Seal	1	
☐	4	3012526	Hexagon Flange Nut	1	7/8 - 14 UNF
☐	5	3037537	O-Ring Seal	1	
	6	3040813	Threaded Plug	1	9/16 - 18 UNF
☐	7	3013538	Accessory Drive Pulley	1	
☐	8	3076346	Wear Sleeve	1	
		3010340	Accessory Drive Pulley	1	
☐	9	3076202	Dust Seal	1	

© 2019 Cummins Inc., Box 3005, Columbus, IN 47202-3005 U.S.A.
Terms of Use and Disclaimers | Recommended System Requirements
Need Assistance? Please click on the Contact Us button in the top right corner of any page.

Parts Catalog - Option Detail

Electronic Parts Catalog - Option Detail				
Option	**Group**	**Graphic**	**Film Card**	**Date**
AC1120	10.04	ac101gc	F	15-JUN-95
Engines	NH/NT 855, NT495, NT743, NTA855 N106			

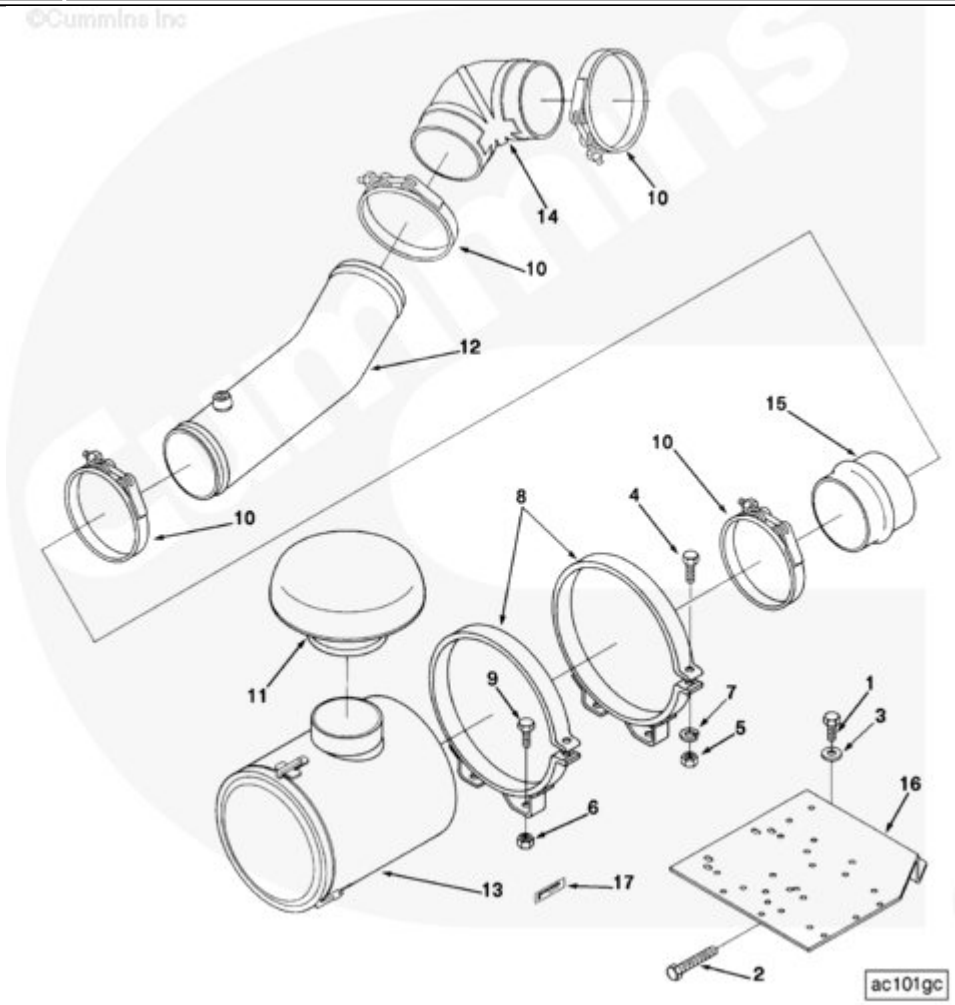

SMALL | MEDIUM | LARGE

Cart	Ref No	Part Number	Part Description	Required	Remarks
View My Cart					
		AC1120	Air Cleaner		Normal duty engine mounted...(More)
					air cleaner with inlet hood.
					For use in clean
					environments. Suitable for

					all naturally aspirated 855
					models only.
	1	S 186 A	Hexagon Head Cap Screw	2	5/8 - 18 x 1 1/4 inch
	2	120516	Hexagon Head Cap Screw	2	1/2 - 13 x 5 1/4 in.
	3	127316	Plain Washer	2	5/8 in.
	4	S 111	Hexagon Head Cap Screw	2	5/16 - 18 X 1 1/2 in.
	5	S 221	Heavy Hexagon Nut	2	5/16 - 18 UNC
	6	S 223	Heavy Hexagon Nut	4	3/8 - 16 UNC
	7	S 605	Lock Washer	2	5/16 in.
	8	105916	Air Cleaner Strap	2	
	9	3010595	Captive Washer Cap Screw	4	3/8 - 16 X 1 in.
	10	125741	T-Bolt Clamp	4	6 inch
	11	195873	Cleaner Cap	1	
	12	3000224	Air Inlet Tube	1	
	13	3021643	Air Cleaner	1	
	14	3030772	Elbow Hose	1	
	15	3030790	Hump Hose	1	
	16	3044632	Air Cleaner Bracket	1	
	17	3318651	Decal	1	

© 2019 Cummins Inc., Box 3005, Columbus, IN 47202-3005 U.S.A.
Terms of Use and Disclaimers | Recommended System Requirements
Need Assistance? Please click on the Contact Us button in the top right corner of any page.

Parts Catalog - Option Detail

Electronic Parts Catalog - Option Detail				
Option	**Group**	**Graphic**	**Film Card**	**Date**
IC1022	10.01.2	ic100gj	F	15-JAN-91
Engines	NH/NT 855, NT495, NT743, NTA855 N106			

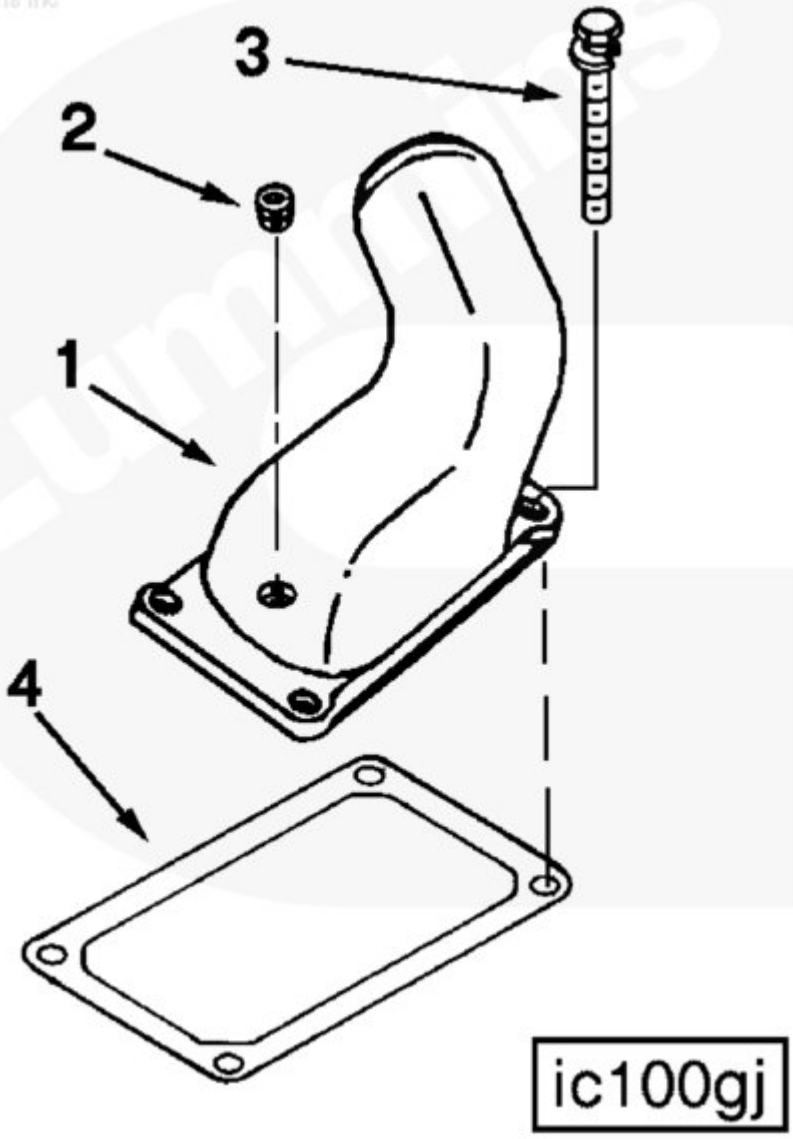

SMALL | MEDIUM | LARGE

Cart	Ref No	Part Number	Part Description	Required	Remarks
View My Cart					
		IC1022	Air Inlet Connection		5.5inch (140mm) outside...(More)

					diameter air intake
					connection with axis of inlet
					at 60degrees to longitudinal
					axis of mounting flange. When
					mounted on top of manifold
					points across engine and
					slightly to rear. When
					mounted on side of manifold
					points up and slightly to
					rear. Used with engine
					mounted air cleaners.
					Naturally aspirated models
					only.
☐	1	155250	Air Intake Connection	1	
☐	2	3008470	Pipe Plug	1	1 NPT.
☐	3	3011715	Captive Washer Cap Screw	4	3/8 - 16 X 1 3/16 in.
☐	4	3012972	Intake Manifold Gasket	1	

© 2019 Cummins Inc., Box 3005, Columbus, IN 47202-3005 U.S.A.
Terms of Use and Disclaimers | Recommended System Requirements
Need Assistance? Please click on the Contact Us button in the top right corner of any page.

Parts Catalog - Option Detail

Electronic Parts Catalog - Option Detail				
Option	**Group**	**Graphic**	**Film Card**	**Date**
IM1063	10.01	im102gp	F	15-OCT-92
Engines	NH/NT 855, NT495, NT743, NTA855 N106			

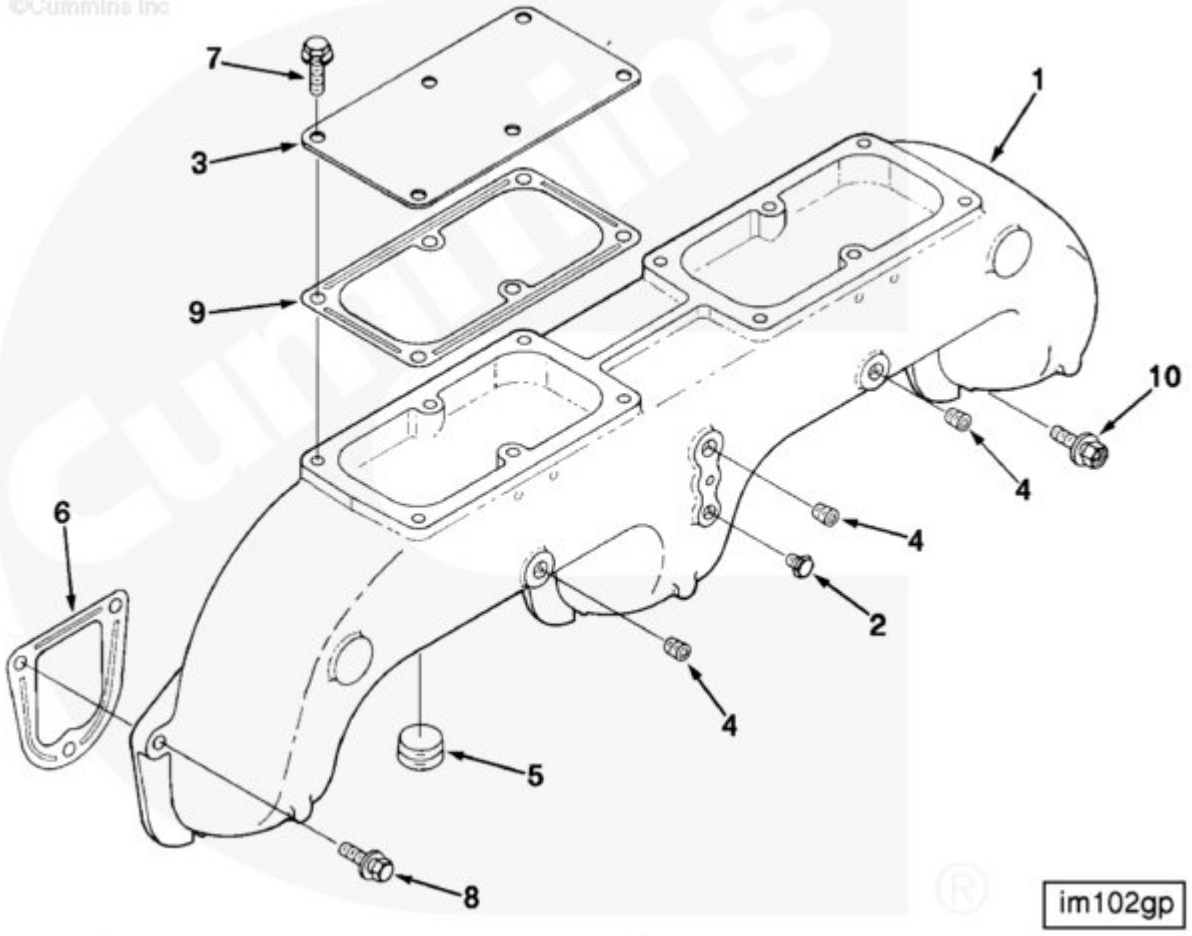

SMALL | MEDIUM | LARGE

Cart	Ref No	Part Number	Part Description	Required	Remarks
View My Cart					
		IM1063	Air Intake Manifold		Cast aluminum manifold with...(More)
					inlet at top rear and cover
					plate at top front. Has
					tapped holes for starting
					fluid nozzle when used on

					naturally aspirated engines.
					Used with high side mount or
					with top mount turbochargers
					or with any naturally
					aspirated inlet connection.
					Used with engine mounted air
					cleaners on naturally
					aspirated model.
☐	1	141761	Air Intake Manifold	1	
☐	2	70295	Pipe Plug	1	
☐	3	144257	Cover Plate	1	
☐	4	3008466	Pipe Plug	3	1/4 NPT.
☐	5	3008470	Pipe Plug	1	1 NPT.
☐	6	3008591	Intake Manifold Gasket	3	
☐	7	3010595	Captive Washer Cap Screw	6	3/8 - 16 X 1 in.
☐	8	3011715	Captive Washer Cap Screw	6	3/8 - 16 X 1 3/16 in.
☐	9	3019227	Intake Manifold Gasket	1	
☐	10	3051427	Captive Washer Cap Screw	3	3/8 - 16 X 1 5/16 in.

© 2019 Cummins Inc., Box 3005, Columbus, IN 47202-3005 U.S.A.
Terms of Use and Disclaimers | Recommended System Requirements
Need Assistance? Please click on the Contact Us button in the top right corner of any page.

Parts Catalog - Option Detail

Electronic Parts Catalog - Option Detail				
Option	**Group**	**Graphic**	**Film Card**	**Date**
EE8071	13.02	ea100gb	F	15-JAN-88
Engines	NH/NT 855, NT495, NT743, NTA855 N106			

©Cummins Inc

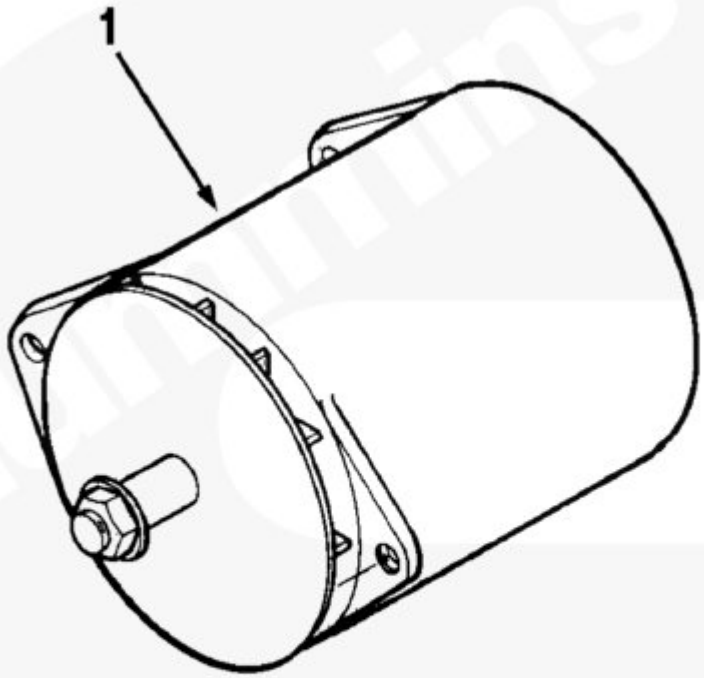

ea100gb

SMALL | MEDIUM | LARGE

Cart	Ref No	Part Number	Part Description	Required	Remarks
View My Cart					
		EE8071	Alternator		24volt 60amp Delco-Remy 30 SI...(More)
					450 alternator with built-in
					voltage regulator. Marine
					corrosion resistant. For use

					with insulated return system.
☐	1	3000347	Alternator	1	

© 2019 Cummins Inc., Box 3005, Columbus, IN 47202-3005 U.S.A.
Terms of Use and Disclaimers | Recommended System Requirements
Need Assistance? Please click on the Contact Us button in the top right corner of any page.

Parts Catalog - Option Detail

Electronic Parts Catalog - Option Detail				
Option	**Group**	**Graphic**	**Film Card**	**Date**
EE1130	13.02.3	ee100gw	F	15-MAR-94
Engines	NH/NT 855, NT495, NT743, NTA855 N106			

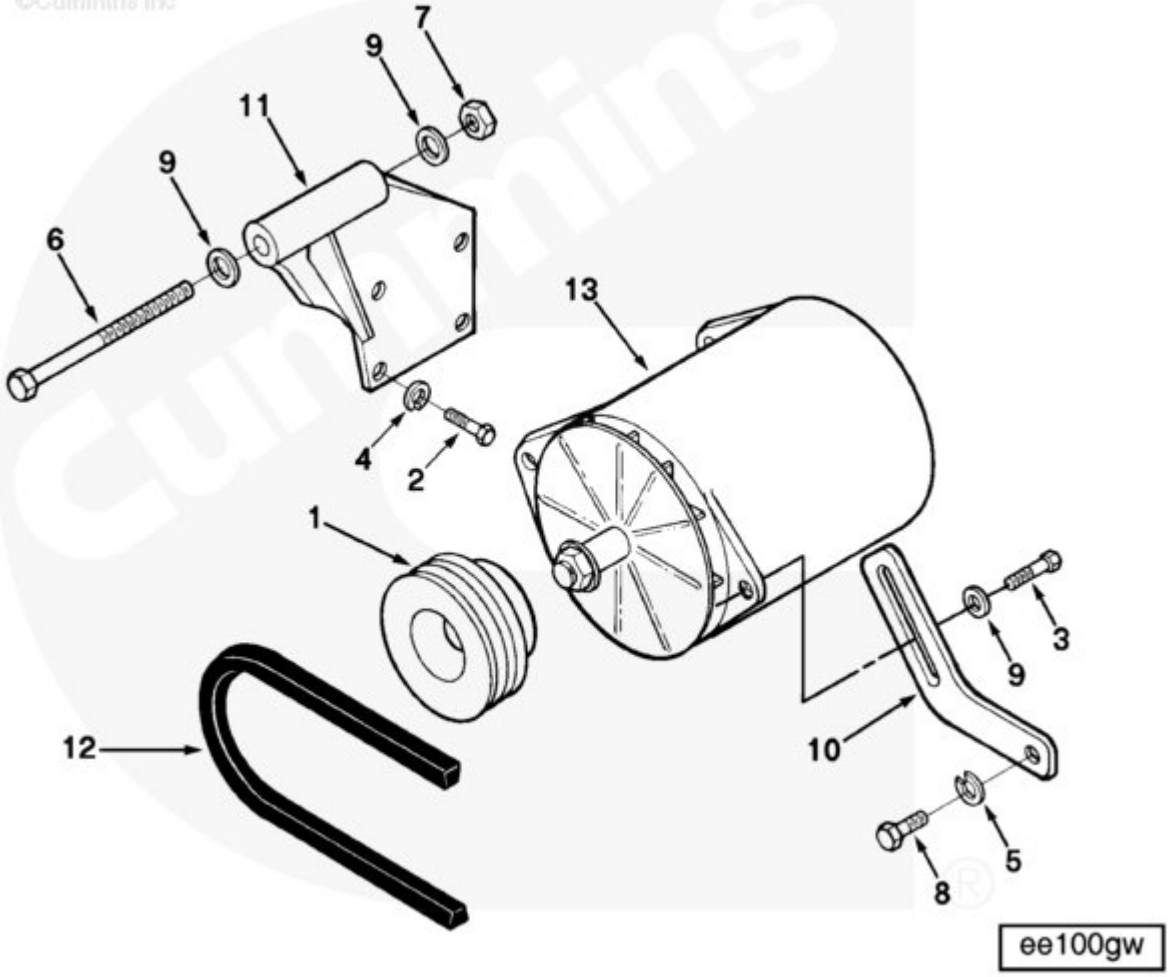

SMALL | MEDIUM | LARGE

Cart	Ref No	Part Number	Part Description	Required	Remarks
View My Cart					
		EE1130	Alternator Mounting		Alternator mounting located...(More)
					high on fuel pump side
					(marine arrangement).
					Includes bracket, link, belts

					and alternator pulley. Can
					be used with marine type
					gear cover.
	1	213326	Alternator Pulley	1	
	2	S 112	Hexagon Head Cap Screw	4	3/8 - 16 X 1 in.
	3	S 145	Hexagon Head Cap Screw	1	1/2 - 13 X 1 1/4 in.
	4	S 604	Lock Washer	4	3/8 in.
	5	S 610	Lock Washer	1	7/16 in.
	6	70111	Hexagon Head Cap Screw	1	1/2 - 20 x 6 inch
	7	70897	Lock Nut	1	1/2 - 20 UNF
	8	103009	Hexagon Head Cap Screw	1	7/16 - 14 X 1 1/4 in.
	9	203310	Plain Washer	3	9/16 in.
	10	3006231	Adjusting Link	1	
	11	3010373	Alternator Bracket	1	
	12	3040303	V Belt	2	
	13	3000347	Alternator	1	

© 2019 Cummins Inc., Box 3005, Columbus, IN 47202-3005 U.S.A.
Terms of Use and Disclaimers | Recommended System Requirements
Need Assistance? Please click on the Contact Us button in the top right corner of any page.

Parts Catalog - Option Detail

Electronic Parts Catalog - Option Detail				
Option	**Group**	**Graphic**	**Film Card**	**Date**
BR1071	03.02	br100ga	F	15-AUG-95
Engines	NH/NT 855, NT495, NT743, NTA855 N106			

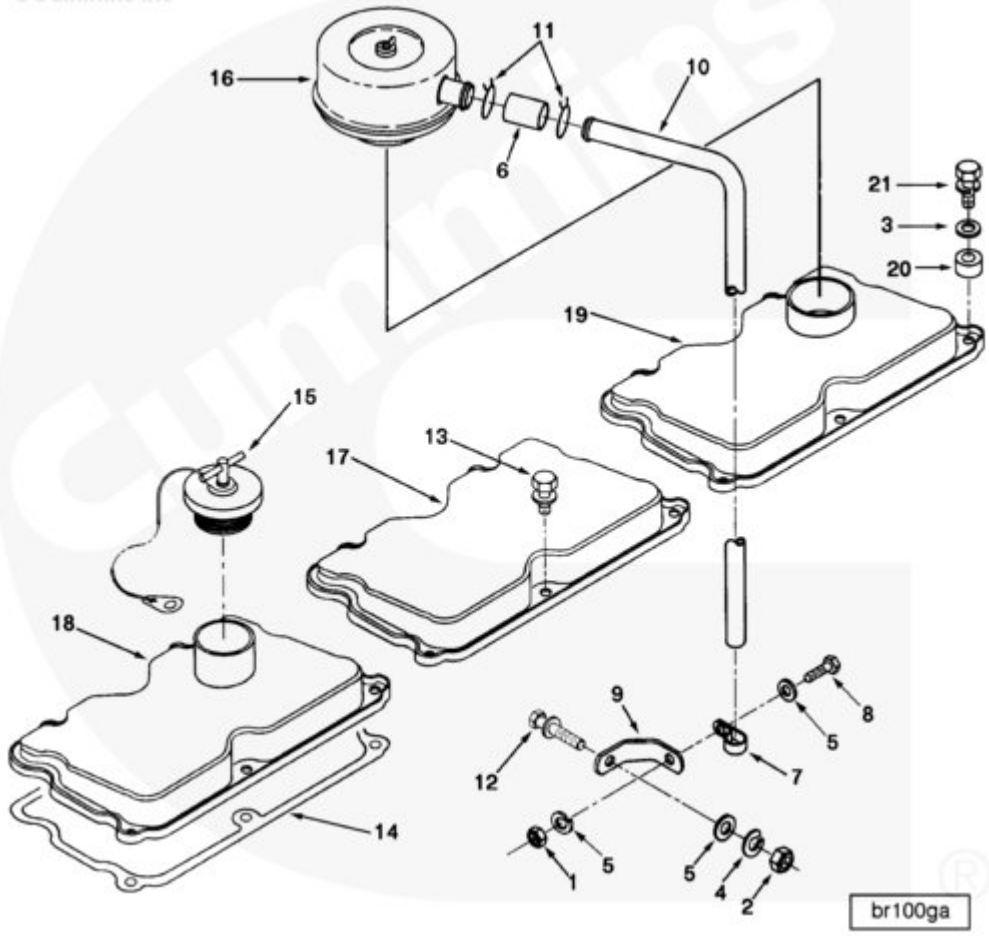

SMALL | MEDIUM | LARGE

Cart	Ref No	Part Number	Part Description	Required	Remarks
View My Cart					
		BR1071	Breather And Valve Cover		
					Breather And Valve Cover
					Engine valve covers with both
					breather and filler. Breather

					with vent hose located over
					number six cylinder at rear
					of engine. Filler located
					over number two cylinder. For
					naturally aspirated engines
					only. For Brazil, use MP22182
					in place of MP3887 and 255180
					in place of 257014.
☐	1	S 221	Heavy Hexagon Nut	1	5/16 - 18 UNC
☐	2	S 223	Heavy Hexagon Nut	1	3/8 - 16 UNC
☐	3	S 602	Plain Washer	1	3/8 in.
☐	4	S 604	Lock Washer	1	3/8 in.
☐	5	S 605	Lock Washer	1	5/16 in.
☐	6	64775	Plain Hose	1	
☐	7	3082570	Clip	1	
☐	8	S 109	Hexagon Head Cap Screw	2	3/8 - 16 x 7/8 in.
☐	9	111670	Tube Brace	1	
☐	10	142486	Breather Tube	1	
☐	11	3008596	Spring Hose Clamp	2	
☐	13	3038076	Captive Washer Cap Screw	14	3/8 - 16 X 15/16 in.
☐	14	3067459	Rocker Lever Cover Gasket	3	
☐	15	107981	Filler Cap	1	
☐	16	257014	Crankcase Breather	1	
☐	17	3006183	Rocker Lever Cover	1	
☐	18	3006349	Rocker Lever Cover	1	
☐	19	3006358	Rocker Lever Cover	1	
☐		3012297	Rocker Lever Cover	1	
		3046716	Oil Baffle	1	
☐	20	63385	Mounting Spacer	1	

☐	21	3035624	Captive Washer Cap Screw	1	3/8 - 16 X 1 1/2 in.

© 2019 Cummins Inc., Box 3005, Columbus, IN 47202-3005 U.S.A.
Terms of Use and Disclaimers | Recommended System Requirements
Need Assistance? Please click on the Contact Us button in the top right corner of any page.

Parts Catalog - Option Detail

Electronic Parts Catalog - Option Detail				
Option	**Group**	**Graphic**	**Film Card**	**Date**
BR1071	03.02	br100ga	F	15-AUG-95
Engines	NH/NT 855, NT495, NT743, NTA855 N106			

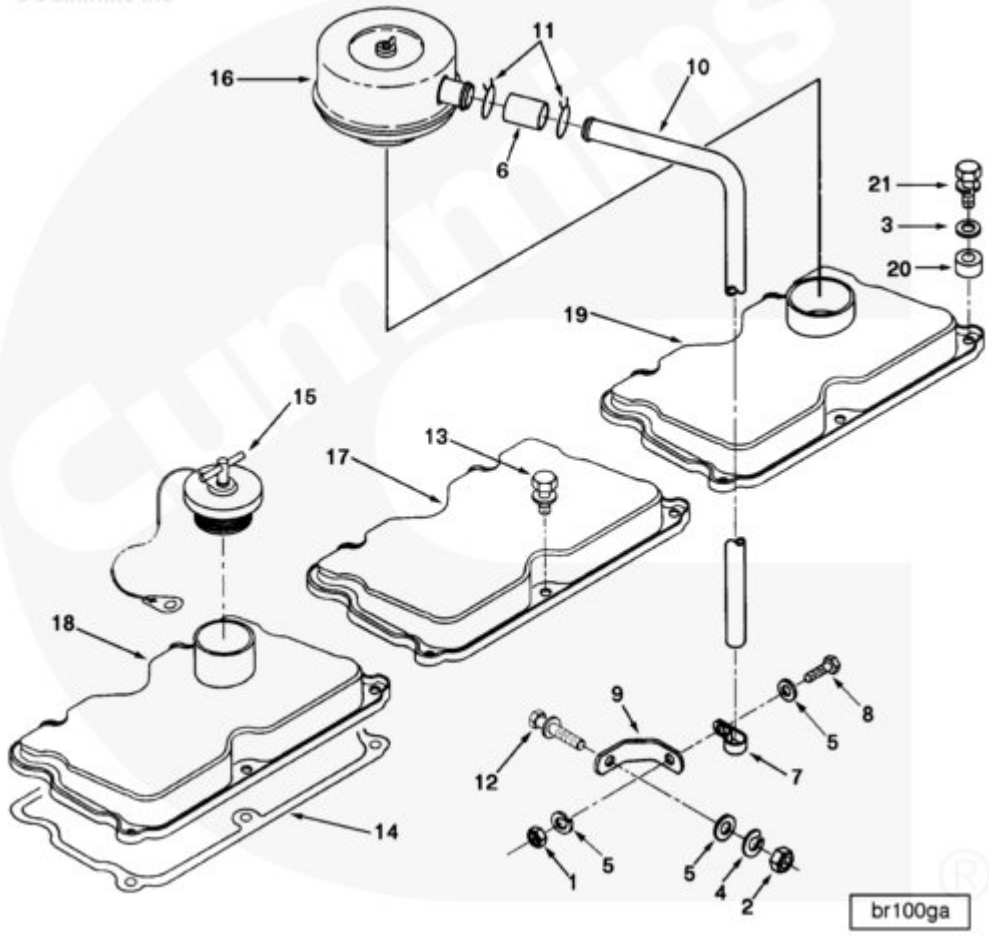

SMALL | MEDIUM | LARGE

Cart	Ref No	Part Number	Part Description	Required	Remarks
View My Cart					
		BR1071	Breather And Valve Cover		
					Breather And Valve Cover
					Engine valve covers with both
					breather and filler. Breather

					with vent hose located over
					number six cylinder at rear
					of engine. Filler located
					over number two cylinder. For
					naturally aspirated engines
					only. For Brazil, use MP22182
					in place of MP3887 and 255180
					in place of 257014.
☐	1	S 221	Heavy Hexagon Nut	1	5/16 - 18 UNC
☐	2	S 223	Heavy Hexagon Nut	1	3/8 - 16 UNC
☐	3	S 602	Plain Washer	1	3/8 in.
☐	4	S 604	Lock Washer	1	3/8 in.
☐	5	S 605	Lock Washer	1	5/16 in.
☐	6	64775	Plain Hose	1	
☐	7	3082570	Clip	1	
☐	8	S 109	Hexagon Head Cap Screw	2	3/8 - 16 x 7/8 in.
☐	9	111670	Tube Brace	1	
☐	10	142486	Breather Tube	1	
☐	11	3008596	Spring Hose Clamp	2	
☐	13	3038076	Captive Washer Cap Screw	14	3/8 - 16 X 15/16 in.
☐	14	3067459	Rocker Lever Cover Gasket	3	
☐	15	107981	Filler Cap	1	
☐	16	257014	Crankcase Breather	1	
☐	17	3006183	Rocker Lever Cover	1	
☐	18	3006349	Rocker Lever Cover	1	
☐	19	3006358	Rocker Lever Cover	1	
☐		3012297	Rocker Lever Cover	1	
		3046716	Oil Baffle	1	
☐	20	63385	Mounting Spacer	1	

☐	21	3035624	Captive Washer Cap Screw	1	3/8 - 16 X 1 1/2 in.

© 2019 Cummins Inc., Box 3005, Columbus, IN 47202-3005 U.S.A.
Terms of Use and Disclaimers | Recommended System Requirements
Need Assistance? Please click on the Contact Us button in the top right corner of any page.

Parts Catalog - Option Detail

Electronic Parts Catalog - Option Detail				
Option	**Group**	**Graphic**	**Film Card**	**Date**
BP1126	04.01	kf100gm	F	15-SEP-94
Engines	NH/NT 855, NT495, NT743, NTA855 N106			

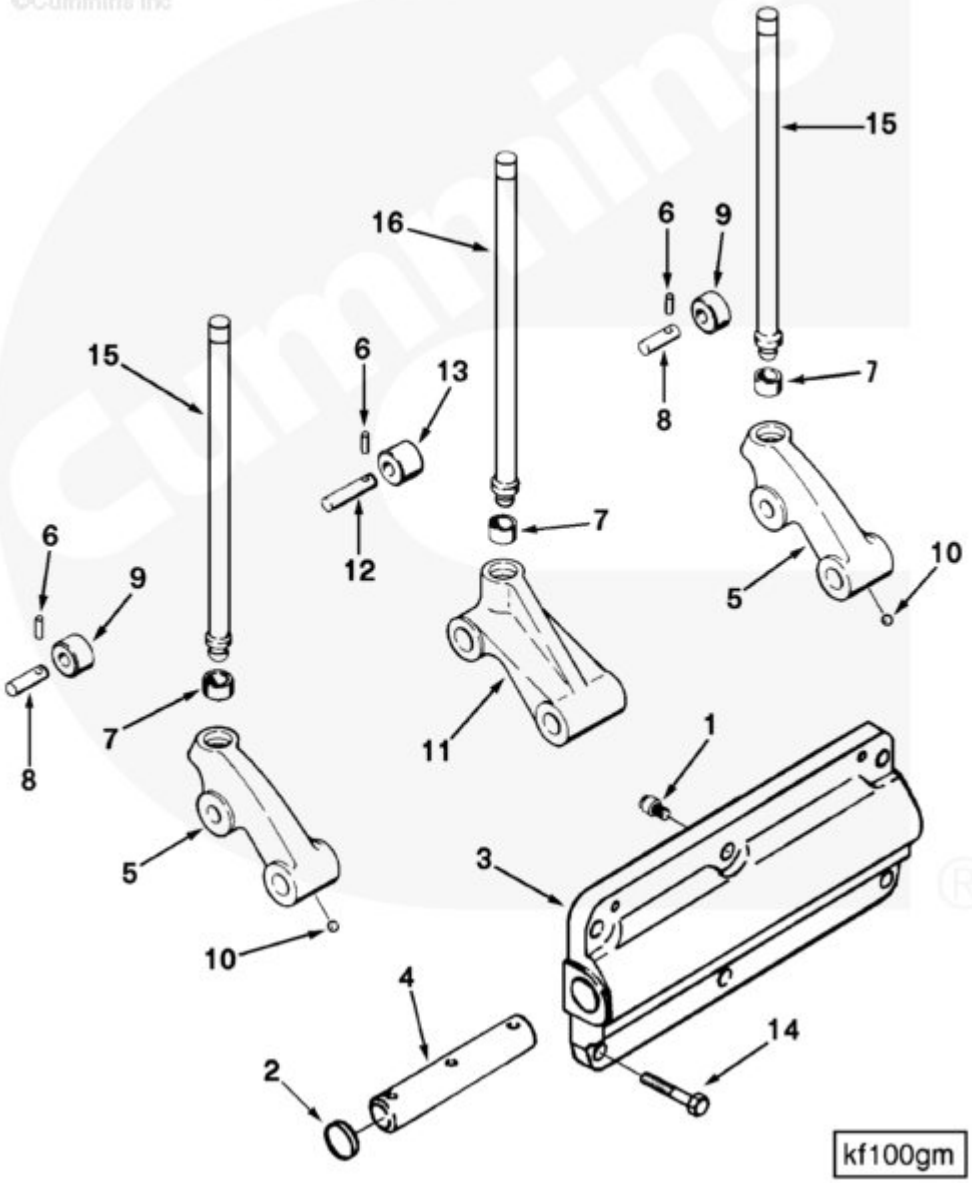

SMALL | MEDIUM | LARGE

Cart	Ref No	Part Number	Part Description	Required	Remarks
View My Cart					
		BP1126	Cam Follower Housing		

					Cam Follower Housing
☐		3081251	Cam Follower Housing	3	Recon equivalent 3081251 RX
☐	1	69736	Cam Follower Shaft Screw	2	
☐	2	3007634	Expansion Plug	2	
☐	3	3016887	Cam Follower Housing	1	
☐	4	3065125	Cam Follower Shaft	2	
	5	3056568	Cam Follower Lever	4	(3056566)
☐	6	3064309	Roll Pin	1	
☐	7	213559	Cam Follower Socket	1	
☐	8	3013331	Cam Follower Roller Pin	1	
☐	9	3036933	Cam Follower Roller	1	
☐	10	3067941	Ball Plug	1	
☐	11	3081250	Cam Follower Lever	2	
☐	6	3064309	Roll Pin	1	
☐	7	213559	Cam Follower Socket	1	
☐	12	3013330	Cam Follower Roller Pin	1	
☐	13	3081248	Cam Follower Roller	1	
☐	14	S 120 A	Hexagon Head Cap Screw	15	3/8 - 24 x 7/8 inch
☐	15	3046420	Push Rod	12	
☐	16	3046430	Push Rod	6	

© 2019 Cummins Inc., Box 3005, Columbus, IN 47202-3005 U.S.A.
Terms of Use and Disclaimers | Recommended System Requirements
Need Assistance? Please click on the Contact Us button in the top right corner of any page.

Parts Catalog - Option Detail

Electronic Parts Catalog - Option Detail				
Option	**Group**	**Graphic**	**Film Card**	**Date**
BP1126	04.01	kf100gm	F	15-SEP-94
Engines	NH/NT 855, NT495, NT743, NTA855 N106			

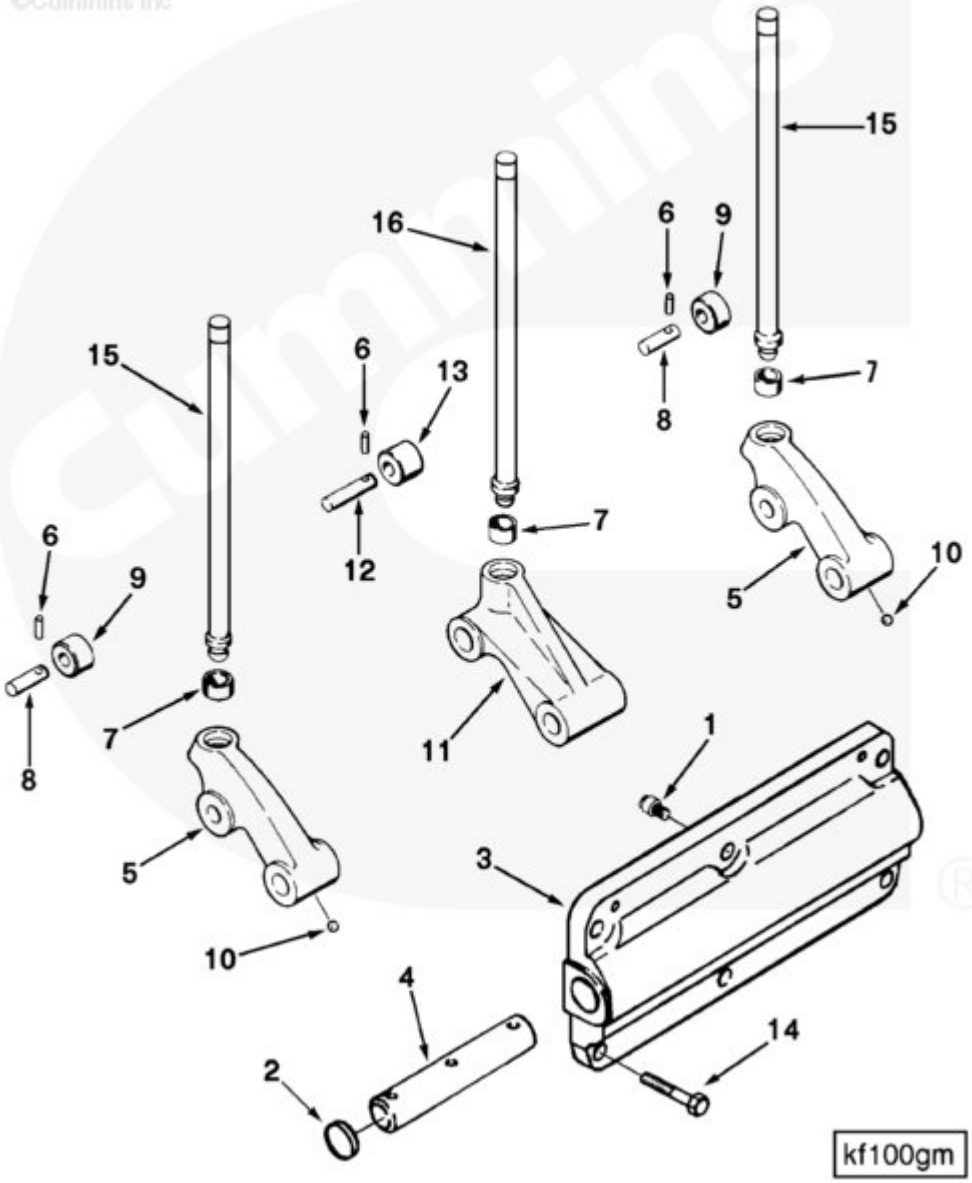

SMALL | MEDIUM | LARGE

Cart	Ref No	Part Number	Part Description	Required	Remarks
View My Cart					
		BP1126	Cam Follower Housing		

					Cam Follower Housing
☐		3081251	Cam Follower Housing	3	Recon equivalent 3081251 RX
☐	1	69736	Cam Follower Shaft Screw	2	
☐	2	3007634	Expansion Plug	2	
☐	3	3016887	Cam Follower Housing	1	
☐	4	3065125	Cam Follower Shaft	2	
	5	3056568	Cam Follower Lever	4	(3056566)
☐	6	3064309	Roll Pin	1	
☐	7	213559	Cam Follower Socket	1	
☐	8	3013331	Cam Follower Roller Pin	1	
☐	9	3036933	Cam Follower Roller	1	
☐	10	3067941	Ball Plug	1	
☐	11	3081250	Cam Follower Lever	2	
☐	6	3064309	Roll Pin	1	
☐	7	213559	Cam Follower Socket	1	
☐	12	3013330	Cam Follower Roller Pin	1	
☐	13	3081248	Cam Follower Roller	1	
☐	14	S 120 A	Hexagon Head Cap Screw	15	3/8 - 24 x 7/8 inch
☐	15	3046420	Push Rod	12	
☐	16	3046430	Push Rod	6	

© 2019 Cummins Inc., Box 3005, Columbus, IN 47202-3005 U.S.A.
Terms of Use and Disclaimers | Recommended System Requirements
Need Assistance? Please click on the Contact Us button in the top right corner of any page.

Parts Catalog - Option Detail

Electronic Parts Catalog - Option Detail				
Option	**Group**	**Graphic**	**Film Card**	**Date**
PP413	04.03	dd100gk	F	15-AUG-96
Engines	NH/NT 855, NT495, NT743, NTA855 N106			

©Cummins Inc

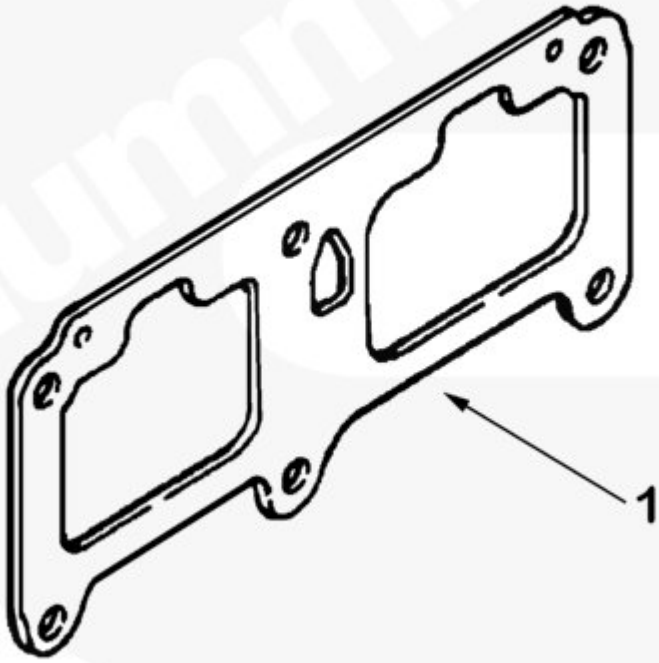

dd100gk

SMALL | MEDIUM | LARGE

Cart	Ref No	Part Number	Part Description	Required	Remarks
View My Cart					
		PP413	Cam Follower Housing		
					Cam Follower Housing
☐	1	3068473	Cam Follower Housing Gasket	3	

© 2019 Cummins Inc., Box 3005, Columbus, IN 47202-3005 U.S.A.
Terms of Use and Disclaimers | Recommended System Requirements
Need Assistance? Please click on the Contact Us button in the top right corner of any page.

Parts Catalog - Option Detail

Electronic Parts Catalog - Option Detail				
Option	**Group**	**Graphic**	**Film Card**	**Date**
PP413	01.07	cg100ga	F	15-SEP-95
Engines	NH/NT 855, NT495, NT743, NTA855 N106			

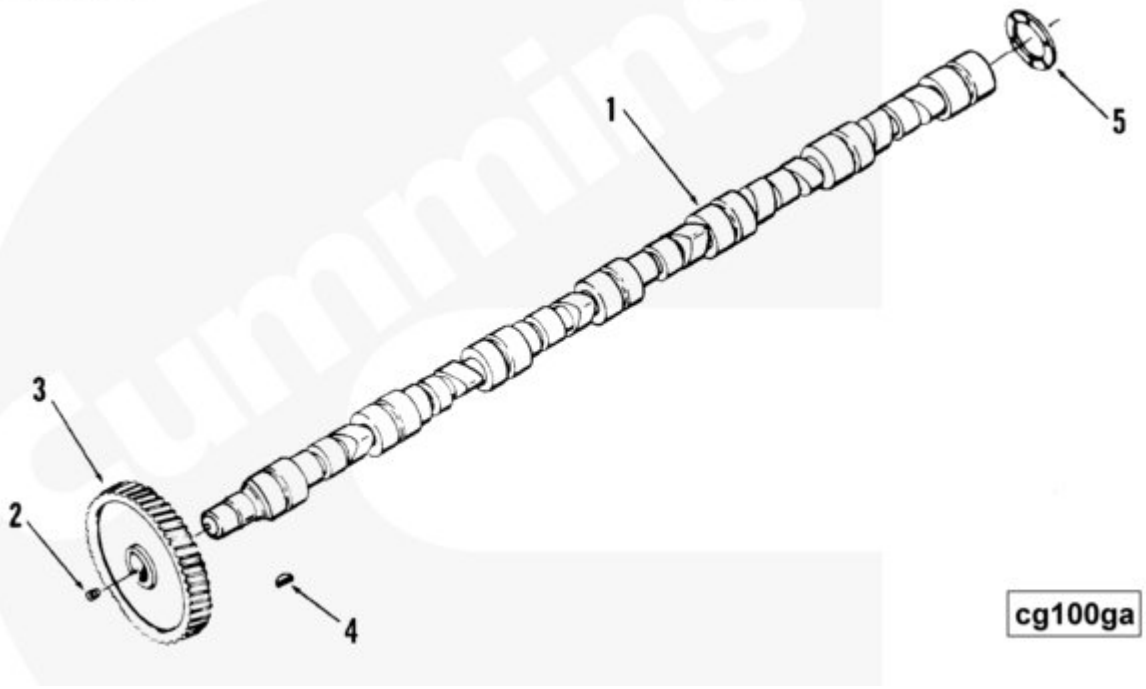

SMALL | MEDIUM | LARGE

Cart	Ref No	Part Number	Part Description	Required	Remarks
View My Cart					
		PP413	Camshaft And Gear		
					Camshaft And Gear
					For N-855 naturally aspirated
					Big Cam models.
	1	3034580	Camshaft	1	
☐	2	68193	Pipe Plug	1	1/8 NPT
☐	3	3002901	Camshaft Gear	1	

☐	4	3021601	Plain Woodruff Key	1	
☐	5	215233	Thrust Bearing	1	

© 2019 Cummins Inc., Box 3005, Columbus, IN 47202-3005 U.S.A.
Terms of Use and Disclaimers | Recommended System Requirements
Need Assistance? Please click on the Contact Us button in the top right corner of any page.

Parts Catalog - Option Detail

Electronic Parts Catalog - Option Detail				
Option	**Group**	**Graphic**	**Film Card**	**Date**
PP413	01.04	cx100gb	F	30-MAR-97
Engines	NH/NT 855, NT495, NT743, NTA855 N106			

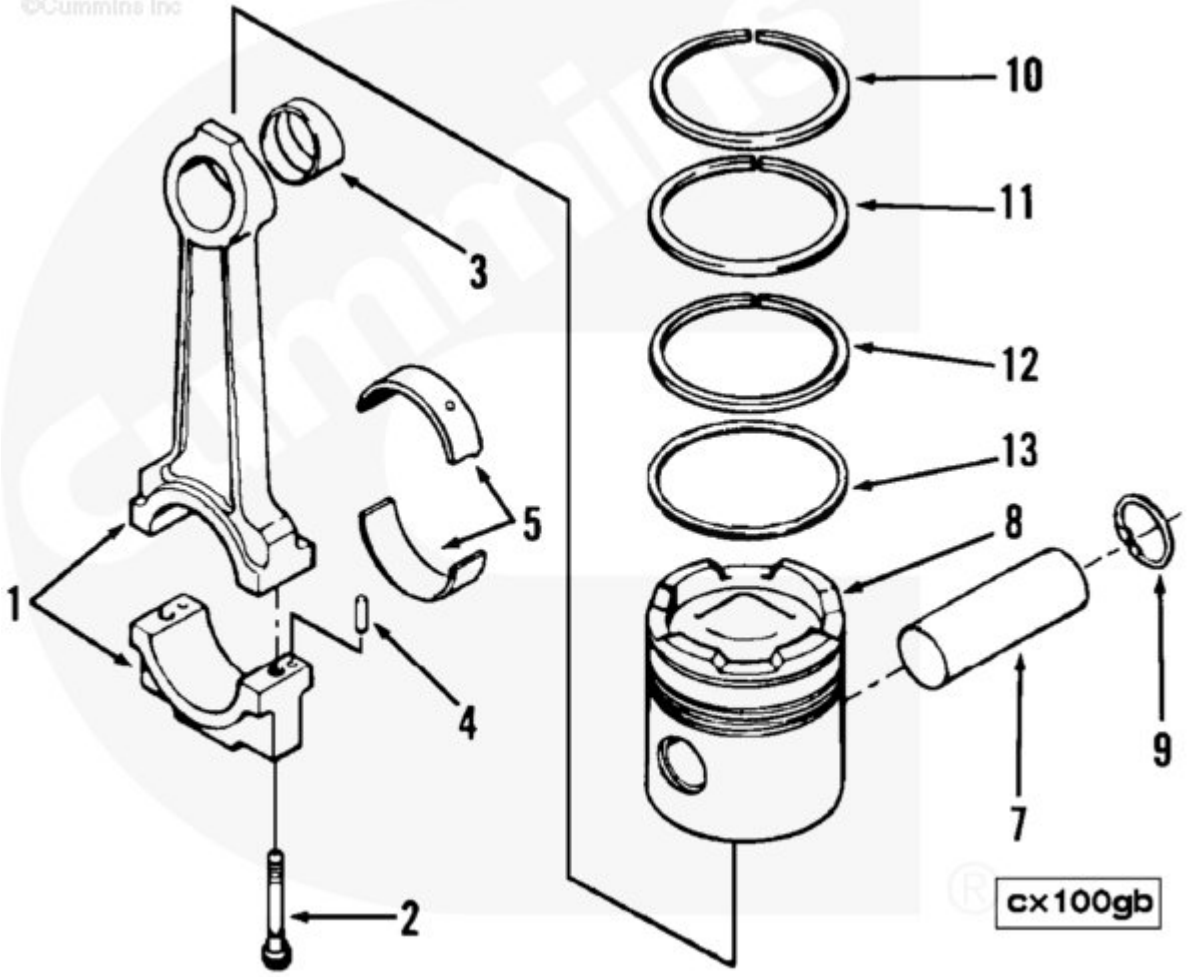

SMALL | MEDIUM | LARGE

Cart	Ref No	Part Number	Part Description	Required	Remarks
View My Cart					
		PP413	Connecting Rod And Piston		
					Connecting Rod And Piston
					Performance parts for N-855
					naturally aspirated Big Cam

					models. CPL 413
					Certified By: No
					Timing Code: Ce AFC: No
					ASA: No
					Exhaust manifold - wet and
					dry
					Aftercooler:
					No
					reference: CPL no. 413
					Contains stellite valves.
☐	1	3013930	Engine Connecting Rod	6	
☐	2	3055171	Connecting Rod Cap Screw	2	
☐	3	187420	Bushing	1	
☐	4	70550	Pin Dowel	2	5/16 x 1/2 inch
☐	5	214950	Connecting Rod Bearing	12	Standard
☐	5	214951	Connecting Rod Bearing	12	.010 in. Oversize
☐	5	214952	Connecting Rod Bearing	12	.020 in. Oversize
☐	5	214953	Connecting Rod Bearing	12	.030 in. Oversize
☐	5	214954	Connecting Rod Bearing	12	.040 in. Oversize
☐	7	191970	Piston Pin	6	
☐		3801703	Engine Piston Kit	6	
☐	8	3048650	Engine Piston	1	Compression Ratio 15.5:1
☐	9	175755	Retaining Ring	2	
☐		3801056	Piston Ring Set	6	
☐	10	3012331	Compression Piston Ring	1	
☐	11	3012332	Compression Piston Ring	1	
☐	12	3056429	Compression Piston Ring	1	
	13	218732	Oil Piston Ring	1	

© 2019 Cummins Inc., Box 3005, Columbus, IN 47202-3005 U.S.A.

Parts Catalog - Option Detail

Electronic Parts Catalog - Option Detail				
Option	**Group**	**Graphic**	**Film Card**	**Date**
WF1062	08.08	wf100go	F	20-JAN-99
Engines	NH/NT 855, NT495, NT743, NTA855 N106			

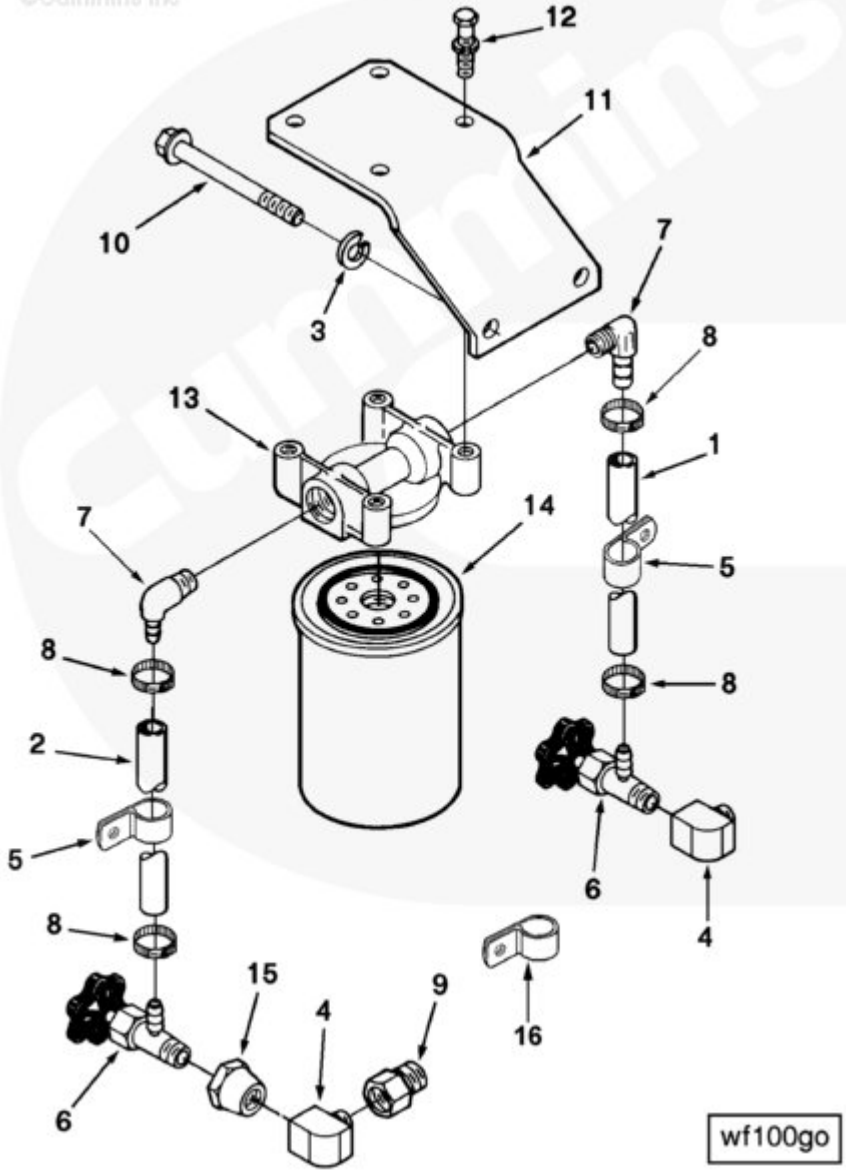

SMALL | MEDIUM | LARGE

Cart	Ref No	Part Number	Part Description	Required	Remarks
View My Cart					
		WF1062	Corrosion Resistor		

					Corrosion Resistor
					Spin on corrosion resistor
					mounted on bracket located at
					front port of water cooled
					exhaust manifold and plumbed.
					Mounting code 1401. For
					Brazil use MP22250 in place
					of 3013143.
☐	1	179924	Plain Hose	1	
☐	2	179934	Plain Hose	1	
☐	3	S 610	Lock Washer	2	7/16 in.
☐	4	70470	Plain Street Pipe Elbow	1	
☐	5	152767	Clip	2	
☐	6	179901	Shut-Off Valve	2	
☐	7	179903	Elbow Hose Coupling	2	
☐	8	179904	Hose Clamp	4	3/8 - 7/8 in.
☐	9	187317	Plain Adapter	1	
☐	10	190799	Hexagon Head Cap Screw	2	7/16 - 14 x 4 3/4 inch
☐	11	3010360	Corrosion Resistor Bracket	1	
☐	12	3010596	Captive Washer Cap Screw	4	3/8 - 16 x 1 1/4 in.
☐		3827107	Corrosion Resistor	1	
☐	13	204163	Corrosion Resistor Head	1	
☐	14	3318319	Corrosion Resistor	1	
☐	15	3820760	Reducing Pipe Adapter	1	
☐	16	69911 A	Clip	1	

© 2019 Cummins Inc., Box 3005, Columbus, IN 47202-3005 U.S.A.
Terms of Use and Disclaimers | Recommended System Requirements
Need Assistance? Please click on the Contact Us button in the top right corner of any page.

Parts Catalog - Option Detail

Electronic Parts Catalog - Option Detail				
Option	**Group**	**Graphic**	**Film Card**	**Date**
BP1126	01.02	bb100ga	F	15-SEP-94
Engines	NH/NT 855, NT495, NT743, NTA855 N106			

©Cummins Inc

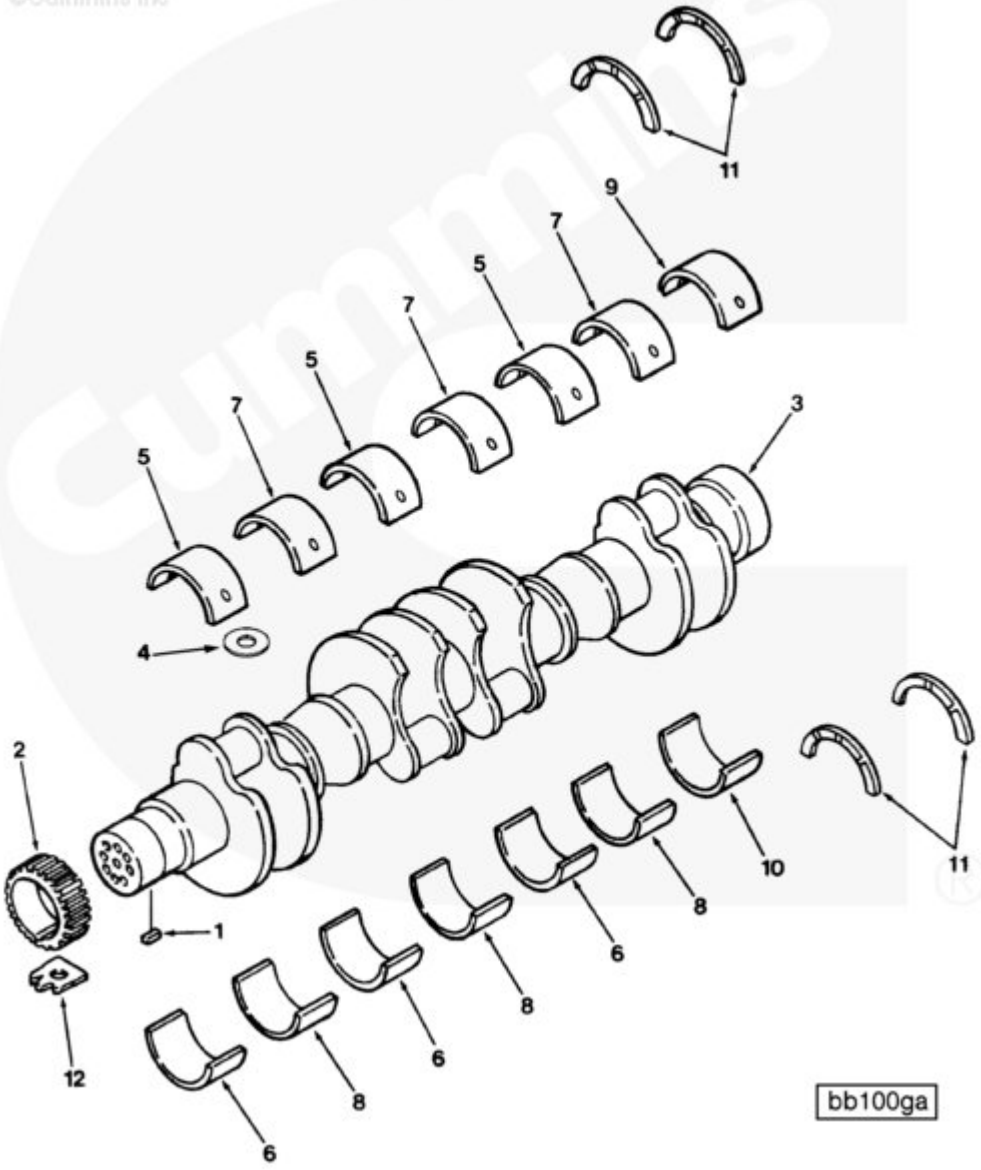

SMALL | MEDIUM | LARGE

Cart	Ref No	Part Number	Part Description	Required	Remarks
View My Cart					
		BP1126	Crankshaft And Main Bearings		

					Crankshaft
	1	210179	Rectangular Key	1	
	2	3014614	Crankshaft Gear	1	
	3	3608833	Engine Crankshaft	1	
	4	3037045	Ring Dowel	7	
		3801260	Main Bearing-Standard Set	1	Standard
	5	3019174	Main Bearing	3	Upper 1, 3 and 5
	6	3019180	Main Bearing	3	Lower 1, 3 and 5
	7	3019186	Main Bearing	3	Upper 2, 4 and 6
	8	3019192	Main Bearing	3	Lower 2, 4 and 6
	9	3019198	Main Bearing	1	Upper 7
	10	3019204	Main Bearing	1	Lower 7
	11	3067568	Thrust Bearing	4	
	12	3009213	Lock Plate	14	Not used on N14
		3801261	Main Bearing 0.010 Set	1	0.010 inch oversize
		3801262	Main Bearing 0.020 Set	1	0.020 inch oversize
		3801263	Main Bearing 0.030 Set	1	0.030 inch oversize
		3801264	Main Bearing 0.040 Set	1	0.040 inch oversize
		3074361	Thrust Bearing	A/R	0.010 Inch Oversize
		3074362	Thrust Bearing	A/R	0.020 Inch Oversize

© 2019 Cummins Inc., Box 3005, Columbus, IN 47202-3005 U.S.A.
Terms of Use and Disclaimers | Recommended System Requirements
Need Assistance? Please click on the Contact Us button in the top right corner of any page.

Parts Catalog - Option Detail

Electronic Parts Catalog - Option Detail				
Option	**Group**	**Graphic**	**Film Card**	**Date**
BP1126	01.02	bb100ga	F	15-SEP-94
Engines	NH/NT 855, NT495, NT743, NTA855 N106			

©Cummins Inc

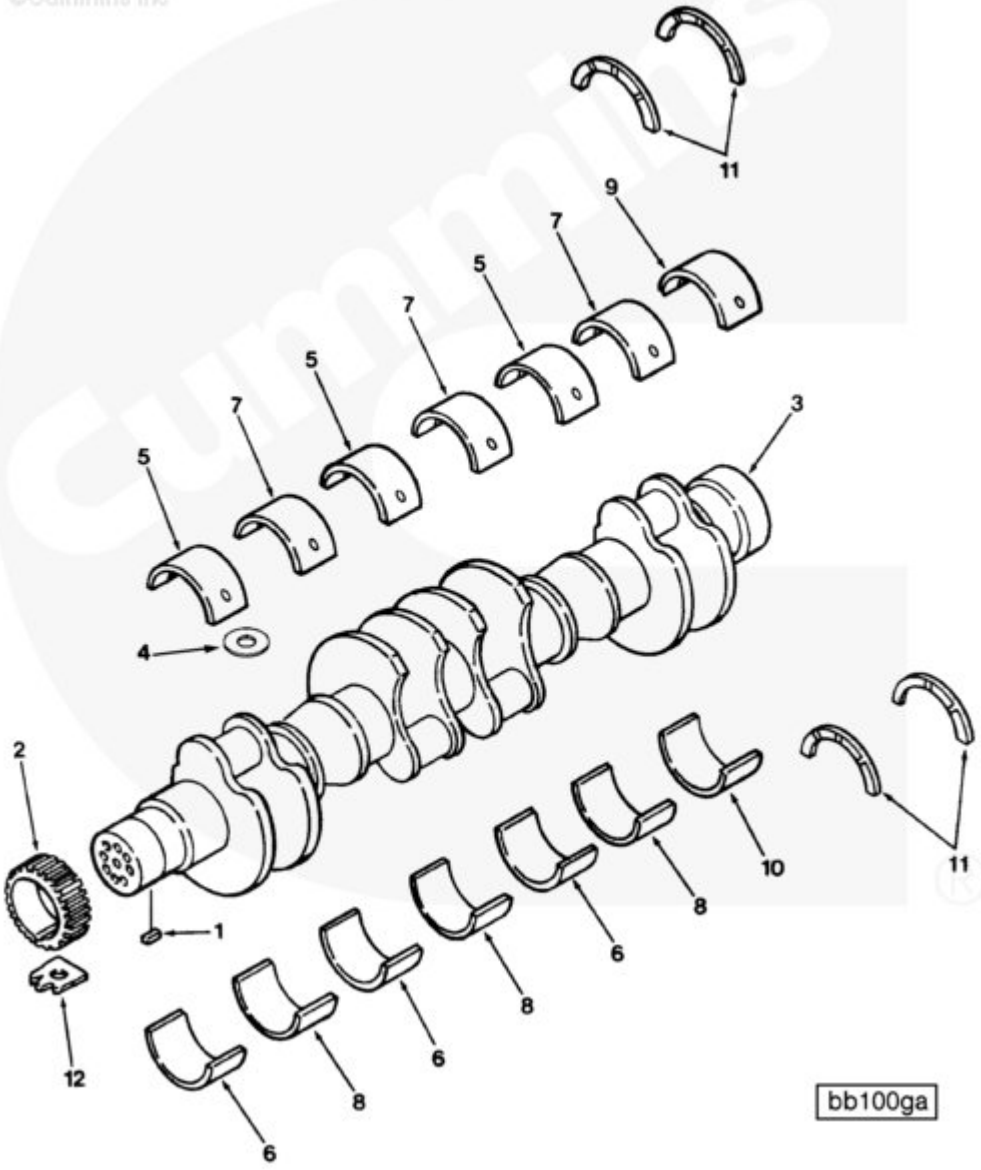

SMALL | MEDIUM | LARGE

Cart	Ref No	Part Number	Part Description	Required	Remarks
View My Cart					
		BP1126	Crankshaft And Main Bearings		

					Crankshaft
	1	210179	Rectangular Key	1	
	2	3014614	Crankshaft Gear	1	
	3	3608833	Engine Crankshaft	1	
	4	3037045	Ring Dowel	7	
		3801260	Main Bearing-Standard Set	1	Standard
	5	3019174	Main Bearing	3	Upper 1, 3 and 5
	6	3019180	Main Bearing	3	Lower 1, 3 and 5
	7	3019186	Main Bearing	3	Upper 2, 4 and 6
	8	3019192	Main Bearing	3	Lower 2, 4 and 6
	9	3019198	Main Bearing	1	Upper 7
	10	3019204	Main Bearing	1	Lower 7
	11	3067568	Thrust Bearing	4	
	12	3009213	Lock Plate	14	Not used on N14
		3801261	Main Bearing 0.010 Set	1	0.010 inch oversize
		3801262	Main Bearing 0.020 Set	1	0.020 inch oversize
		3801263	Main Bearing 0.030 Set	1	0.030 inch oversize
		3801264	Main Bearing 0.040 Set	1	0.040 inch oversize
		3074361	Thrust Bearing	A/R	0.010 Inch Oversize
		3074362	Thrust Bearing	A/R	0.020 Inch Oversize

© 2019 Cummins Inc., Box 3005, Columbus, IN 47202-3005 U.S.A.
Terms of Use and Disclaimers | Recommended System Requirements
Need Assistance? Please click on the Contact Us button in the top right corner of any page.

Parts Catalog - Option Detail

Electronic Parts Catalog - Option Detail				
Option	**Group**	**Graphic**	**Film Card**	**Date**
PP413	02.01.1	ch100gc	F	15-SEP-95
Engines	NH/NT 855, NT495, NT743, NTA855 N106			

©Cummins Inc

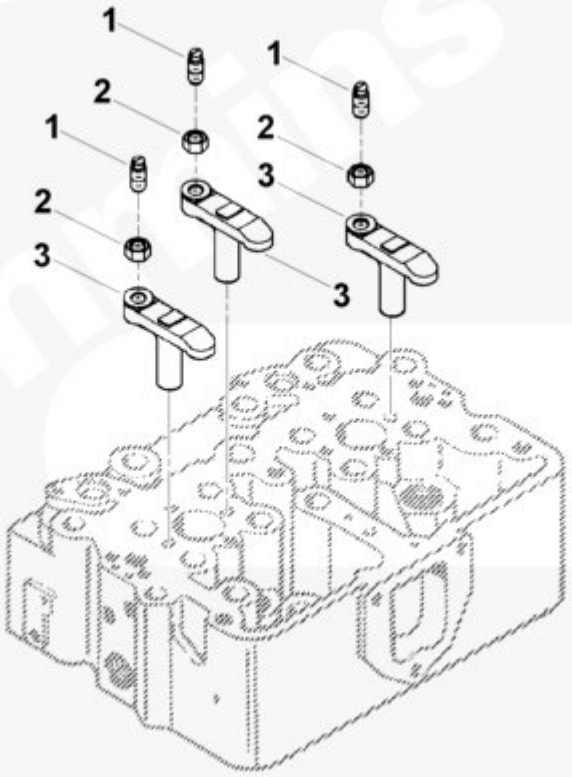

ch100gc

SMALL | MEDIUM | LARGE

Cart	Ref No	Part Number	Part Description	Required	Remarks
View My Cart					
		PP413	Crosshead		
					Crosshead
☐		3030038	Valve Crosshead	12	
☐	1	147389	Crosshead Adjusting Screw	1	3/8 - 24 x 3/4 inch
☐	2	203131	Heavy Hexagon Nut	1	3/8 - 24 UNF
	3	3028293	Valve Crosshead	1	

© 2019 Cummins Inc., Box 3005, Columbus, IN 47202-3005 U.S.A.
Terms of Use and Disclaimers | Recommended System Requirements
Need Assistance? Please click on the Contact Us button in the top right corner of any page.

Parts Catalog - Option Detail

Electronic Parts Catalog - Option Detail				
Option	**Group**	**Graphic**	**Film Card**	**Date**
BP1126	01.01	ck100gu	F	15-SEP-94
Engines	NH/NT 855, NT495, NT743, NTA855 N106			

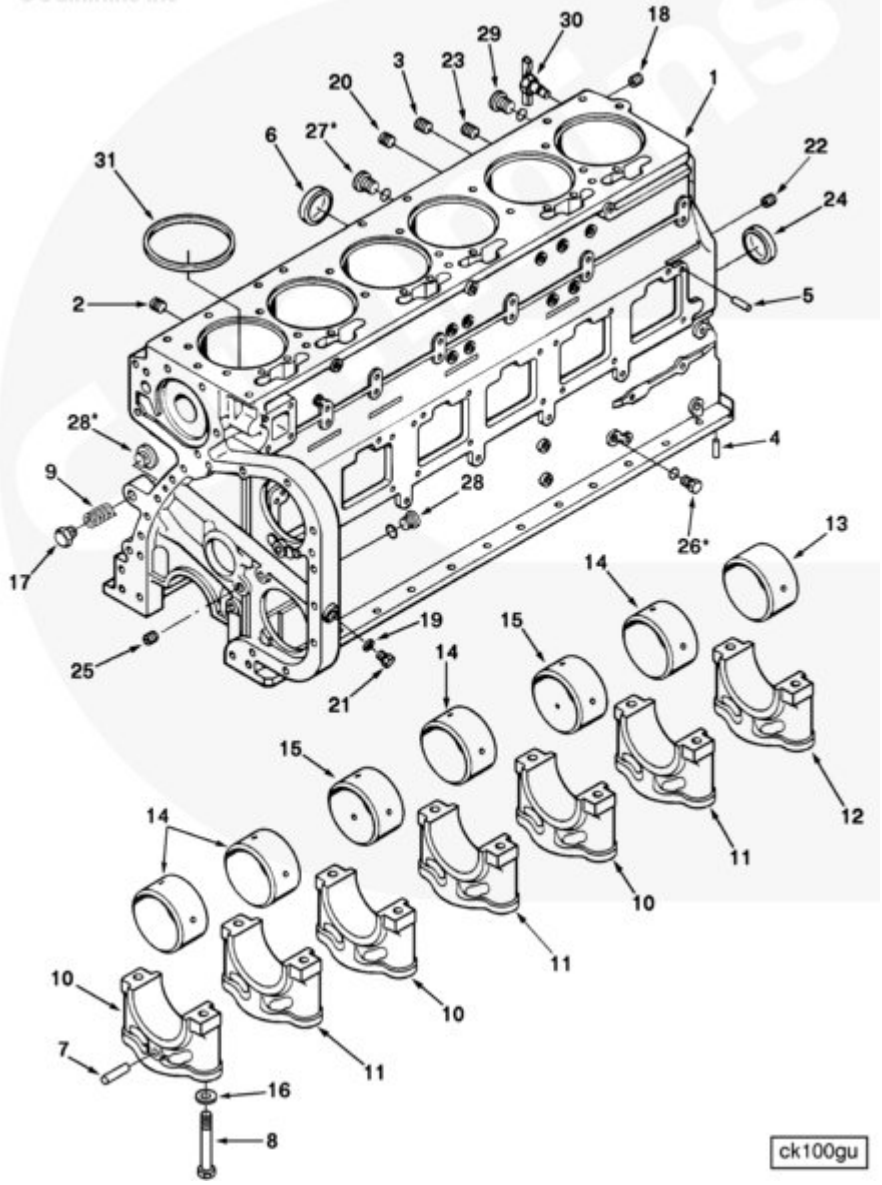

SMALL | MEDIUM | LARGE

Cart	Ref No	Part Number	Part Description	Required	Remarks
View My Cart					
		BP1126	Cylinder Block		

					Cylinder Block
					Base parts for naturally
					aspirated Big Cam I 855
					Industrial engines. Includes
					soft block. Does not include
					piston cooling. Do not use
					with Cummins two cylinder
					compressor (cam follower
					interferance). For Brazil,
					use AR87259 in place of
					AR3315 and AR87260 in place
					of 3004924.
☐		3081284	Cylinder Block		
	1	3081281	Cylinder Block	1	
☐	2	S 908	Pipe Plug	1	3/8 NPT
☐	3	S 910 B	Pipe Plug	1	1/4 NPT.
☐	4	67211	Pin Dowel	2	
☐	5	68585	Pin Dowel	6	
☐	6	147416	Expansion Plug	6	
☐	7	202903	Roll Pin	2	
☐	8	208346	Hexagon Head Cap Screw	14	3/4 - 16 x 6 5/8 in.
☐	9	213206	Piston Cooling Plug Spring	1	
☐	10	3008047	Main Bearing Cap	3	
☐	11	3008048	Main Bearing Cap	3	
☐	12	3008049	Main Bearing Cap	1	
☐	13	3011951	Bushing	1	No. 7
☐	14	3028075	Bushing	4	No. 1, 2, 4 and 6
☐	15	3028269	Bushing		
☐	16	3046246	Plain Washer	14	3/4 inch

☐	17	3068100	Orifice Plug	1	
☐	18	S 966 E	Pipe Plug	1	1 1/2 NPT
☐	19	66292	Plain Washer	1	7/8 in.
☐	20	3025458	Pipe Plug	4	1/8 NPT.
☐	21	210884	Threaded Plug	1	7/8 - 18 UNS
☐	23	3008468	Pipe Plug	3	1/2 NPT.
☐	24	3011952	Expansion Plug	1	
☐	25	3013786	Pipe Plug	3	3/8 NPT.
☐	26	3037536	Threaded Plug	2	9/16 - 18 UNF
☐	27	3040818	Threaded Plug	2	1 3/16 - 12 UN
☐	28	3046202	Threaded Plug	4	3/4 - 16 UNF.
☐	29	3071181	Threaded Plug	1	3/8 - 24 UNF
☐		3065118	Plain Adapter Elbow	1	
☐	30	3087690	Draincock	1	
☐		3037537	O-Ring Seal	1	
☐		3087691	Draincock	1	
☐	31	3054948	Liner Seal Ring	6	
					*Hardware kit that
					accompanies the block
					assembly. Refer to Topic
					90T1-7.
☐		3801106	Camshaft Bushing Kit	1	
		3800219	Kit , Pdc Cam Shaft Bushing	1	
☐		3011951	Bushing	1	
☐		3028075	Bushing	4	
☐		3028269	Bushing	2	

© 2019 Cummins Inc., Box 3005, Columbus, IN 47202-3005 U.S.A.
Terms of Use and Disclaimers | Recommended System Requirements
Need Assistance? Please click on the Contact Us button in the top right corner of any page.

Parts Catalog - Option Detail

Electronic Parts Catalog - Option Detail				
Option	**Group**	**Graphic**	**Film Card**	**Date**
BP1126	01.01	ck100gu	F	15-SEP-94
Engines	NH/NT 855, NT495, NT743, NTA855 N106			

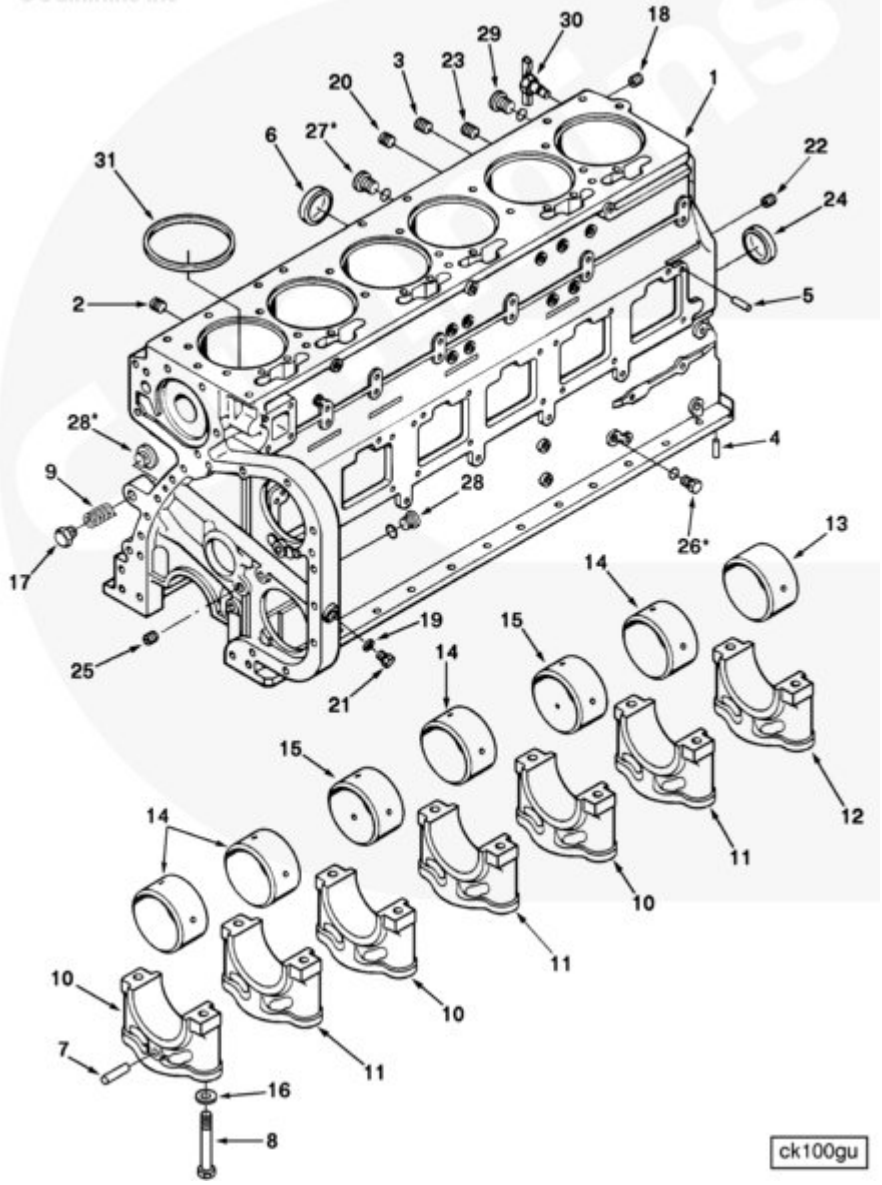

SMALL | MEDIUM | LARGE

Cart	Ref No	Part Number	Part Description	Required	Remarks
View My Cart					
		BP1126	Cylinder Block		

					Cylinder Block
					Base parts for naturally
					aspirated Big Cam I 855
					Industrial engines. Includes
					soft block. Does not include
					piston cooling. Do not use
					with Cummins two cylinder
					compressor (cam follower
					interferance). For Brazil,
					use AR87259 in place of
					AR3315 and AR87260 in place
					of 3004924.
☐		3081284	Cylinder Block		
	1	3081281	Cylinder Block	1	
☐	2	S 908	Pipe Plug	1	3/8 NPT
☐	3	S 910 B	Pipe Plug	1	1/4 NPT.
☐	4	67211	Pin Dowel	2	
☐	5	68585	Pin Dowel	6	
☐	6	147416	Expansion Plug	6	
☐	7	202903	Roll Pin	2	
☐	8	208346	Hexagon Head Cap Screw	14	3/4 - 16 x 6 5/8 in.
☐	9	213206	Piston Cooling Plug Spring	1	
☐	10	3008047	Main Bearing Cap	3	
☐	11	3008048	Main Bearing Cap	3	
☐	12	3008049	Main Bearing Cap	1	
☐	13	3011951	Bushing	1	No. 7
☐	14	3028075	Bushing	4	No. 1, 2, 4 and 6
☐	15	3028269	Bushing		
☐	16	3046246	Plain Washer	14	3/4 inch

☐	17	3068100	Orifice Plug	1	
☐	18	S 966 E	Pipe Plug	1	1 1/2 NPT
☐	19	66292	Plain Washer	1	7/8 in.
☐	20	3025458	Pipe Plug	4	1/8 NPT.
☐	21	210884	Threaded Plug	1	7/8 - 18 UNS
☐	23	3008468	Pipe Plug	3	1/2 NPT.
☐	24	3011952	Expansion Plug	1	
☐	25	3013786	Pipe Plug	3	3/8 NPT.
☐	26	3037536	Threaded Plug	2	9/16 - 18 UNF
☐	27	3040818	Threaded Plug	2	1 3/16 - 12 UN
☐	28	3046202	Threaded Plug	4	3/4 - 16 UNF.
☐	29	3071181	Threaded Plug	1	3/8 - 24 UNF
☐		3065118	Plain Adapter Elbow	1	
☐	30	3087690	Draincock	1	
☐		3037537	O-Ring Seal	1	
☐		3087691	Draincock	1	
☐	31	3054948	Liner Seal Ring	6	
					*Hardware kit that
					accompanies the block
					assembly. Refer to Topic
					90T1-7.
☐		3801106	Camshaft Bushing Kit	1	
		3800219	Kit , Pdc Cam Shaft Bushing	1	
☐		3011951	Bushing	1	
☐		3028075	Bushing	4	
☐		3028269	Bushing	2	

© 2019 Cummins Inc., Box 3005, Columbus, IN 47202-3005 U.S.A.
Terms of Use and Disclaimers | Recommended System Requirements
Need Assistance? Please click on the Contact Us button in the top right corner of any page.

Parts Catalog - Option Detail

Electronic Parts Catalog - Option Detail				
Option	**Group**	**Graphic**	**Film Card**	**Date**
PP413	02.01	kn100gw	F	30-MAR-97
Engines	NH/NT 855, NT495, NT743, NTA855 N106			

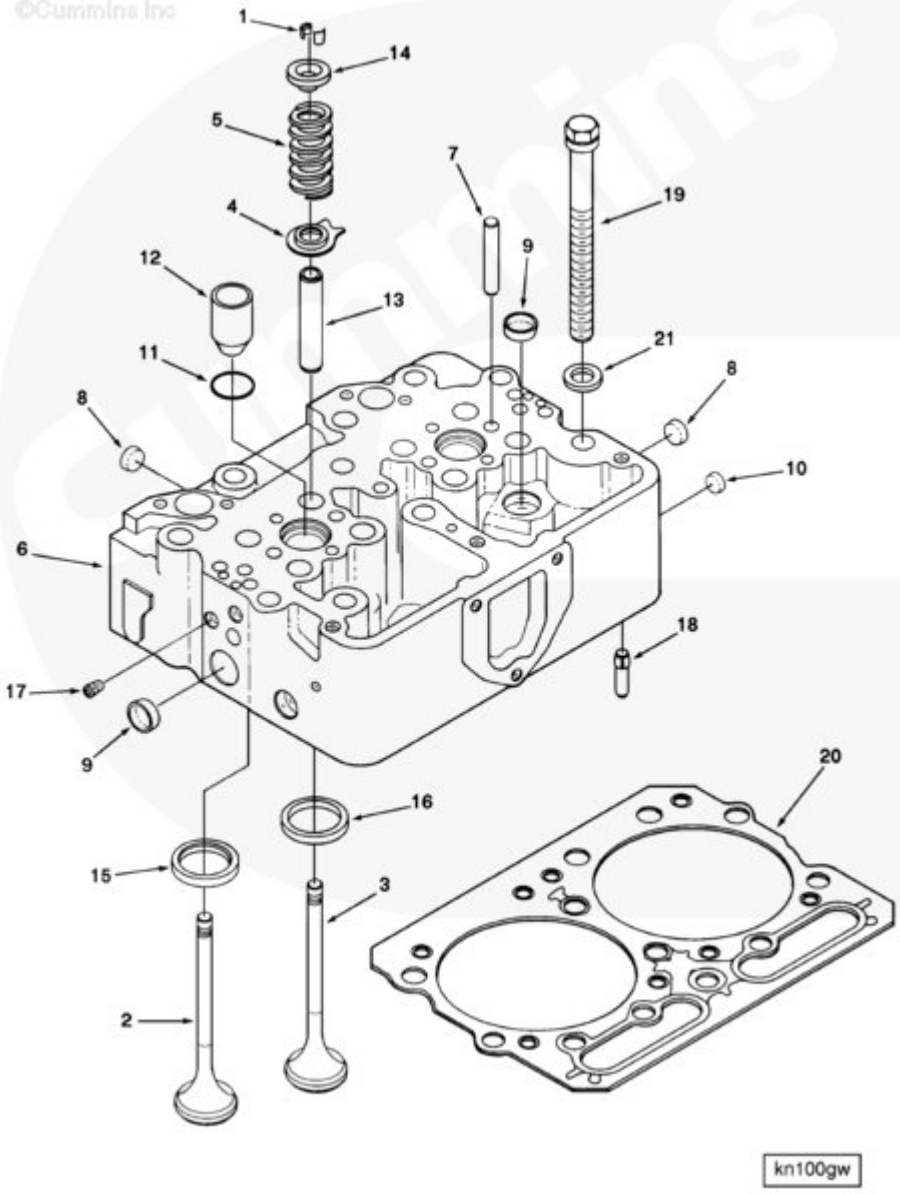

SMALL | MEDIUM | LARGE

Cart	Ref No	Part Number	Part Description	Required	Remarks
View My Cart					
		PP413	Cylinder Head		

					Cylinder Head
☐		3075421	Cylinder Head	3	
☐	1	127554	Valve Collet	16	
	2	135957	Intake Valve	4	Serviced as 3803512.
☐	3	145701	Exhaust Valve	4	
☐	4	170296	Valve Spring Guide	8	
☐	5	211999	Valve Spring	8	
☐		3007833	Cylinder Head	1	
	6	3201880	Cylinder Head	1	
☐	7	123558	Valve Crosshead Guide	4	
☐	8	3007634	Expansion Plug	3	
☐	9	3007635	Expansion Plug	8	1 inch
☐	10	3007636	Expansion Plug	2	32.1 mm
☐	11	3007759	O-Ring Seal	2	
☐	12	3070486	Injector Sleeve	2	
☐	13	3006456	Valve Stem Guide	8	
☐	14	3042745	Valve Spring Guide	8	
☐	15	3017759	Valve Insert	4	
☐	16	3017759	Valve Insert	4	
☐	17	S 911 B	Pipe Plug	10	1/8 NPT
☐	18	68445	Groove Pin	6	
☐	19	3071161	Hexagon Head Cap Screw	36	11/16 - 16 x 7 1/4 in.
☐	20	3349818	Cylinder Head Gasket	1	
☐	21	3071075	Plain Washer	36	5/8 in.

© 2019 Cummins Inc., Box 3005, Columbus, IN 47202-3005 U.S.A.
Terms of Use and Disclaimers | Recommended System Requirements
Need Assistance? Please click on the Contact Us button in the top right corner of any page.

Parts Catalog - Option Detail

Electronic Parts Catalog - Option Detail				
Option	**Group**	**Graphic**	**Film Card**	**Date**
BP1126	01.01.1	bb100gb	F	15-SEP-94
Engines	NH/NT 855, NT495, NT743, NTA855 N106			

©Cummins Inc

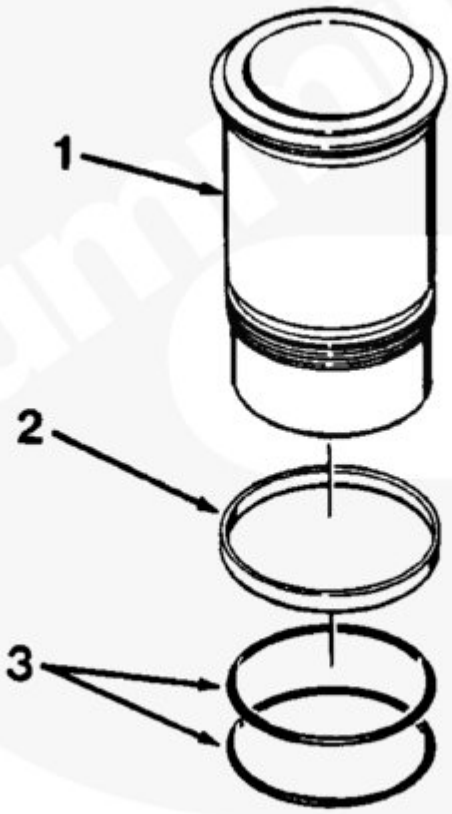

bb100gb

SMALL | MEDIUM | LARGE

Cart	Ref No	Part Number	Part Description	Required	Remarks
View My Cart					
		BP1126	Cylinder Liner Kit		
					Cylinder Liner Kit

☐		3801826	Cylinder Liner Kit	6	
	1	3055099	Cylinder Liner	1	
☐	2	215090	Rectangular Ring Seal	1	
☐	3	3032874	O-Ring Seal	2	

© 2019 Cummins Inc., Box 3005, Columbus, IN 47202-3005 U.S.A.
Terms of Use and Disclaimers | Recommended System Requirements
Need Assistance? Please click on the Contact Us button in the top right corner of any page.

Parts Catalog - Option Detail

Electronic Parts Catalog - Option Detail				
Option	**Group**	**Graphic**	**Film Card**	**Date**
BP1126	01.01.1	bb100gb	F	15-SEP-94
Engines	NH/NT 855, NT495, NT743, NTA855 N106			

©Cummins Inc

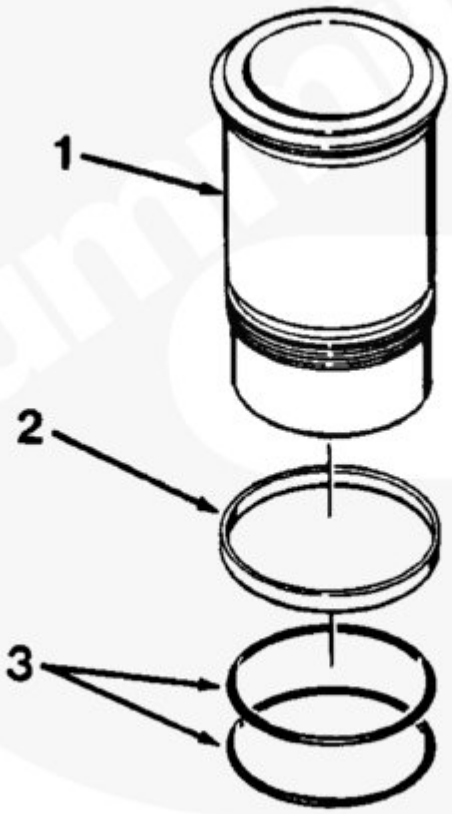

bb100gb

SMALL | MEDIUM | LARGE

Cart	Ref No	Part Number	Part Description	Required	Remarks
View My Cart					
		BP1126	Cylinder Liner Kit		
					Cylinder Liner Kit

☐		3801826	Cylinder Liner Kit	6	
	1	3055099	Cylinder Liner	1	
☐	2	215090	Rectangular Ring Seal	1	
☐	3	3032874	O-Ring Seal	2	

© 2019 Cummins Inc., Box 3005, Columbus, IN 47202-3005 U.S.A.
Terms of Use and Disclaimers | Recommended System Requirements
Need Assistance? Please click on the Contact Us button in the top right corner of any page.

Parts Catalog - Option Detail

Electronic Parts Catalog - Option Detail				
Option	**Group**	**Graphic**	**Film Card**	**Date**
PP1725	01.06.1	ap100gd	F	15-MAY-95
Engines	NH/NT 855, NT495, NT743, NTA855 N106			

©Cummins Inc

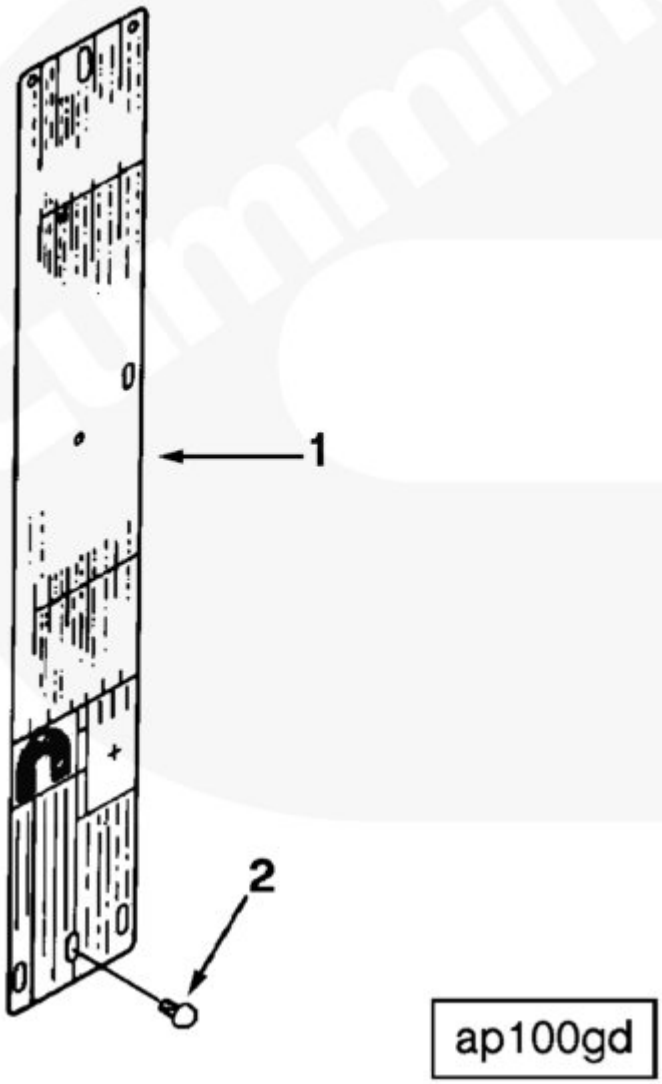

SMALL | MEDIUM | LARGE

Cart	Ref No	Part Number	Part Description	Required	Remarks
View My Cart					
		PP1725	Dataplate		

					Dataplate
					Dataplate for N-855-M
					dependent option for use with
					PP0413. For Brazil use
					3355065 in place of 3077274.
					UK use 3254815 in place of
					3027290. UK use 3027291 for
					USA market.
☐	1	3027290	Dataplate	1	
☐	2	3056508	Drive Screw	3	

© 2019 Cummins Inc., Box 3005, Columbus, IN 47202-3005 U.S.A.
Terms of Use and Disclaimers | Recommended System Requirements
Need Assistance? Please click on the Contact Us button in the top right corner of any page.

Parts Catalog - Option Detail

Electronic Parts Catalog - Option Detail				
Option	**Group**	**Graphic**	**Film Card**	**Date**
EM1093	01.09	em103gy	F	15-FEB-95
Engines	NH/NT 855, NT495, NT743, NTA855 N106			

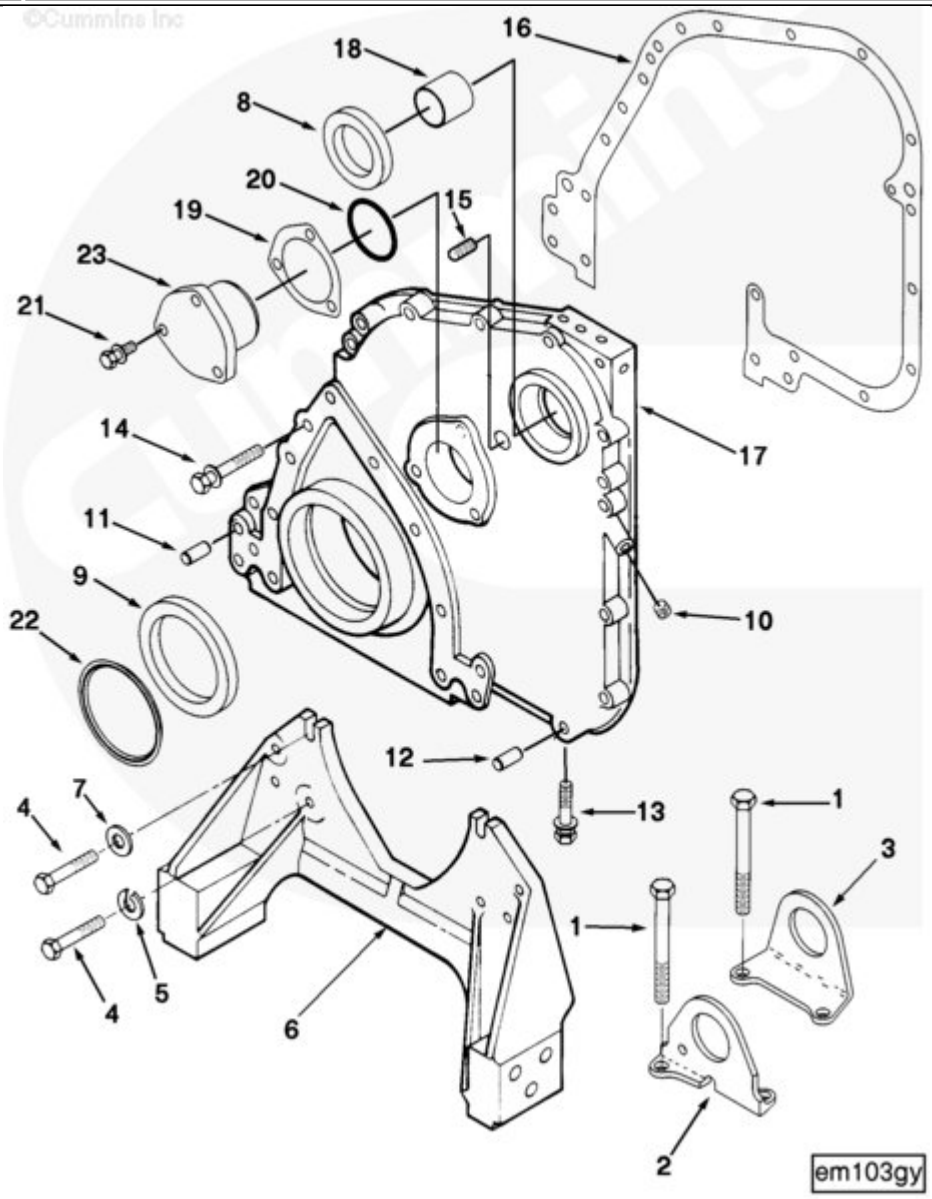

SMALL | MEDIUM | LARGE

Cart	Ref No	Part Number	Part Description	Required	Remarks
View My Cart					
		EM1093	Engine Mounting		

					Engine Mounting
					Wide span marine pad type
					front support having pads
					with multiple tapped holes
					that duplicate location of
					lower flywheel housing pads.
					Compatible with marine
					mounting feet. Includes bare
					engine lifting brackets and
					special marine type cast
					iron gear cover. Can only be
					used with damper arrangements
					that have the sea water pump
					driving pulley. Lifting
					brackets located between
					front and middle rocker arm
					cover and back of rear
					rocker arm cover.
☐	1	S 176	Hexagon Head Cap Screw	4	1/2 - 13 x 5 in.
☐	2	170226	Lifting Bracket	1	
☐	3	3001726	Lifting Bracket	1	
☐	4	S 169 B	Hexagon Head Cap Screw	8	7/16 - 20 X 3 3/4 Inch.
☐	5	S 610	Lock Washer	6	7/16 in.
☐	6	3010347	Front Engine Support	1	
☐	7	3600283	Plain Washer	2	3/8 in.
☐	8	3020185	Oil Seal	1	
		3020186	Oil Seal	1	
☐	9	3020183	Oil Seal	1	
☐	10	S 911 B	Pipe Plug	2	1/8 NPT

☐	11	60408	Pin Dowel	1	
☐	12	70653	Diamond Dowel	1	
☐	13	3011711	Captive Washer Cap Screw	7	7/16 - 20 X 2 Inch.
☐	14	3011714	Captive Washer Cap Screw	13	7/16 - 20 X 3 Inch.
☐	15	3013786	Pipe Plug	1	3/8 NPT.
☐	16	3067618	Gear Cover Gasket	1	
☐	17	3036125	Gear Cover	1	
☐		3351284	Gear Cover	1	
☐	18	132770	Bushing	1	
		3060301	Cam Thrust Mounting Support		
☐	19	65259 A	Shim	1	
☐	19	65259 B	Shim	1	
☐	19	65259 C	Shim	1	
☐	19	185573	Shim	1	
☐	20	215705	O-Ring Seal	1	
☐	21	3011715	Captive Washer Cap Screw	3	3/8 - 16 X 1 3/16 in.
☐	22	3076203	Dust Seal	1	
☐	23	3008530	Camshaft Thrust Support	1	

© 2019 Cummins Inc., Box 3005, Columbus, IN 47202-3005 U.S.A.
Terms of Use and Disclaimers | Recommended System Requirements
Need Assistance? Please click on the Contact Us button in the top right corner of any page.

Parts Catalog - Option Detail

Electronic Parts Catalog - Option Detail				
Option	**Group**	**Graphic**	**Film Card**	**Date**
EM1093	01.09	em103gy	F	15-FEB-95
Engines	NH/NT 855, NT495, NT743, NTA855 N106			

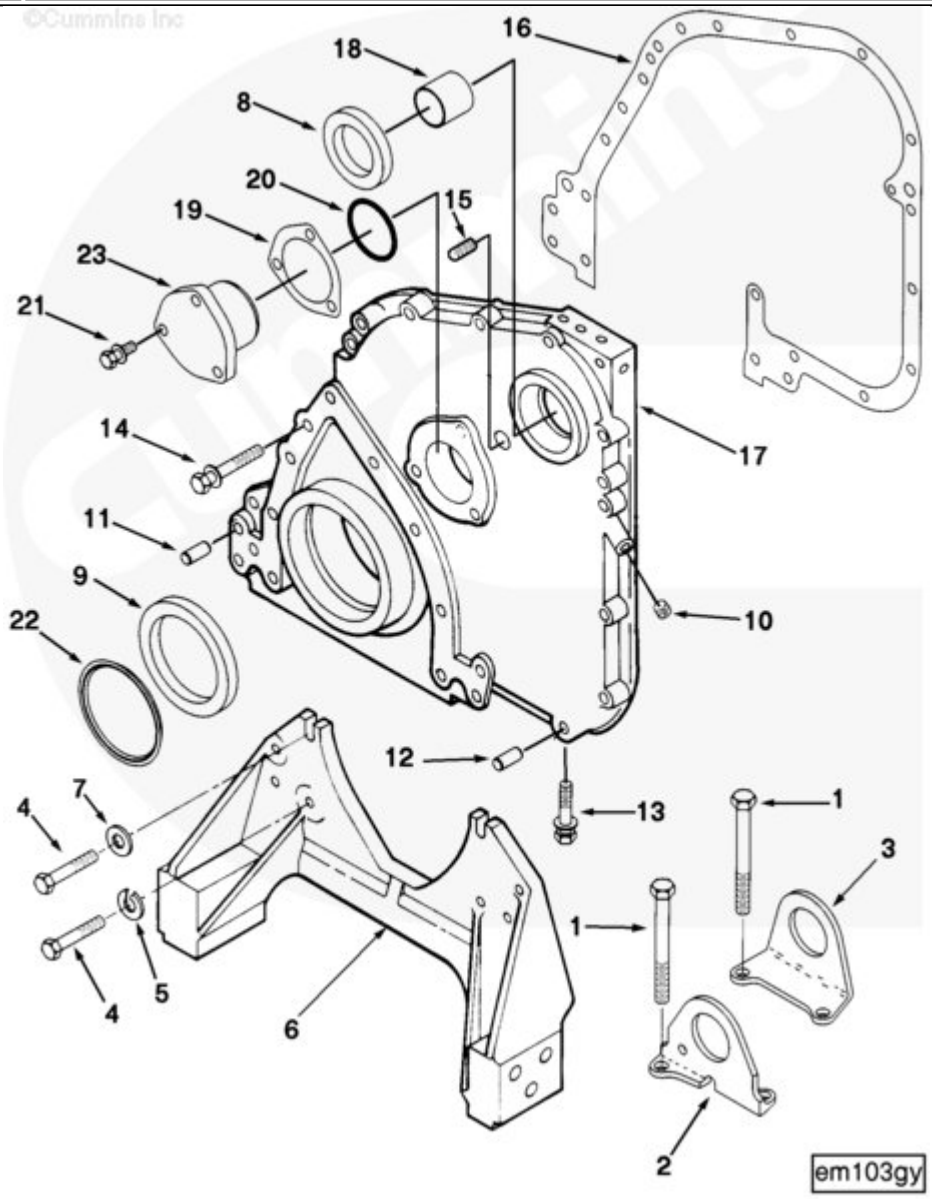

SMALL | MEDIUM | LARGE

Cart	Ref No	Part Number	Part Description	Required	Remarks
View My Cart					
		EM1093	Engine Mounting		

					Engine Mounting
					Wide span marine pad type
					front support having pads
					with multiple tapped holes
					that duplicate location of
					lower flywheel housing pads.
					Compatible with marine
					mounting feet. Includes bare
					engine lifting brackets and
					special marine type cast
					iron gear cover. Can only be
					used with damper arrangements
					that have the sea water pump
					driving pulley. Lifting
					brackets located between
					front and middle rocker arm
					cover and back of rear
					rocker arm cover.
☐	1	S 176	Hexagon Head Cap Screw	4	1/2 - 13 x 5 in.
☐	2	170226	Lifting Bracket	1	
☐	3	3001726	Lifting Bracket	1	
☐	4	S 169 B	Hexagon Head Cap Screw	8	7/16 - 20 X 3 3/4 Inch.
☐	5	S 610	Lock Washer	6	7/16 in.
☐	6	3010347	Front Engine Support	1	
☐	7	3600283	Plain Washer	2	3/8 in.
☐	8	3020185	Oil Seal	1	
		3020186	Oil Seal	1	
☐	9	3020183	Oil Seal	1	
☐	10	S 911 B	Pipe Plug	2	1/8 NPT

☐	11	60408	Pin Dowel	1	
☐	12	70653	Diamond Dowel	1	
☐	13	3011711	Captive Washer Cap Screw	7	7/16 - 20 X 2 Inch.
☐	14	3011714	Captive Washer Cap Screw	13	7/16 - 20 X 3 Inch.
☐	15	3013786	Pipe Plug	1	3/8 NPT.
☐	16	3067618	Gear Cover Gasket	1	
☐	17	3036125	Gear Cover	1	
☐		3351284	Gear Cover	1	
☐	18	132770	Bushing	1	
		3060301	Cam Thrust Mounting Support		
☐	19	65259 A	Shim	1	
☐	19	65259 B	Shim	1	
☐	19	65259 C	Shim	1	
☐	19	185573	Shim	1	
☐	20	215705	O-Ring Seal	1	
☐	21	3011715	Captive Washer Cap Screw	3	3/8 - 16 X 1 3/16 in.
☐	22	3076203	Dust Seal	1	
☐	23	3008530	Camshaft Thrust Support	1	

© 2019 Cummins Inc., Box 3005, Columbus, IN 47202-3005 U.S.A.
Terms of Use and Disclaimers | Recommended System Requirements
Need Assistance? Please click on the Contact Us button in the top right corner of any page.