PARTS CATALOG

ENGINE MODEL : KTA50

C P L : 2354





http://www.cummins.com

Copyright © 2000 - 2017 Cummins Inc.
All rights reserved.

QuickServe Online

Table of Contents

OPTION	REPAIR GROUP	GROUP NAME	PAGE
4352581	17.02		5
AD6005-02	09.03	Accessory Drive Cover	7
PU6003	09.03	Accessory Drive Pulley	8
FP6771	05.01.6	Actuator	10
PP2354-02	10.01	Aftercooler Core	11
PP2354-04	10.01.1	Aftercooler Plumbing	13
AP6129	01.06.1	Agency Approval	16
IM6726-03	10.01	Air Intake Manifold Mounting	17
EE6065-04	13.02	Alternator	18
EE6021	13.02.3	Alternator Mounting	19
HD6011-01	12.04	Auxiliary Pump Mounting	21
BP6126-12	01.01	Base Parts	23
OB6722	03.02	Breather Mounting	26
BP6126-04	04.03	Cam Follower Housing	27
PP2354-02	01.07	Camshaft And Gear	29
BP6126-01	01.07.2	Camshaft Gear Mounting	31
WF6023-12	08.08	Corrosion Resistor	32
BP6728-05	01.02	Crankshaft	34
PP2354-03	02.01	Cylinder Head	35
PP2354-05	02.01.1	Cylinder Head	36
PP6908-02	01.04	Cylinder Head	38
PP6908	02.01	Cylinder Head	40
AP6705-01	01.06.1	Decorative Of Intercooler Documentation	42
LG6003-02	07.02	Dipstick	43
ES6004-01	13.10	Electric Starting Accessories	45
BP6126-02	16.01	Engine Barring Drive	47
XS6025-04	11.01.1	Exhaust Elbow	49
XM6021-06	11.01	Exhaust Manifold	50
XM6705	10.01	Exhaust Manifold	52
FA6028-02	08.03	Fan Drive	53
OB6179-06	07.02	Filler And Breather	56
OB6787-01	07.02	Filler And Breather	58
FW6009	16.02	Flywheel	59
FH6024-07	16.01	Flywheel Housing	60
EM6001	16.03	Front Engine Support	62
FA6745-01	08.03	Front Gear Housing	63
FS6013-02	06.08	Fuel Block	65
FF6063-08	06.04	Fuel Filter	67
FF6736-01	06.04.1	Fuel Filter Plumbing	69
FP6771	05.01.4	Fuel Gear Pump	71

OPTION	REPAIR GROUP	GROUP NAME	PAGE
BP6739-13	06.01.6	Fuel Manifold	73
FP6180-01	05.01	Fuel Pump	76
FP6771-04	05.01	Fuel Pump	78
FP6771	05.01.3	Fuel Pump And Damper Mounting	80
FP6771	05.01.2	Fuel Pump Front Cover	81
FP6771	05.01.1	Fuel Pump Housing	83
FP6180-01	05.03	Fuel Pump Mounting	86
FR6243	99.01	Fuel Rating	87
FT60072-05	06.03	Fuel Supply Plumbing	88
FV6020-01	05.06	Fuel Valve	90
FV6707-03	05.06	Fuel Valve Mounting	92
3804300	17.02	Gasket Sets	94
4352579	17.02	Gasket Sets	96
FA6703-01	01.06	Gear Cover And Housing	97
OB6723-03	07.02	Hand Hole Cover	99
PP2354-04	06.01	Injector	101
BP6126-02	06.01.5	Injector Mounting	104
IM6021-04	10.01	Intake Manifold	105
PP2354-06	06.03	Left Bank Oil Control Connection	107
BP6126	17.06	Lifting Bracket	109
BP6126-06	07.05	Lubricating Oil Cooler	110
LF6026-06	07.03	Lubricating Oil Filter	111
BP6126-03	07.06	Lubricating Oil Pump	113
OP6710	07.06.1	Lubricating Oil Pump	115
FH8711-02	16.01.1	Magnetic Pickup	117
BP6126-02	01.02.1	Main Bearings	119
PP2354	01.06.1	Nameplate Mounting	122
FP6180	05.13	No Description Available	123
OF6009-06	07.03	Oil Bypass Filter	124
PP2354	06.03.2	Oil Control Connection	126
OP6027-08	07.01	Oil Pan	128
OB6701-01	07.03.1	Oil Pan Plumbing	130
PP2354-01	07.04	Oil Supply Connection	131
LF6705-07	07.04	Oil Transfer Connection	133
SS6033-05	03.01	Paint	135
PP2354-06	01.04	Performance Parts	136
ST6733	13.05	Prelub Plumbing	138
PP2354-04	06.03.1	Right Bank Oil Control Connection	139
PP2354-03	03.01	Rocker Housing	141
BP6126-06	03.01	Rocker Lever	143
BP6126	16.03.1	Shipping Bracket	145
ST6026-02	13.05	Starter	146
ST6705	13.05	Starter Mounting	148

OPTION	REPAIR GROUP	GROUP NAME	PAGE
PP2354-03	06.01.6	Step Oil Manifold	149
PP6818-01	01.04	Step Oil Supply Fitting	152
PP2354-03	06.01.1	Step Valve	154
PP2354-02	06.01.2	Step Valve Mounting	157
PP2354	06.01.3	Tappet	159
PP2354-05	10.06	Turbocharger	161
BP6126-04	10.06.1	Turbocharger Oil Supply Hose	164
4376343	17.01	Upper Engine Gasket Kit	166
DA6070	01.02.2	Vibration Damper	168
PP2354-04	07.05.1	Water Header	170
WI6002-06	08.07.1	Water Inlet Connection	172
WM6016-05	08.07.1	Water Manifold	174
WO6051-07	08.07.1	Water Outlet Connection	176
WO6705	08.07.1	Water Outlet Connection	178
BP6126-16	08.01	Water Pump	179

Parts Catalog - Option Detail

Electronic Parts Catalog - Option Detail				
Option	**Group**	**Graphic**	**Film Card**	**Date**
4352581	17.02	null	K50	08-APR-14
Engines	G50, K50, K50-DPM, QSK50 CM2150 K107, QSK50 CM2150 MCRS, QSK50 CM2350 K108, QSK50 CM850 MCRS, QSK50 DF CM850/CM2150 MCRS			

Cart	Ref No	Part Number	Part Description	Required	Remarks
View My Cart					
☐		4352581	Kit, Upper Engine Gasket	1	
☐		131026	O-Ring Seal	10	
☐		201048	Connection Gasket	4	
☐		201049	Connection Gasket	2	
☐		206277	Intake Manifold Gasket	16	
☐		206443	Thermostat Housing Gasket	2	
☐		206460	Connection Gasket	1	
☐		207515	Connection Gasket	1	
☐		216187	O-Ring Seal	2	
☐		3001340	O-Ring Seal	32	
☐		3003016	O-Ring Seal	10	
☐		3008710	Rectangular Ring Seal	8	
☐		3011580	Aftercooler Cover Gasket	4	
☐		3014304	Rectangular Ring Seal	32	
☐		3014449	Flange Gasket	4	
☐		3023066	O-Ring Seal	4	
☐		3023129	Dust Seal	2	
☐		3023130	Dust Seal	4	
☐		3026421	O-Ring Seal	8	
☐		3028291	O-Ring Seal	32	
☐		3037821	Exhaust Manifold Gasket	16	
☐		3084539	O-Ring Seal	32	
☐		3171368	Turbocharger Gasket	2	
☐		3175517	Flange Gasket	2	
☐		3179026	Connection Gasket	24	
☐		3179026	Connection Gasket	4	
☐		3179027	Connection Gasket	8	

		3627961	Thermostat Seal	4	
		3630839	Rocker Lever Housing Gasket	16	
		3818885	O-Ring Seal	2	
		4066112	O-Ring Seal	6	
		4334080	Cylinder Head Gasket	16	
		4920076	Rocker Lever Cover Gasket	16	

© 2017 Cummins Inc., Box 3005, Columbus, IN 47202-3005 U.S.A.
Terms of Use and Disclaimers | Recommended System Requirements
Need Assistance? Please click on the Contact Us button in the top right corner of any page.

Parts Catalog - Option Detail

Electronic Parts Catalog - Option Detail				
Option	**Group**	**Graphic**	**Film Card**	**Date**
AD6005-02	09.03	ad600gq	K50	05-APR-06
Engines	G50, K50, K50-DPM, QSK50 CM2150 K107, QSK50 CM2150 MCRS, QSK50 CM2350 K108, QSK50 CM850 MCRS, QSK50 DF CM850/CM2150 MCRS			

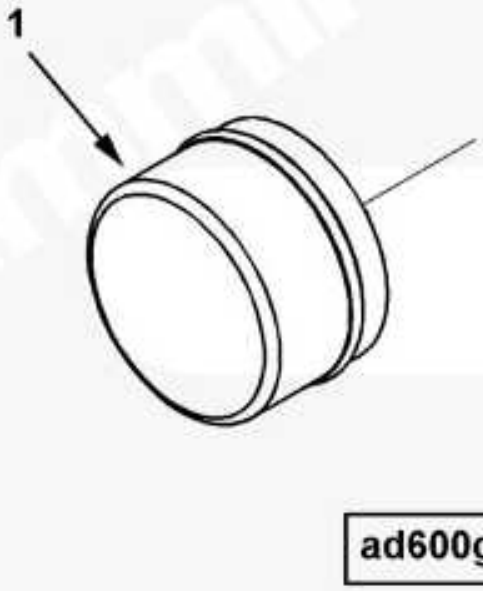

SMALL | MEDIUM | LARGE

Cart	Ref No	Part Number	Part Description	Required	Remarks
View My Cart					
		AD6005-02	Accessory Drive Cover		Steel cup to seal the opening...(More)
					in the
					Gear cover when an accessory
					drive pulley is not required.
					Mounted through the front
					gear cover, left bank side of
					the engine.
☐	1	3332255	Gear Cover Plug	1	

© 2017 Cummins Inc., Box 3005, Columbus, IN 47202-3005 U.S.A.
Terms of Use and Disclaimers | Recommended System Requirements
Need Assistance? Please click on the Contact Us button in the top right corner of any page.

Parts Catalog - Option Detail

Electronic Parts Catalog - Option Detail				
Option	**Group**	**Graphic**	**Film Card**	**Date**
PU6003	09.03	ad600gj	K50	30-JAN-96
Engines	G50, K50, K50-DPM, QSK50 CM2150 K107, QSK50 CM2150 MCRS, QSK50 CM2350 K108, QSK50 CM850 MCRS, QSK50 DF CM850/CM2150 MCRS			

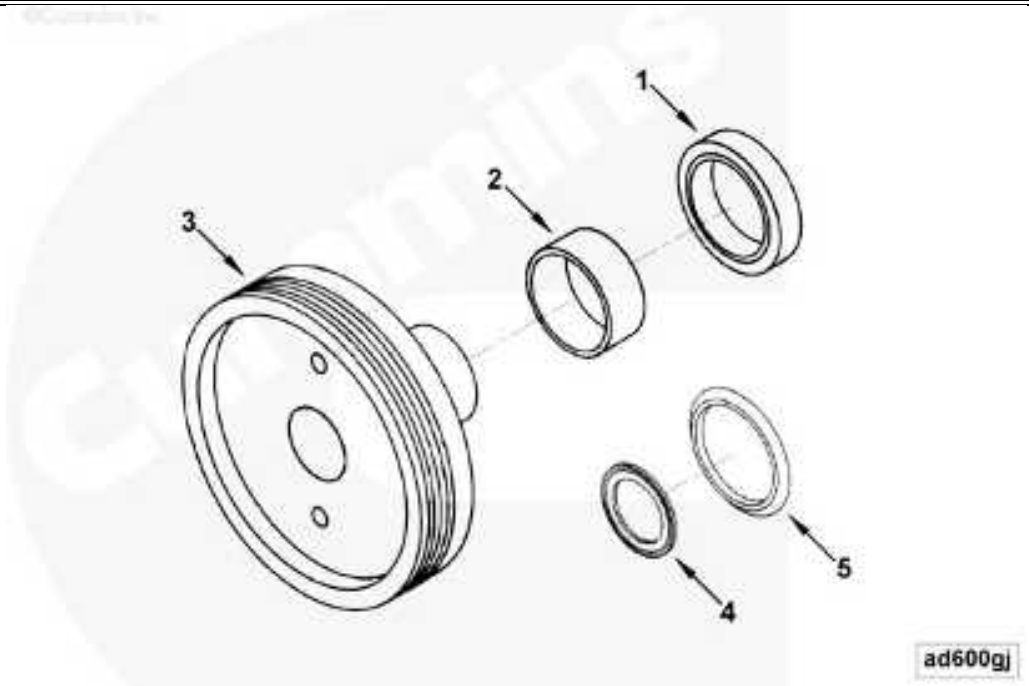

SMALL | MEDIUM | LARGE

Cart	Ref No	Part Number	Part Description	Required	Remarks
View My Cart					
		PU6003	Accessory Drive Pulley		Alternator drive pulley...(More)
					4.93 inch (125MM) diameter
					for 5 rib "K" section v-
					ribbed belt. Driven at
					1.68 times engine speed.
					For 2.62:1 ratio alternator
					drives. Mounted through
					the front gear cover,
					right bank side of engine.
☐	1	3628895	Oil Seal	1	
☐		3179944	Accessory Drive Pulley	1	
☐	2	3076346	Wear Sleeve	1	
	3	3628939	Accessory Drive Pulley	1	
☐	4	3200287	Keyway Seal	1	

	5	3628894	Dust Seal	1	
		3803852	Kit , Kv Pose Seal	1	
		190397	Wear Sleeve	1	
		3200287	Keyway Seal	1	
		3628894	Dust Seal	1	
		3628895	Oil Seal	1	

© 2017 Cummins Inc., Box 3005, Columbus, IN 47202-3005 U.S.A.
Terms of Use and Disclaimers | Recommended System Requirements
Need Assistance? Please click on the Contact Us button in the top right corner of any page.

Parts Catalog - Option Detail

Electronic Parts Catalog - Option Detail				
Option	**Group**	**Graphic**	**Film Card**	**Date**
FP6771	05.01.6	fp401gv	K50	31-DEC-83
Engines	G50, K50, K50-DPM, QSK50 CM2150 K107, QSK50 CM2150 MCRS, QSK50 CM2350 K108, QSK50 CM850 MCRS, QSK50 DF CM850/CM2150 MCRS			

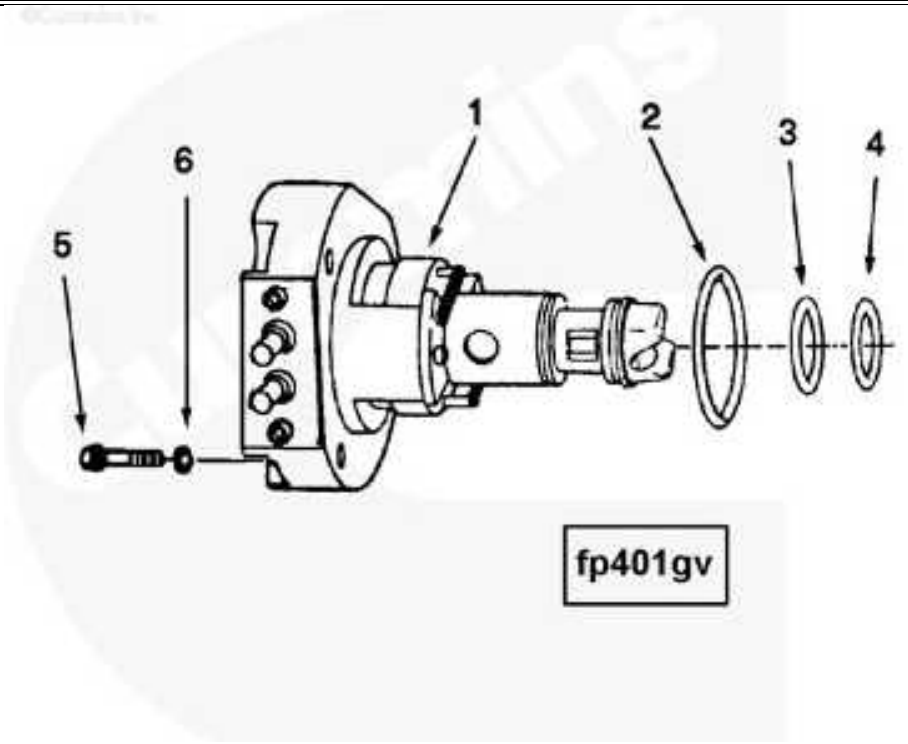

SMALL | MEDIUM | LARGE

Cart	Ref No	Part Number	Part Description	Required	Remarks
View My Cart					
		FP6771	Actuator		
☐	1	3408326	Electronic Fuel Control Actuator	1	
☐	2	3048182	O-Ring Seal	1	
☐	3	3042542	O-Ring Seal	1	
☐	4	3042542	O-Ring Seal	1	
☐	5	3017051	Captive Washer Cap Screw	3	1/4 - 20 X 1 1/8 in.
☐	6	70704	Plain Washer	3	1/4 in.

© 2017 Cummins Inc., Box 3005, Columbus, IN 47202-3005 U.S.A.
Terms of Use and Disclaimers | Recommended System Requirements
Need Assistance? Please click on the Contact Us button in the top right corner of any page.

Parts Catalog - Option Detail

Electronic Parts Catalog - Option Detail				
Option	**Group**	**Graphic**	**Film Card**	**Date**
PP2354-02	10.01	pp613gm	K50	08-AUG-14
Engines	G50, K50, K50-DPM, QSK50 CM2150 K107, QSK50 CM2150 MCRS, QSK50 CM2350 K108, QSK50 CM850 MCRS, QSK50 DF CM850/CM2150 MCRS			

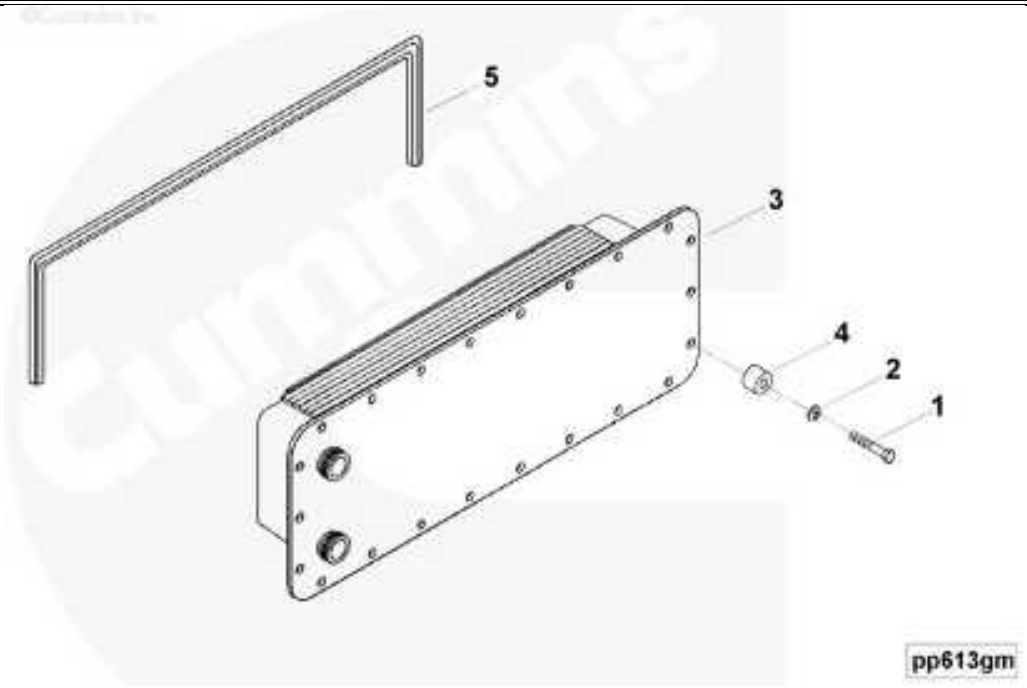

SMALL | MEDIUM | LARGE

Cart	Ref No	Part Number	Part Description	Required	Remarks
View My Cart					
		PP2354-02	Aftercooler Core		Aftercooler Core...(More)
					Certified Model Name:
					KTA50-G8
					CPL: 2354
					Certified By: None
					Engine Aspiration:
					Turbocharger
					Application: Power Generation
					Power Rating: Intermittent
					KTA-50G8 With LTA K-2000
					Technology.
					Less Water Pumps.
					For Standby, Prime and
					Continuous Applications.

	1	S 104	Hexagon Head Cap Screw	56	3/8 - 16 X 2 1/4 in.
	2	3036460	Spring Washer	56	
	3	3638360	Aftercooler Core	4	
	4	3626867	Mounting Spacer	50	
	5	3627381	Rectangular Strip Seal	4	

© 2017 Cummins Inc., Box 3005, Columbus, IN 47202-3005 U.S.A.
Terms of Use and Disclaimers | Recommended System Requirements
Need Assistance? Please click on the Contact Us button in the top right corner of any page.

Parts Catalog - Option Detail

Electronic Parts Catalog - Option Detail				
Option	**Group**	**Graphic**	**Film Card**	**Date**
PP2354-04	10.01.1	null	K50	08-AUG-14
Engines	G50, K50, K50-DPM, QSK50 CM2150 K107, QSK50 CM2150 MCRS, QSK50 CM2350 K108, QSK50 CM850 MCRS, QSK50 DF CM850/CM2150 MCRS			

Cart	Ref No	Part Number	Part Description	Required	Remarks
View My Cart					
		PP2354-04	Aftercooler Plumbing		Aftercooler Plumbing...(More)
					Certified Model Name:
					KTA50-G8
					CPL: 2354
					Certified By: None
					Engine Aspiration:
					Turbocharger
					Application: Power Generation
					Power Rating: Intermittent
					KTA-50G8 With LTA K-2000
					Technology.
					Less Water Pumps.
					For Standby, Prime and
					Continuous Applications.
		3013519	Water Connection Mounting Cover	1	
☐		3014766	Captive Washer Cap Screw	2	3/8 - 16 X 1 3/64 in.
☐		3175517	Flange Gasket	1	
☐		3175522	Cover Plate	1	
		3177568	Aftercooler Plumbing	1	
☐		S 105	Hexagon Head Cap Screw	4	3/8 - 16 X 3 1/2 in.
☐		S 109	Hexagon Head Cap Screw	2	3/8 - 16 X 7/8 in.
☐		S 199 B	Hexagon Head Cap Screw	4	3/8 - 16 3 3/4 in.
☐		S 604	Lock Washer	2	3/8 in.
☐		68910	O-Ring Seal	8	
☐		3033915	O-Ring Seal	16	
☐		3036460	Spring Washer	8	
☐		3050953	Water Transfer Tube	4	

☐		3058812	Dust Seal	8	
☐		3175058	Clip	2	
☐		3629821	Tube Brace	2	
☐		3633120	Water Transfer Connection	1	
☐		3633121	Water Transfer Connection	1	
☐		3633122	Water Transfer Connection	1	
☐		3633123	Water Transfer Connection	1	
☐		3633132	Water Transfer Connection	1	
☐		3633133	Water Transfer Connection	1	
☐		3633134	Water Transfer Connection	1	
☐		3633135	Water Transfer Connection	1	
		3630800	Plumbing , Left Bank Aftercooler	1	
☐		S 104	Hexagon Head Cap Screw	2	3/8 - 16 X 2 1/4 in.
☐		68910	O-Ring Seal	4	
☐		3036460	Spring Washer	2	
☐		3058812	Dust Seal	4	
☐		3179850	Water Transfer Tube	1	
☐		3179853	Water Transfer Tube	1	
☐		3644511	Tube Brace	1	
		3630801	Plumbing , Right Bank Aftercooler	1	
☐		S 104	Hexagon Head Cap Screw	2	3/8 - 16 X 2 1/4 in.
☐		68910	O-Ring Seal	4	
☐		3036460	Spring Washer	2	
☐		3058812	Dust Seal	4	
☐		3179856	Water Transfer Tube	1	
☐		3179859	Water Transfer Tube	1	
☐		3644511	Tube Brace	1	
		3633796	Plumbing , Left Bank Aftercooler	1	
☐		3066467	Male Union	3	
☐		3068888	O-Ring Seal	1	
		3100537	Male Union	1	
		3634706	Instruction Tag	2	
☐		3634708	Draincock	2	
☐		3924052	Flexible Hose	1	
		3633824	Plumbing , Right Bank Aftercooler	1	
☐		3066467	Male Union	3	
☐		3068888	O-Ring Seal	1	

		3100537	Male Union	1	
		3634706	Instruction Tag	2	
		3634708	Draincock	2	
		3924052	Flexible Hose	1	

© 2017 Cummins Inc., Box 3005, Columbus, IN 47202-3005 U.S.A.
Terms of Use and Disclaimers | Recommended System Requirements
Need Assistance? Please click on the Contact Us button in the top right corner of any page.

Parts Catalog - Option Detail

Electronic Parts Catalog - Option Detail				
Option	**Group**	**Graphic**	**Film Card**	**Date**
AP6129	01.06.1	ap600gc	K50	15-JAN-07
Engines	G50, K50, K50-DPM, QSK50 CM2150 K107, QSK50 CM2150 MCRS, QSK50 CM2350 K108, QSK50 CM850 MCRS, QSK50 DF CM850/CM2150 MCRS			

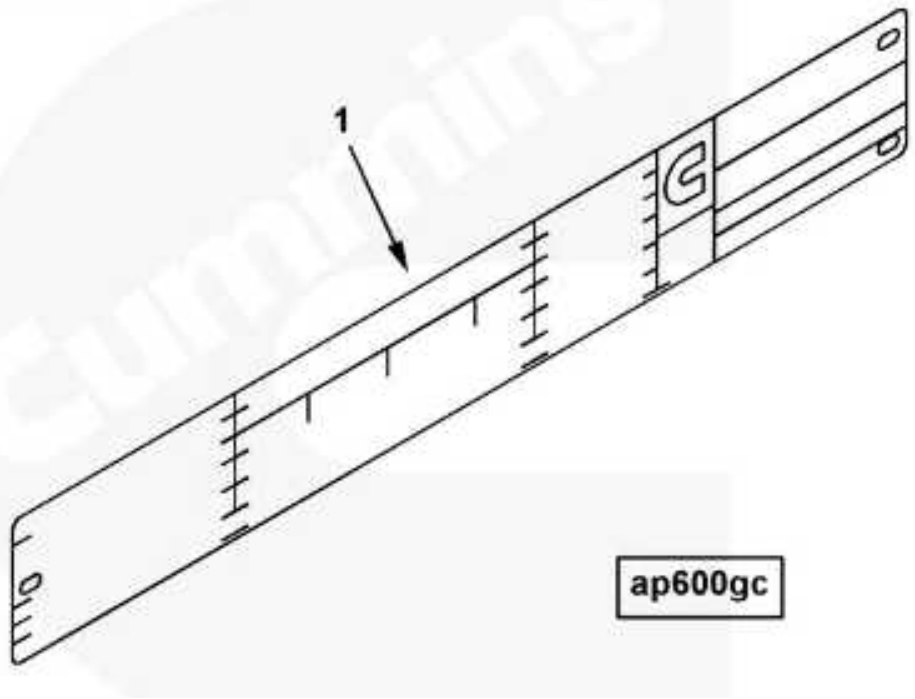

SMALL | MEDIUM | LARGE

Cart	Ref No	Part Number	Part Description	Required	Remarks
View My Cart					
		AP6129	Agency Approval		Agency approval...(More)
					Certified By: None
					Application: Power
					Generation cert level: None
					special allowance: N/A cert
					agent: None comment:
					Fuel Type: Diesel centinel
					provision: No.
☐	1	4970456	Dataplate	1	

© 2017 Cummins Inc., Box 3005, Columbus, IN 47202-3005 U.S.A.
Terms of Use and Disclaimers | Recommended System Requirements
Need Assistance? Please click on the Contact Us button in the top right corner of any page.

Parts Catalog - Option Detail

Electronic Parts Catalog - Option Detail				
Option	**Group**	**Graphic**	**Film Card**	**Date**
IM6726-03	10.01	im602gd	K50	17-MAY-03
Engines	G50, K50, K50-DPM, QSK50 CM2150 K107, QSK50 CM2150 MCRS, QSK50 CM2350 K108, QSK50 CM850 MCRS, QSK50 DF CM850/CM2150 MCRS			

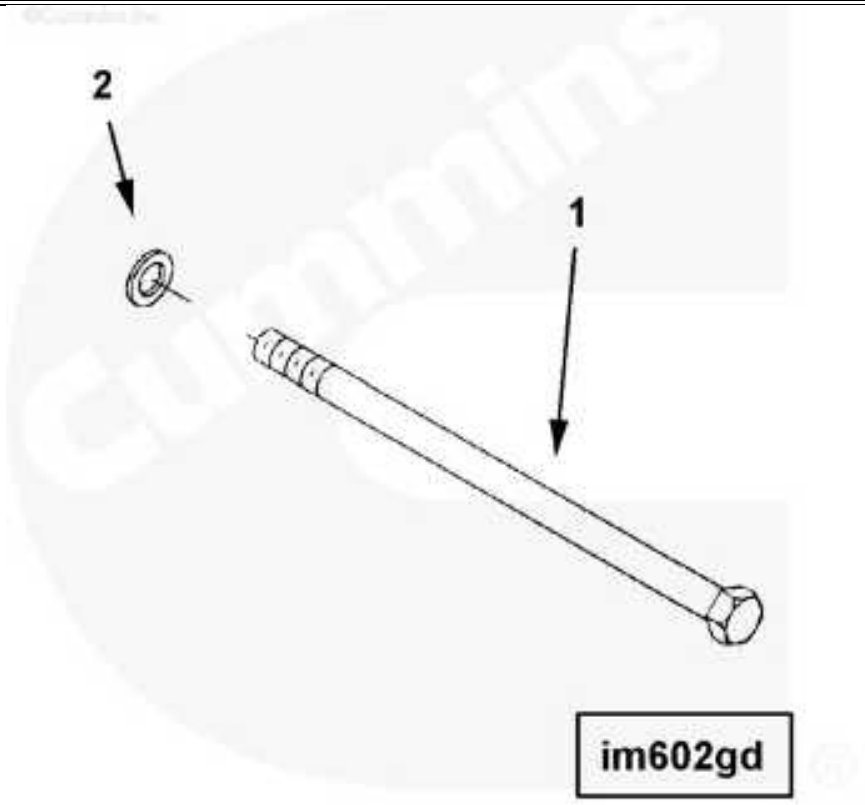

SMALL | MEDIUM | LARGE

Cart	Ref No	Part Number	Part Description	Required	Remarks
View My Cart					
		IM6726-03	Intake Manifold Mounting		Contains intake manifold...(More)
					hardware.
					For use when fuel filter
					block is mounted to fuel
					pump.
					For use with automotive (flat
					top) fuel pumps for LTA
					engines only.
☐	1	S 106 C	Hexagon Head Cap Screw	2	3/8 - 16 X 4 3/4 in.
☐	2	3036460	Spring Washer	2	

© 2017 Cummins Inc., Box 3005, Columbus, IN 47202-3005 U.S.A.

Parts Catalog - Option Detail

Electronic Parts Catalog - Option Detail				
Option	**Group**	**Graphic**	**Film Card**	**Date**
EE6065-04	13.02	ee601gj	K50	01-APR-04
Engines	G50, K50, K50-DPM, QSK50 CM2150 K107, QSK50 CM2150 MCRS, QSK50 CM2350 K108, QSK50 CM850 MCRS, QSK50 DF CM850/CM2150 MCRS			

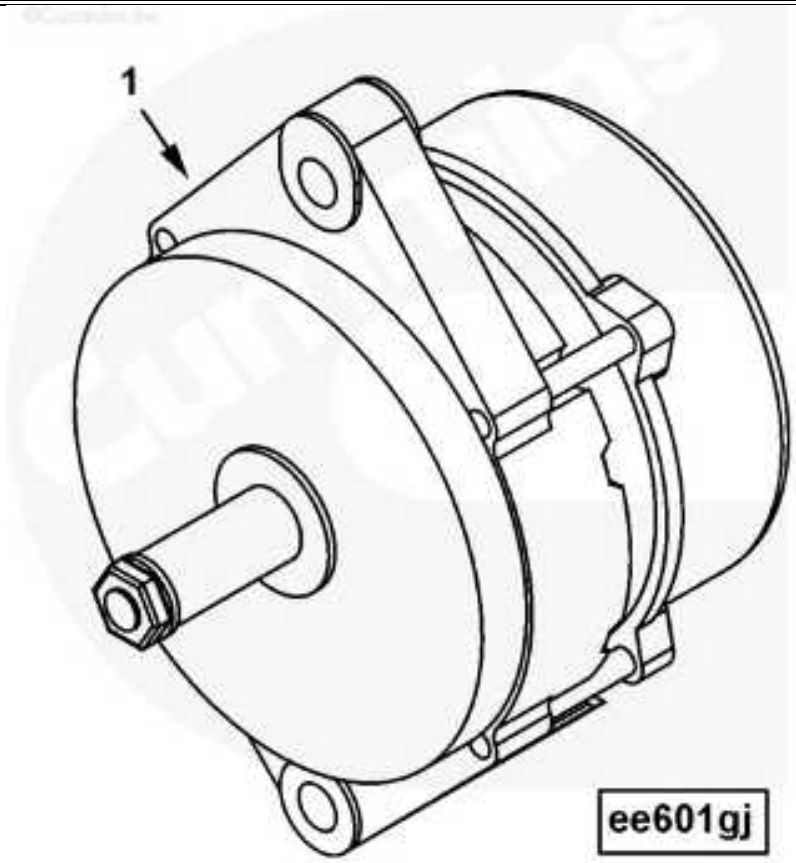

SMALL | MEDIUM | LARGE

Cart	Ref No	Part Number	Part Description	Required	Remarks
View My Cart					
		EE6065-04	Alternator		Prestolite alternator 24volt...(More)
					55 a (Prestolite reference
					lna4024/8).
☐	1	4094998	Alternator	1	

© 2017 Cummins Inc., Box 3005, Columbus, IN 47202-3005 U.S.A.
Terms of Use and Disclaimers | Recommended System Requirements
Need Assistance? Please click on the Contact Us button in the top right corner of any page.

Parts Catalog - Option Detail

Electronic Parts Catalog - Option Detail				
Option	**Group**	**Graphic**	**Film Card**	**Date**
EE6021	13.02.3	eh600gi	K50	12-MAR-91
Engines	G50, K50, K50-DPM, QSK50 CM2150 K107, QSK50 CM2150 MCRS, QSK50 CM2350 K108, QSK50 CM850 MCRS, QSK50 DF CM850/CM2150 MCRS			

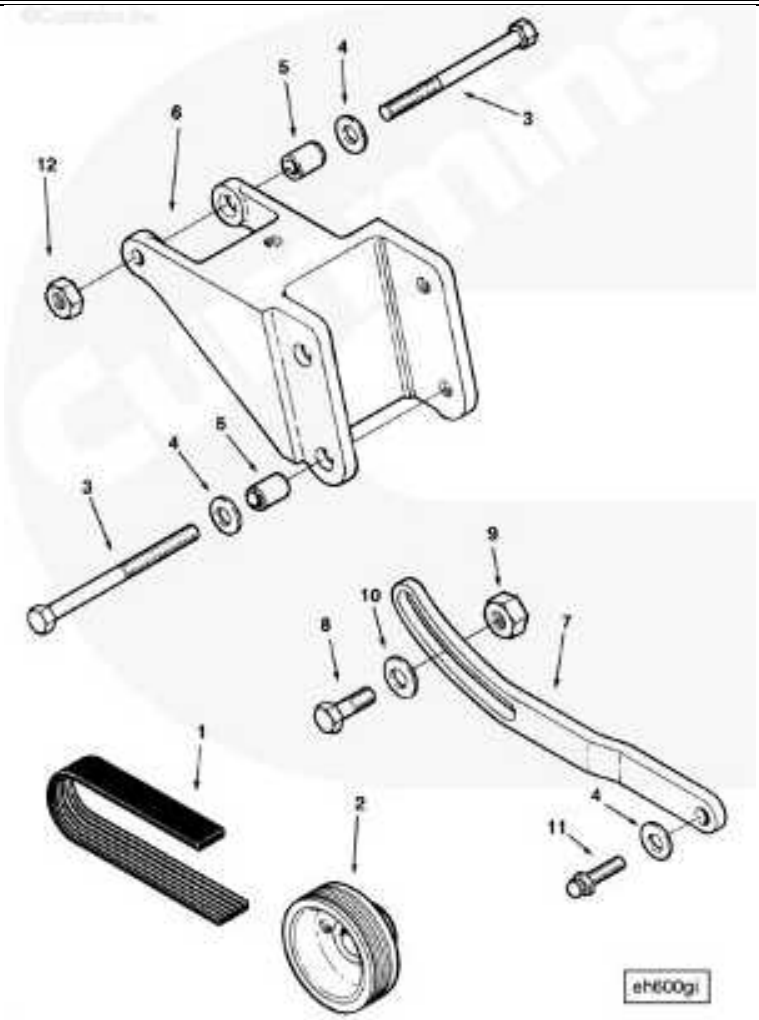

SMALL | MEDIUM | LARGE

Cart	Ref No	Part Number	Part Description	Required	Remarks
View My Cart					
		EE6021	Alternator Mounting		Mounting and drive for Butec...(More)
					alternators. Includes pulley
					and 5rib "K" section v-ribbed
					belt. Drive ratio is 2.62
					times engine speed.
☐	1	3039376	V Ribbed Belt	1	
☐	2	3179922	Alternator Pulley	1	

	3	S 167 B	Hexagon Head Cap Screw	3	7/16 - 14 X 5 1/2 Inch.
	4	203760	Plain Washer	5	7/16 in.
	5	207509	Sleeve	3	
	6	3179866	Alternator Support	1	
	7	3626871	Adjusting Link	1	
	8	106549	Hexagon Head Cap Screw	1	3/8 - 24 x 1 3/4 in.
	9	107534	Lock Nut	1	
	10	108330	Plain Washer	1	3/8 in.
	11	206326	Twelve Point Cap Screw	1	7/16- 14 X 1 1/4 Inch.
	12	555273	Lock Nut	1	

© 2017 Cummins Inc., Box 3005, Columbus, IN 47202-3005 U.S.A.
Terms of Use and Disclaimers | Recommended System Requirements
Need Assistance? Please click on the Contact Us button in the top right corner of any page.

Parts Catalog - Option Detail

Electronic Parts Catalog - Option Detail				
Option	**Group**	**Graphic**	**Film Card**	**Date**
HD6011-01	12.04	gs600gt	K50	19-SEP-96
Engines	G50, K50, K50-DPM, QSK50 CM2150 K107, QSK50 CM2150 MCRS, QSK50 CM2350 K108, QSK50 CM850 MCRS, QSK50 DF CM850/CM2150 MCRS			

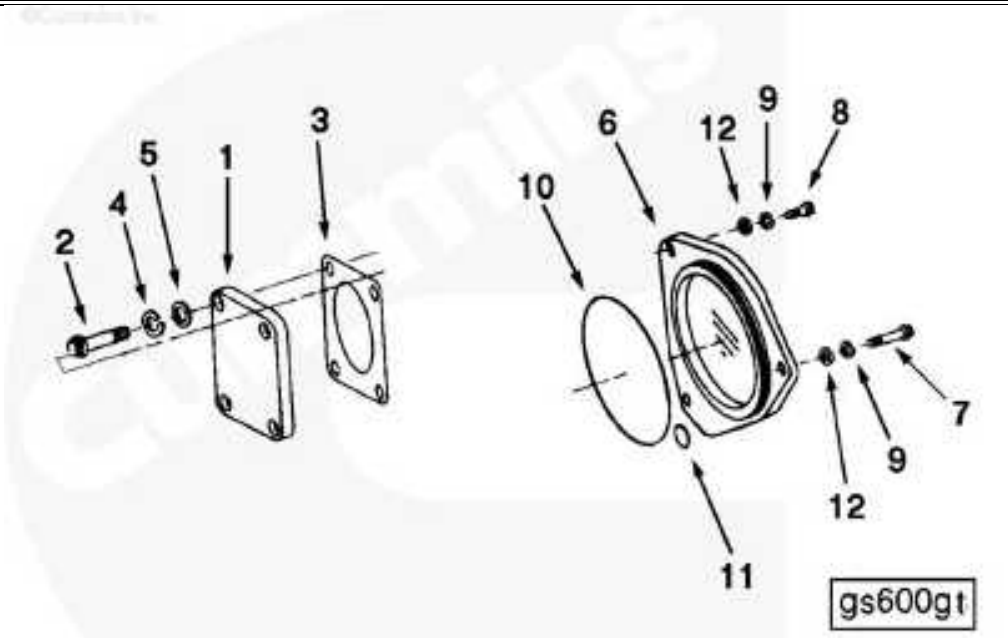

SMALL | MEDIUM | LARGE

Cart	Ref No	Part Number	Part Description	Required	Remarks
View My Cart					
		HD6011-01	Hydraulic Pump		Required when fuel...(More)
					transfer pump drive or
					hydraulic pump drive is not
					specified. May be used when
					future upfit of fuel transfer
					pump is anticipated.
☐	1	206406	Flange	1	
☐	2	S 145	Hexagon Head Cap Screw	4	1/2 - 13 X 1 1/4 in.
☐	3	206407	Hand Hole Gasket	1	
☐	4	111445	Lock Washer	4	
☐	5	127571	Plain Washer	4	1/2 in.
☐	6	206158	Hydraulic Pump Flange Cover	1	
☐	7	S 162 A	Hexagon Head Cap Screw	2	7/16 - 14 X 2 3/4 in.
☐	8	103023	Hexagon Head Cap Screw	1	7/16 - 14 X 1 in.
☐	9	135783	Lock Washer	3	7/16 in.

	10	145600	O-Ring Seal	1	
	11	3818885	O-Ring Seal	1	
	12	3175027	Plain Washer	3	

© 2017 Cummins Inc., Box 3005, Columbus, IN 47202-3005 U.S.A.
Terms of Use and Disclaimers | Recommended System Requirements
Need Assistance? Please click on the Contact Us button in the top right corner of any page.

Parts Catalog - Option Detail

Electronic Parts Catalog - Option Detail				
Option	**Group**	**Graphic**	**Film Card**	**Date**
BP6126-12	01.01	null	K50	01-OCT-13
Engines	G50, K50, K50-DPM, QSK50 CM2150 K107, QSK50 CM2150 MCRS, QSK50 CM2350 K108, QSK50 CM850 MCRS, QSK50 DF CM850/CM2150 MCRS			

Cart	Ref No	Part Number	Part Description	Required	Remarks
View My Cart					
		BP6126-12	Cylinder Block		Cylinder Block...(More)
					Fuel Control System: Dual STC
					(Stepped Timing Control)
					Water Pump Included: Yes
☐		3010595	Captive Washer Cap Screw	12	3/8 - 16 X 1 in.
☐		3178947	Hexagon Head Cap Screw	16	5/16 - 18 X 1 1/4 in.
☐		3628604	Pipe Plug	4	
☐		3628605	Pipe Plug	6	
☐		3628609	Pipe Plug	1	
☐		3629168	Expansion Plug	8	
☐		3631471	O-Ring Adapter	6	
		3631472	Seal Retainer	1	
		3631473	Cover Plate	1	
☐		3632840	O-Ring Seal	6	
☐		3638583	Draincock	3	
☐		3645841	Expansion Plug	16	
☐		3879479	Piston Cooling Valve	8	
☐		S 965 E	Pipe Plug	2	1/16 NPT.
☐		3058424	Compression Spring	1	
☐		3179000	Pin Dowel	2	
		3873801	Retaining Ring	1	
		3873802	Oil Control Valve Plunger	1	
☐		3873869	Piston Cooling Valve Body	1	
☐		4017621	Expansion Plug	19	
		4927512	Cylinder Block	1	
☐		139990	Plain Washer	18	3/4 in.
☐		205230	Bushing	2	

		205584	Twelve Point Cap Screw	18	3/4 - 10 X 2 1/4 in.
		206587	Main Bearing Cap	7	
		206588	Main Bearing Cap	2	
		3025485	Plain Washer	18	
		4927511	Cylinder Block	1	
		3175805	Bushing	32	
		3640775	Tamper Proof Seal	9	
		3176857	Ring Dowel	9	
		3628452	Fracture Resistant Screw	18	
		3006089	Cylinder Liner	16	
		3011076	D-Ring Seal	1	
		3011884	Liner Insert	1	Thickness: 0.1995 in.
		3014668	D-Ring Seal	1	
		3022157	Cylinder Liner	1	
		3081489	Oil Seal	1	
		4955242	Cylinder Block Kit	A/R	
		3648602	Cylinder Block	1	
		S 610	Lock Washer	15	7/16 in.
		138912	Pin Dowel	1	
		195952	O-Ring Seal	6	
		3002993	Ring Dowel	32	
		3010595	Captive Washer Cap Screw	12	3/8 - 16 X 1 in.
		3014766	Captive Washer Cap Screw	4	3/8 - 16 X 1 3/64 in.
		3175522	Cover Plate	2	
		3176618	Diamond Dowel	1	
		3178947	Hexagon Head Cap Screw	16	5/16 - 18 X 1 1/4 in.
		3628605	Pipe Plug	10	
		3628607	Pipe Plug	2	
		3628609	Pipe Plug	1	
		3629168	Expansion Plug	8	
		3631471	O-Ring Adapter	6	
		3638583	Draincock	3	
		3645841	Expansion Plug	16	
		4016364	Pin Dowel	32	
		4017621	Expansion Plug	19	

		2885786	Liner Kit	A/R	
		3011076	D-Ring Seal	1	
		3011884	Liner Insert	1	Thickness: 0.1995 in.
		3014668	D-Ring Seal	1	
		3022157	Cylinder Liner	1	
		3081489	Oil Seal	1	
		3088385	Liner Seal Ring	A/R	0.46 mm.
		3088386	Liner Seal Ring	A/R	0.52 mm.
		3088387	Liner Seal Ring	A/R	0.56 mm.
		3088388	Liner Seal Ring	A/R	0.79 mm.
		3011884	Liner Insert	A/R	Thickness: 0.1995 in.
		3019150	Liner Insert	A/R	Thickness: 0.2015 in.
		3021148	Liner Insert	A/R	Thickness: 0.2035 in.
		3643060	Liner Insert	A/R	

© 2017 Cummins Inc., Box 3005, Columbus, IN 47202-3005 U.S.A.
Terms of Use and Disclaimers | Recommended System Requirements
Need Assistance? Please click on the Contact Us button in the top right corner of any page.

Parts Catalog - Option Detail

Electronic Parts Catalog - Option Detail				
Option	**Group**	**Graphic**	**Film Card**	**Date**
OB6722	03.02	ob606gg	K50	28-APR-97
Engines	G50, K50, K50-DPM, QSK50 CM2150 K107, QSK50 CM2150 MCRS, QSK50 CM2350 K108, QSK50 CM850 MCRS, QSK50 DF CM850/CM2150 MCRS			

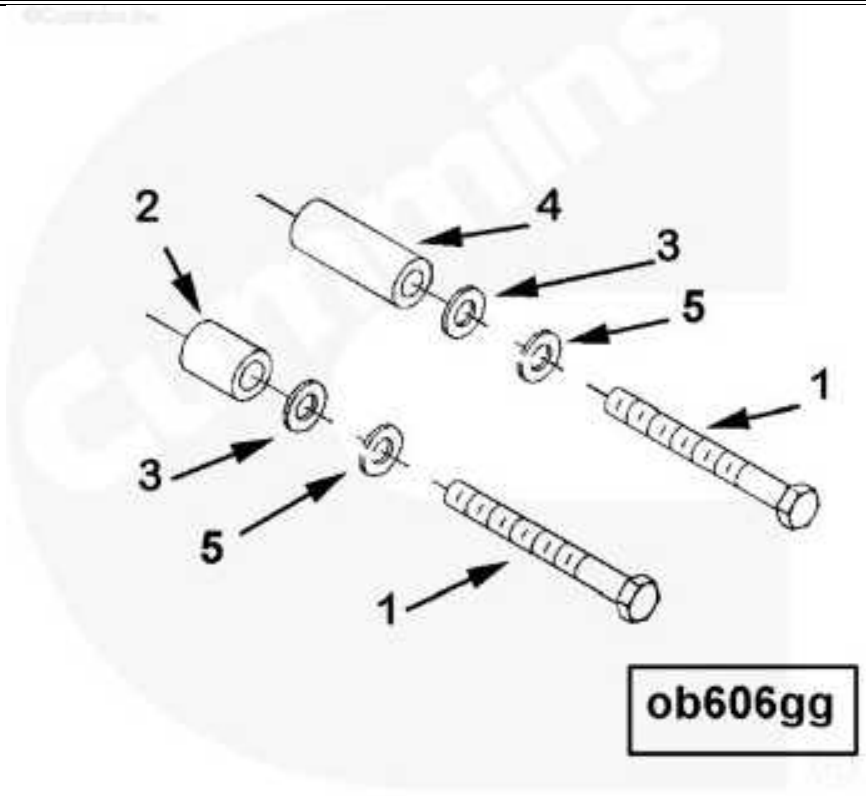

SMALL | MEDIUM | LARGE

Cart	Ref No	Part Number	Part Description	Required	Remarks
View My Cart					
		OB6722	Breather Mounting		Breather box mounting...(More)
					parts, for use when Cense
					engine monitoring system
					is not required.
☐	1	S 105	Hexagon Head Cap Screw	4	3/8 - 16 X 3 1/2 in.
☐	2	64709	Mounting Spacer	2	
☐	3	3628902	Plain Washer	4	
☐	4	3629762	Mounting Spacer	2	
☐	5	S 604	Lock Washer	4	3/8 in.

© 2017 Cummins Inc., Box 3005, Columbus, IN 47202-3005 U.S.A.
Terms of Use and Disclaimers | Recommended System Requirements
Need Assistance? Please click on the Contact Us button in the top right corner of any page.

Parts Catalog - Option Detail

Electronic Parts Catalog - Option Detail				
Option	**Group**	**Graphic**	**Film Card**	**Date**
BP6126-04	04.03	null	K50	17-JUN-11
Engines	G50, K50, K50-DPM, QSK50 CM2150 K107, QSK50 CM2150 MCRS, QSK50 CM2350 K108, QSK50 CM850 MCRS, QSK50 DF CM850/CM2150 MCRS			

Cart	Ref No	Part Number	Part Description	Required	Remarks
View My Cart					
		BP6126-04	Cam Follower Housing		Cam Follower Housing...(More)
					Fuel Control System: Dual STC
					(Stepped Timing Control)
					Water Pump Included: Yes
		3019580	Cam Follower Mounting Cover	1	
☐		S 126	Hexagon Head Cap Screw	28	3/8 - 16 X 2 1/2 in.
☐		S 604	Lock Washer	28	3/8 in.
☐		3010596	Captive Washer Cap Screw	32	3/8 - 16 X 1 1/4 in.
☐		3040721	Cam Follower Housing Gasket	16	
☐		3628902	Plain Washer	60	
☐		3017961	Push Rod	16	
☐		3057139	Push Rod	32	
		3628092	Cam Mounting Follower	16	
☐		127362	Plain Washer	2	3/8 in.
☐		3002993	Ring Dowel	2	
☐		3627945	Twelve Point Cap Screw	2	
☐		3642502	Cam Follower Lever	16	
☐		205439	Retaining Ring	2	
☐		3642503	Cam Follower Lever	1	
		3642504	Cam Follower Lever	1	
☐		4009479	Cam Follower Roller Pin	1	
☐		3642505	Cam Follower Roller	1	
☐		213559	Cam Follower Socket	1	
☐		3039164	Cam Follower Lever	2	
☐		213559	Cam Follower Socket	1	
		205069	Cam Follower Lever	1	
☐		4009248	Cam Follower Roller Pin	1	

☐		3016826	Cam Follower Roller	1	
☐		205438	Tappet Roller Pin Lockwire	1	
☐		3078218	Cam Follower Shaft	1	
☐		205227	Expansion Plug	2	
		3077538	Cam Follower Shaft	1	

© 2017 Cummins Inc., Box 3005, Columbus, IN 47202-3005 U.S.A.
Terms of Use and Disclaimers | Recommended System Requirements
Need Assistance? Please click on the Contact Us button in the top right corner of any page.

Parts Catalog - Option Detail

Electronic Parts Catalog - Option Detail				
Option	**Group**	**Graphic**	**Film Card**	**Date**
PP2354-02	01.07	pp613gj	K50	08-AUG-14
Engines	G50, K50, K50-DPM, QSK50 CM2150 K107, QSK50 CM2150 MCRS, QSK50 CM2350 K108, QSK50 CM850 MCRS, QSK50 DF CM850/CM2150 MCRS			

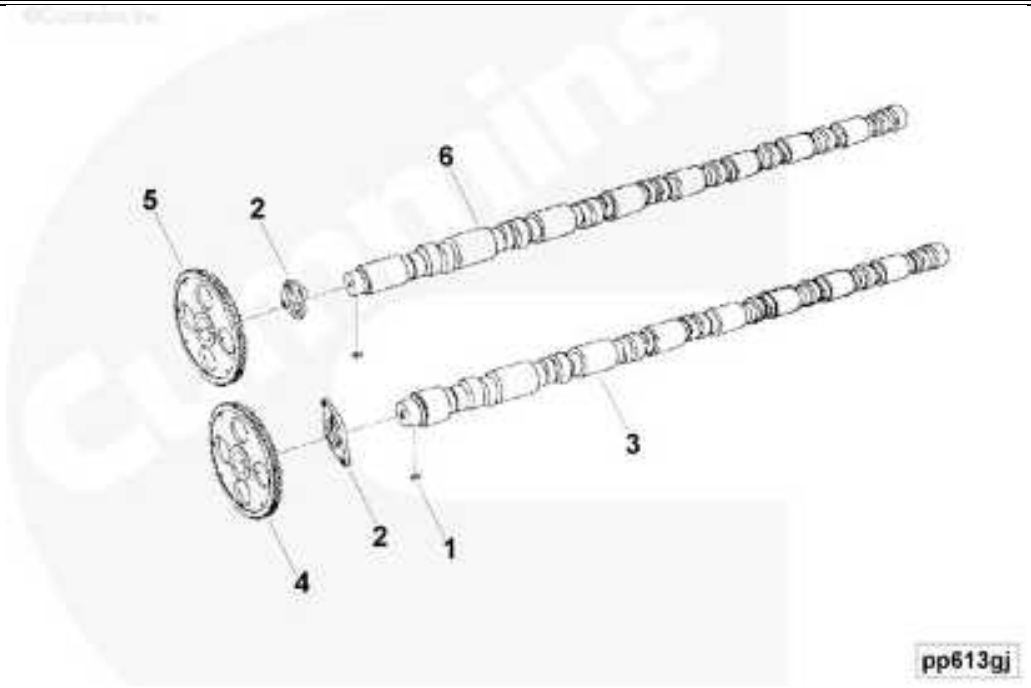

SMALL | MEDIUM | LARGE

Cart	Ref No	Part Number	Part Description	Required	Remarks
View My Cart					
		PP2354-02	Camshaft And Gear		Camshaft and Gear...(More)
					Certified Model Name:
					KTA50-G8
					CPL: 2354
					Certified By: None
					Engine Aspiration:
					Turbocharger
					Application: Power Generation
					Timing gear Code: KA
					Power Rating: Intermittent
					KTA-50G8 With LTA K-2000
					Technology.
					Less Water Pumps.
					For Standby, Prime and

					Continuous Applications.
		3098988	Camshaft Left Bank	1	
	1	S 302	Plain Woodruff Key	1	
	2	3007971	Camshaft Thrust Bearing	1	
	3	3098739	Camshaft	1	
	4	207248	Camshaft Gear	1	
		3098989	Camshaft Right Bank	1	
	1	S 302	Plain Woodruff Key	1	
	2	3007971	Camshaft Thrust Bearing	1	
	5	206747	Camshaft Gear	1	
	6	3098738	Camshaft	1	

© 2017 Cummins Inc., Box 3005, Columbus, IN 47202-3005 U.S.A.
Terms of Use and Disclaimers | Recommended System Requirements
Need Assistance? Please click on the Contact Us button in the top right corner of any page.

Parts Catalog - Option Detail

Electronic Parts Catalog - Option Detail				
Option	**Group**	**Graphic**	**Film Card**	**Date**
BP6126-01	01.07.2	null	K50	02-NOV-04
Engines	G50, K50, K50-DPM, QSK50 CM2150 K107, QSK50 CM2150 MCRS, QSK50 CM2350 K108, QSK50 CM850 MCRS, QSK50 DF CM850/CM2150 MCRS			

Cart	Ref No	Part Number	Part Description	Required	Remarks
View My Cart					
		BP6126-01	Camshaft Mounting		Camshaft Mounting...(More)
					Fuel Control System: Dual STC
					(Stepped Timing Control)
					Water Pump Included: Yes
☐		207373	Camshaft Cover	2	
		3068865	Camshaft Mounting Cover	2	
☐		3010595	Captive Washer Cap Screw	3	3/8 - 16 X 1 in.
☐		3040722	Camshaft Cover Gasket	1	
☐		3628902	Plain Washer	3	
☐		3628755	Camshaft Cover	14	
		3632011	Camshaft Cover	1	
☐		3628756	Camshaft Cover	2	
		3634289	Mounting Camshaft	1	
☐		S 112	Hexagon Head Cap Screw	4	3/8 - 16 X 1 in.
☐		68908	Lock Plate	4	

© 2017 Cummins Inc., Box 3005, Columbus, IN 47202-3005 U.S.A.
Terms of Use and Disclaimers | Recommended System Requirements
Need Assistance? Please click on the Contact Us button in the top right corner of any page.

Parts Catalog - Option Detail

Electronic Parts Catalog - Option Detail				
Option	**Group**	**Graphic**	**Film Card**	**Date**
WF6023-12	08.08	wf602gm	K50	04-MAY-11
Engines	G50, K50, K50-DPM, QSK50 CM2150 K107, QSK50 CM2150 MCRS, QSK50 CM2350 K108, QSK50 CM850 MCRS, QSK50 DF CM850/CM2150 MCRS			

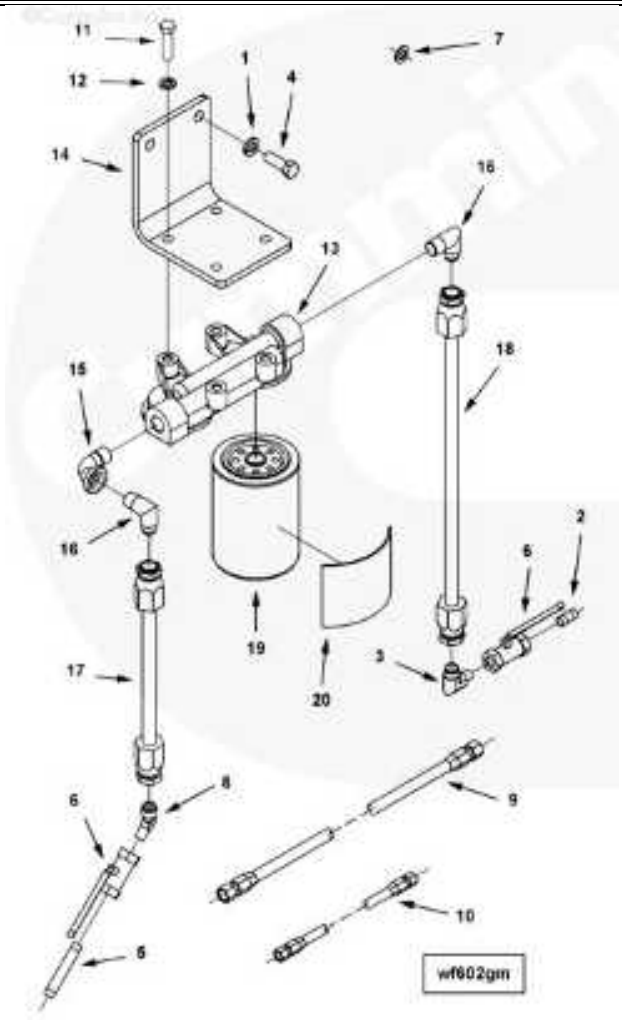

SMALL | MEDIUM | LARGE

Cart	Ref No	Part Number	Part Description	Required	Remarks
View My Cart					
		WF6023-12	Resistor Corrosion		Single corrosion resistor...(More)
					head with two replaceable
					spin-on cartridges mounted
					On the pan rail right side of
					engine.
					Includes two 23 unit DCA
					filter cartridges 5.4inches

					(137.5mm) in length.
					This option does not contain
					any
					Additional DCA corrosion
					inhibitor.
					Special option for Onan.
	1	S 610	Lock Washer	2	7/16 in.
	2	550291	Plain Pipe Nipple	1	
	3	S 1040 A	Male Adapter Elbow	1	
	4	103009	Hexagon Head Cap Screw	2	7/16 - 14 X 1 1/4 in.
	5	109660	Plain Pipe Nipple	1	
	6	3178837	Shut-Off Valve	2	
	7	3628902	Plain Washer	1	
	8	3629494	Male Adapter Elbow	1	
		3630338	Corrosion Resistor Head	1	
	9	AK6009 SS	Flexible Hose	1	
	10	AS6018 SS	Flexible Hose	1	
	11	S 103 D	Hexagon Head Cap Screw	4	3/8 - 16 x 1 1/4 in.
	12	S 604	Lock Washer	4	3/8 in.
	13	215617	Corrosion Resistor Head	1	
	14	3177591	Corrosion Resistor Bracket	1	
	15	3178838	Plain Street Pipe Elbow	1	
	16	3629496	Male Adapter Elbow	2	
	17	3634299	Flexible Hose	1	
	18	3634302	Flexible Hose	1	
	19	4058965	Corrosion Resistor	2	Buy from Cummins Filtration
	20	3642788	Information Decal	2	

© 2017 Cummins Inc., Box 3005, Columbus, IN 47202-3005 U.S.A.
Terms of Use and Disclaimers | Recommended System Requirements
Need Assistance? Please click on the Contact Us button in the top right corner of any page.

Parts Catalog - Option Detail

Electronic Parts Catalog - Option Detail				
Option	**Group**	**Graphic**	**Film Card**	**Date**
BP6728-05	01.02	null	K50	02-JUN-16
Engines	G50, K50, K50-DPM, QSK50 CM2150 K107, QSK50 CM2150 MCRS, QSK50 CM2350 K108, QSK50 CM850 MCRS, QSK50 DF CM850/CM2150 MCRS			

Cart	Ref No	Part Number	Part Description	Required	Remarks
View My Cart					
		BP6728-05	Engine Crankshaft		Engine Crankshaft...(More)
					Component Supplied:
					Crankshaft Assembly
					Non-Certified
					Rear Hydraulic Drive
					Provision: No
					Crankshaft Includes:
					Rolled Thread And Round
					Drill Point Cranknose.
					Reduced Pitch Circle For
					Vibration Damper Attachment.
					Application Restrictions: Use
					On Applications Of 1600 BHP
					And Above
☐		3628605	Pipe Plug	2	
		3648617	Engine Crankshaft	1	
☐		206904	Plain Woodruff Key	1	
☐		3175255	Crankshaft Gear	1	
☐		3628798	Crankshaft Gear	1	
☐		3648618	Engine Crankshaft	1	
☐		205126	Plain Washer	16	5/8 in.
☐		219153	Fracture Resistant Screw	16	
☐		3176216	Crankshaft Counter Weight	8	
☐		3642450	Ring Dowel	16	
		3648619	Engine Crankshaft	1	

© 2017 Cummins Inc., Box 3005, Columbus, IN 47202-3005 U.S.A.
Terms of Use and Disclaimers | Recommended System Requirements
Need Assistance? Please click on the Contact Us button in the top right corner of any page.

Parts Catalog - Option Detail

Electronic Parts Catalog - Option Detail				
Option	**Group**	**Graphic**	**Film Card**	**Date**
PP2354-03	02.01	null	K50	30-MAY-01
Engines	G50, K50, K50-DPM, QSK50 CM2150 K107, QSK50 CM2150 MCRS, QSK50 CM2350 K108, QSK50 CM850 MCRS, QSK50 DF CM850/CM2150 MCRS			

Cart	Ref No	Part Number	Part Description	Required	Remarks
View My Cart					
		PP2354-03	Cylinder Head		

© 2017 Cummins Inc., Box 3005, Columbus, IN 47202-3005 U.S.A.
Terms of Use and Disclaimers | Recommended System Requirements
Need Assistance? Please click on the Contact Us button in the top right corner of any page.

Parts Catalog - Option Detail

Electronic Parts Catalog - Option Detail				
Option	**Group**	**Graphic**	**Film Card**	**Date**
PP2354-05	02.01.1	kn600gq	K50	11-MAY-15
Engines	G50, K50, K50-DPM, QSK50 CM2150 K107, QSK50 CM2150 MCRS, QSK50 CM2350 K108, QSK50 CM850 MCRS, QSK50 DF CM850/CM2150 MCRS			

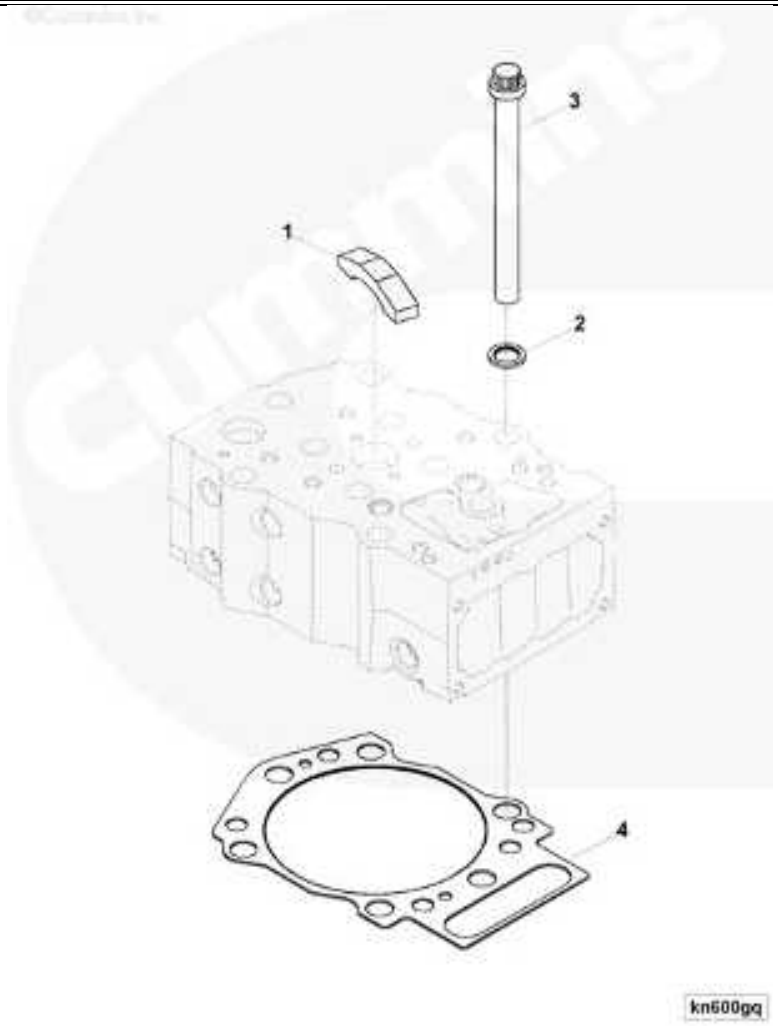

SMALL | MEDIUM | LARGE

Cart	Ref No	Part Number	Part Description	Required	Remarks
View My Cart					
		PP2354-05	Cylinder Head Mounting		Cylinder Head Mounting...(More)
					Certified Model Name:
					KTA50-G8
					CPL: 2354
					Certified By: None
					Engine Aspiration:
					Turbocharger

					Application: Power Generation
					Power Rating: Intermittent
					KTA-50G8 With LTA K-2000
					Technology.
					Less Water Pumps.
					Includes:
					Pulse Type Exhaust Manifolds.
					Premium Performance Parts
					Consisting of:
					Valve Rotators.
					Trilaboy Valves and Valve
					Seats.
					For Standby, Prime and
					Continuous Applications.
					Variant Content:
					In Place of Cylinder Head
					Gasket 4334080, KCL may use
					4959089.
	1	3086362	Valve Crosshead	32	
	2	3629962	Plain Washer	96	
	3	3032633	Fracture Resistant Screw	96	3/4 - 16 X 8 in.
	4	4334080	Cylinder Head Gasket	16	
	4	4334081	Cylinder Head Gasket	A/R	0.02 Inch Oversize.

© 2017 Cummins Inc., Box 3005, Columbus, IN 47202-3005 U.S.A.
Terms of Use and Disclaimers | Recommended System Requirements
Need Assistance? Please click on the Contact Us button in the top right corner of any page.

Parts Catalog - Option Detail

Electronic Parts Catalog - Option Detail				
Option	**Group**	**Graphic**	**Film Card**	**Date**
PP6908-02	01.04	pp607gn	K50	27-JUN-12
Engines	G50, K50, K50-DPM, QSK50 CM2150 K107, QSK50 CM2150 MCRS, QSK50 CM2350 K108, QSK50 CM850 MCRS, QSK50 DF CM850/CM2150 MCRS			

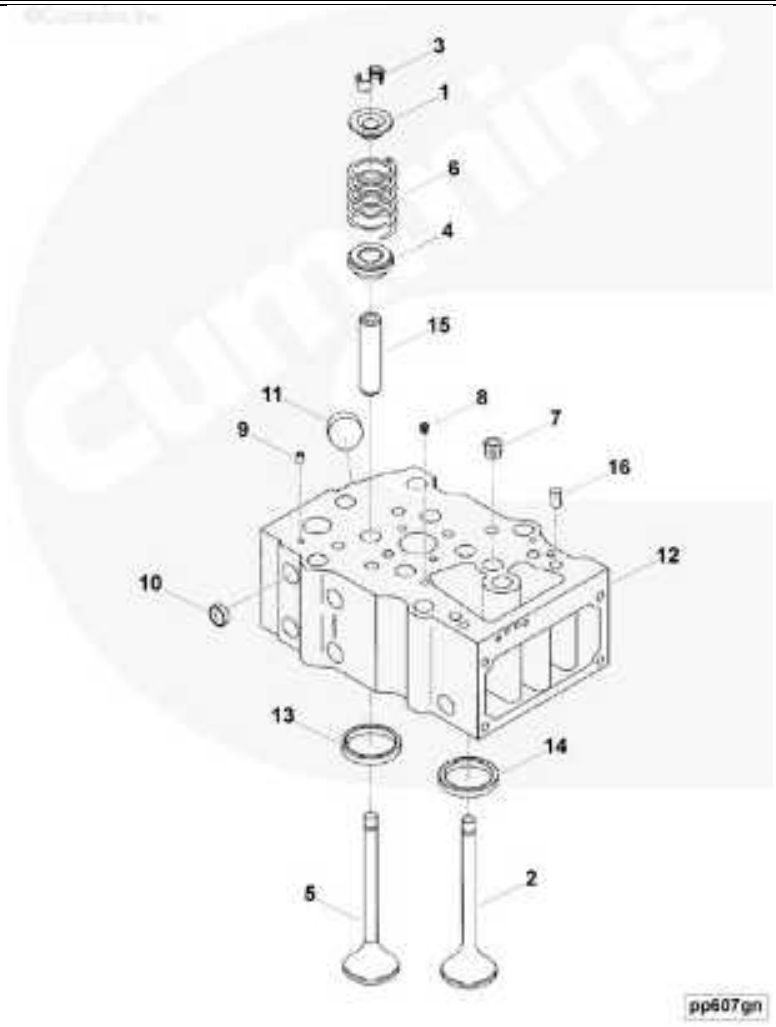

SMALL | MEDIUM | LARGE

Cart	Ref No	Part Number	Part Description	Required	Remarks
View My Cart					
		PP6908-02	Cylinder Head		Cylinder head
					Used for premium power
					applications.
					Engine dataplate to be
					stamped with DC8003in remarks
					area.
					Unique Characteristics: With

					nitrided intake valves.
		3646321	Cylinder Head	16	
	1	205094	Valve Spring Retainer	4	
		2881836	Intake Valve Kit	2	
	2	4986317	Intake Valve	1	
	3	205091	Valve Collet	2	
	4	3640315	Valve Rotator	4	
		3803528	Exhaust Valve	2	
	3	205091	Valve Collet	2	
	5	3088389	Exhaust Valve	1	
	6	3633840	Valve Spring	4	
		3811981	Cylinder Head	1	
		3081065	Cylinder Head	1	
	7	S 915 A	Pipe Plug	1	1/2 NPT.
	8	67622	Pipe Plug	1	3/8 NPT.
	9	203933	Expansion Plug	1	
	10	205401	Expansion Plug	8	
	11	206224	Expansion Plug	2	
	12	3081064	Cylinder Head	1	
	13	3086192	Valve Insert	2	
	14	3086193	Valve Insert	2	
	15	3202210	Valve Stem Guide	4	
	16	3635250	Groove Pin	2	

© 2017 Cummins Inc., Box 3005, Columbus, IN 47202-3005 U.S.A.
Terms of Use and Disclaimers | Recommended System Requirements
Need Assistance? Please click on the Contact Us button in the top right corner of any page.

Parts Catalog - Option Detail

Electronic Parts Catalog - Option Detail				
Option	**Group**	**Graphic**	**Film Card**	**Date**
PP6908	02.01	kn400gr	K50	05-JUN-14
Engines	G50, K50, K50-DPM, QSK50 CM2150 K107, QSK50 CM2150 MCRS, QSK50 CM2350 K108, QSK50 CM850 MCRS, QSK50 DF CM850/CM2150 MCRS			

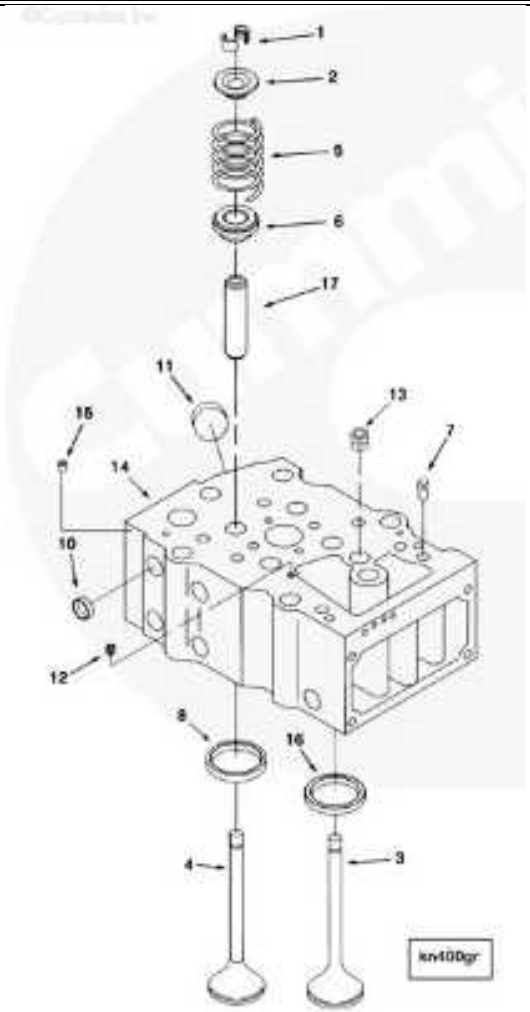

SMALL | MEDIUM | LARGE

Cart	Ref No	Part Number	Part Description	Required	Remarks
View My Cart					
		PP6908	Cylinder Head		
☐		3646323	Cylinder Head	16	
☐	1	205091	Valve Collet	8	
☐	2	205094	Valve Spring Retainer	4	
	3	4986317	Intake Valve	2	
	4	3088389	Exhaust Valve	2	
☐	5	3643725	Valve Spring	4	

	6	3640315	Valve Rotator	4	
	7	3635250	Groove Pin	2	
	8	3086192	Valve Insert	2	
	10	205401	Expansion Plug	8	
	11	206224	Expansion Plug	2	
	12	67622	Pipe Plug	1	3/8 NPT.
	13	S 915 A	Pipe Plug	1	1/2 NPT.
	14	3081064	Cylinder Head	1	
	15	203933	Expansion Plug	1	
	16	3086193	Valve Insert	2	
	17	3202210	Valve Stem Guide	4	
		2881836	Intake Valve Kit	1	
	1	205091	Valve Collet	2	
	3	4986317	Intake Valve	1	
		3803528	Exhaust Valve	1	
	1	205091	Valve Collet	2	
	4	3088389	Exhaust Valve	2	

© 2017 Cummins Inc., Box 3005, Columbus, IN 47202-3005 U.S.A.
Terms of Use and Disclaimers | Recommended System Requirements
Need Assistance? Please click on the Contact Us button in the top right corner of any page.

Parts Catalog - Option Detail

Electronic Parts Catalog - Option Detail				
Option	**Group**	**Graphic**	**Film Card**	**Date**
AP6705-01	01.06.1	null	K50	01-AUG-15
Engines	G50, K50, K50-DPM, QSK50 CM2150 K107, QSK50 CM2150 MCRS, QSK50 CM2350 K108, QSK50 CM850 MCRS, QSK50 DF CM850/CM2150 MCRS			

Cart	Ref No	Part Number	Part Description	Required	Remarks
View My Cart					
		AP6705-01	Declaration Of Incorporation Documentation		DCN of IPN Documentation...(More)
					Certification Agency:
					European Commission
					Directive: 2006/42/EC
					Additional Information:
					A Letter of Conformity is
					Supplied With the Engine
					Stating This Product Meets
					the Declaration of
					Incorporation in Accordance
					With E.C, Machinery Directive
					2006/42/EC.
					This Engine Meets the
					Requirements of the
					Directives fr Machines Which
					are to be Incorporated Into
					a Final Product.
☐		3062329	Wire Tie Clamp	1	

© 2017 Cummins Inc., Box 3005, Columbus, IN 47202-3005 U.S.A.
Terms of Use and Disclaimers | Recommended System Requirements
Need Assistance? Please click on the Contact Us button in the top right corner of any page.

Parts Catalog - Option Detail

Electronic Parts Catalog - Option Detail				
Option	**Group**	**Graphic**	**Film Card**	**Date**
LG6003-02	07.02	ob407gg	K50	04-FEB-15
Engines	G50, K50, K50-DPM, QSK50 CM2150 K107, QSK50 CM2150 MCRS, QSK50 CM2350 K108, QSK50 CM850 MCRS, QSK50 DF CM850/CM2150 MCRS			

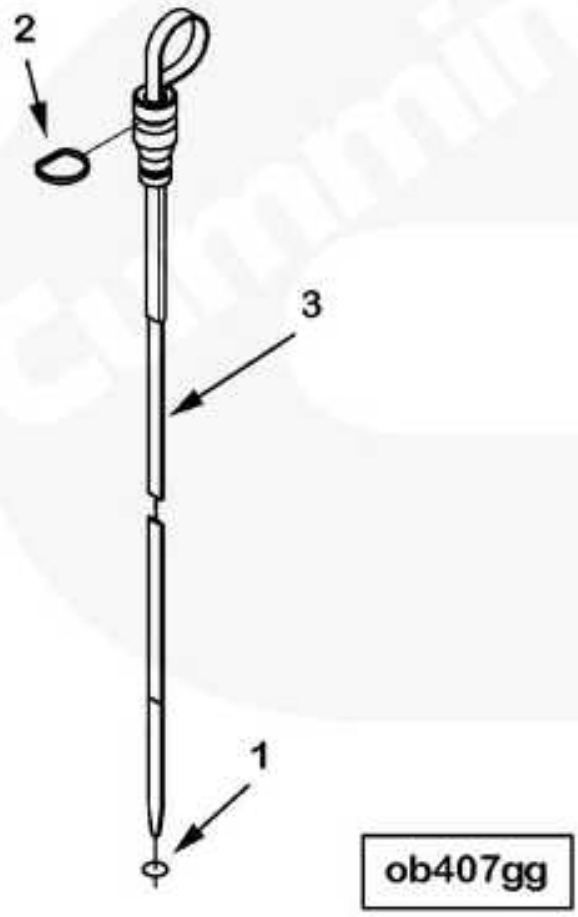

SMALL | MEDIUM | LARGE

Cart	Ref No	Part Number	Part Description	Required	Remarks
View My Cart					
		LG6003-02	Dipstick		Dipstick...(More)
					Items Supplied: Tube And
					Dipstick Combination
					Tube Length (mm): 316.7
					(12.5 in)
					Dipstick Quantity: 1
					Dipstick Calibrated:

					Power Angle (Deg): 0
					Tilt (Deg): 0
					Dipstick Location: Exhaust
					Side #5 Cylinder
					Oil Pan Sump: Center, Deep
					Center, Rear Center
					Run Level Check Capability:
					No
					Sight Gauge Included: No
☐	1	131026	O-Ring Seal	1	
☐	2	3030207	Dipstick Retainer	1	
☐	3	3649992	Dipstick	1	

© 2017 Cummins Inc., Box 3005, Columbus, IN 47202-3005 U.S.A.
Terms of Use and Disclaimers | Recommended System Requirements
Need Assistance? Please click on the Contact Us button in the top right corner of any page.

Parts Catalog - Option Detail

Electronic Parts Catalog - Option Detail				
Option	**Group**	**Graphic**	**Film Card**	**Date**
ES6004-01	13.10	st601ga	K50	31-MAR-97
Engines	G50, K50, K50-DPM, QSK50 CM2150 K107, QSK50 CM2150 MCRS, QSK50 CM2350 K108, QSK50 CM850 MCRS, QSK50 DF CM850/CM2150 MCRS			

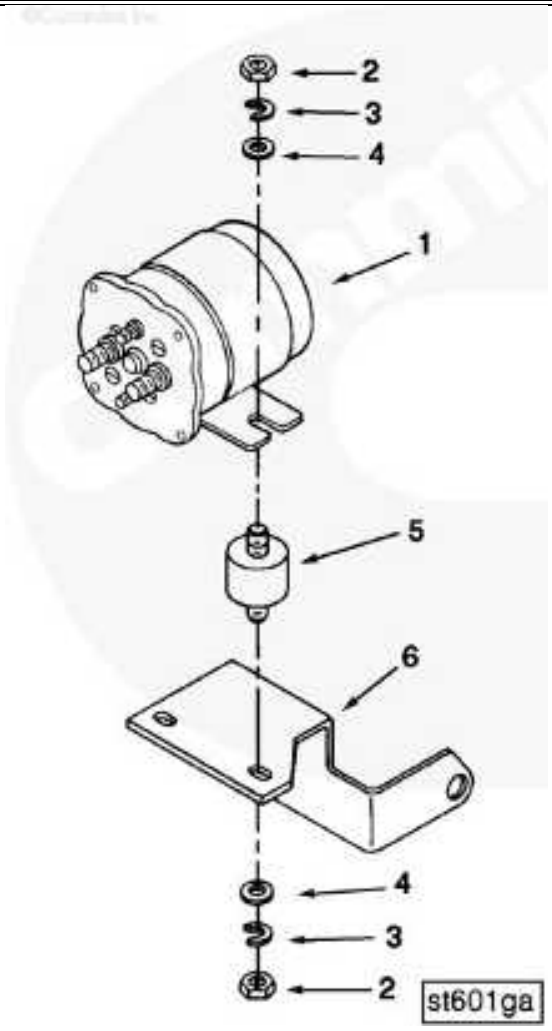

SMALL | MEDIUM | LARGE

Cart	Ref No	Part Number	Part Description	Required	Remarks
View My Cart					
		ES6004-01	Magnetic Switch		24volt insulated magnetic...(More)
					switch for use with dual
					positive engagement electric
					starters. Secured to the
					starter mounting flange.
					When engine wiring and
					electric starters are

					specified, this option must
					be selected.
	1	3050692	Magnetic Switch	1	
	2	S 224	Heavy Hexagon Nut	4	1/4 - 20 UNC.
	3	S 600	Lock Washer	4	1/4 in.
	4	S 631	Plain Washer	4	1/4 in.
	5	3408250	Vibration Isolator	2	
	6	3627324	Magnetic Switch Bracket	1	

© 2017 Cummins Inc., Box 3005, Columbus, IN 47202-3005 U.S.A.
Terms of Use and Disclaimers | Recommended System Requirements
Need Assistance? Please click on the Contact Us button in the top right corner of any page.

Parts Catalog - Option Detail

Electronic Parts Catalog - Option Detail				
Option	**Group**	**Graphic**	**Film Card**	**Date**
BP6126-02	16.01	fh600gq	K50	15-JUL-10
Engines	G50, K50, K50-DPM, QSK50 CM2150 K107, QSK50 CM2150 MCRS, QSK50 CM2350 K108, QSK50 CM850 MCRS, QSK50 DF CM850/CM2150 MCRS			

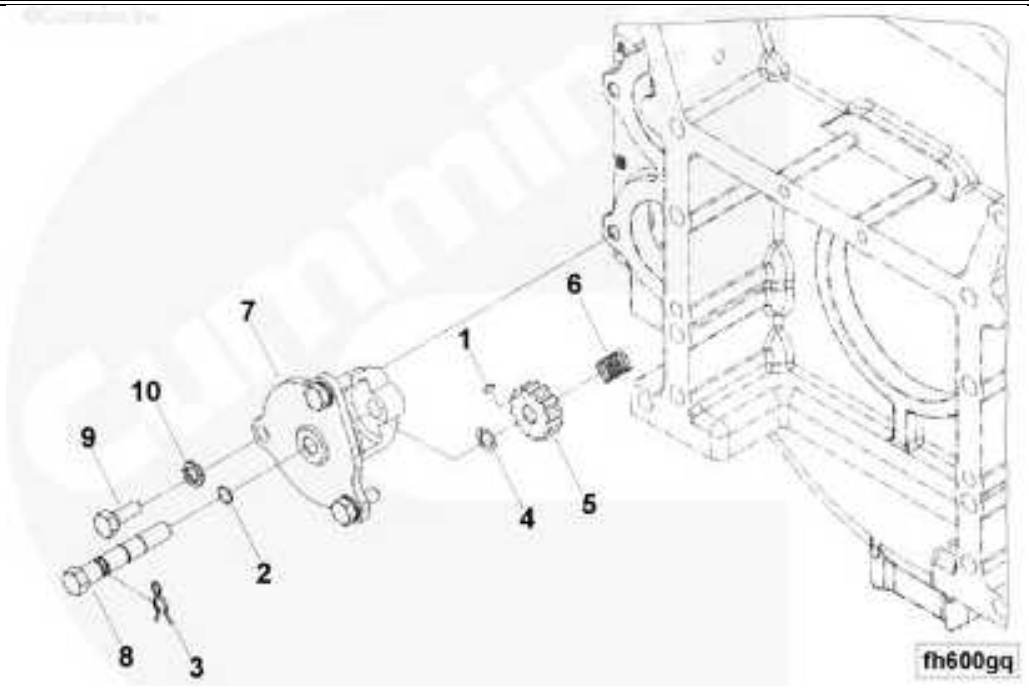

SMALL | MEDIUM | LARGE

Cart	Ref No	Part Number	Part Description	Required	Remarks
View My Cart					
		BP6126-02	Engine Barring Drive		Engine Barring Drive...(More)
					Fuel Control System: Dual STC
					(Stepped Timing Control)
					Water Pump Included: Yes
☐		3201740	Barring Drive	1	
☐	1	S 306	Plain Woodruff Key	1	
☐	2	3913994	O-Ring Seal	1	
☐	3	169834	Clip	1	
☐	4	206090	Retaining Ring	1	
☐	5	206091	Barring Drive Gear	1	
☐	6	206092	Compression Spring	1	
☐	7	206093	Barring Drive Housing	1	
☐	8	3332383	Barring Shaft	1	
		3041271	Barring Mounting Mechanism	1	

☐	9	S 116	Hexagon Head Cap Screw	3	5/8 - 11 X 1 1/2 in.
☐	10	S 603	Lock Washer	3	5/8 in.

© 2017 Cummins Inc., Box 3005, Columbus, IN 47202-3005 U.S.A.
Terms of Use and Disclaimers | Recommended System Requirements
Need Assistance? Please click on the Contact Us button in the top right corner of any page.

Parts Catalog - Option Detail

Electronic Parts Catalog - Option Detail				
Option	**Group**	**Graphic**	**Film Card**	**Date**
XS6025-04	11.01.1	xs601ge	K50	11-AUG-16
Engines	G50, K50, K50-DPM, QSK50 CM2150 K107, QSK50 CM2150 MCRS, QSK50 CM2350 K108, QSK50 CM850 MCRS, QSK50 DF CM850/CM2150 MCRS			

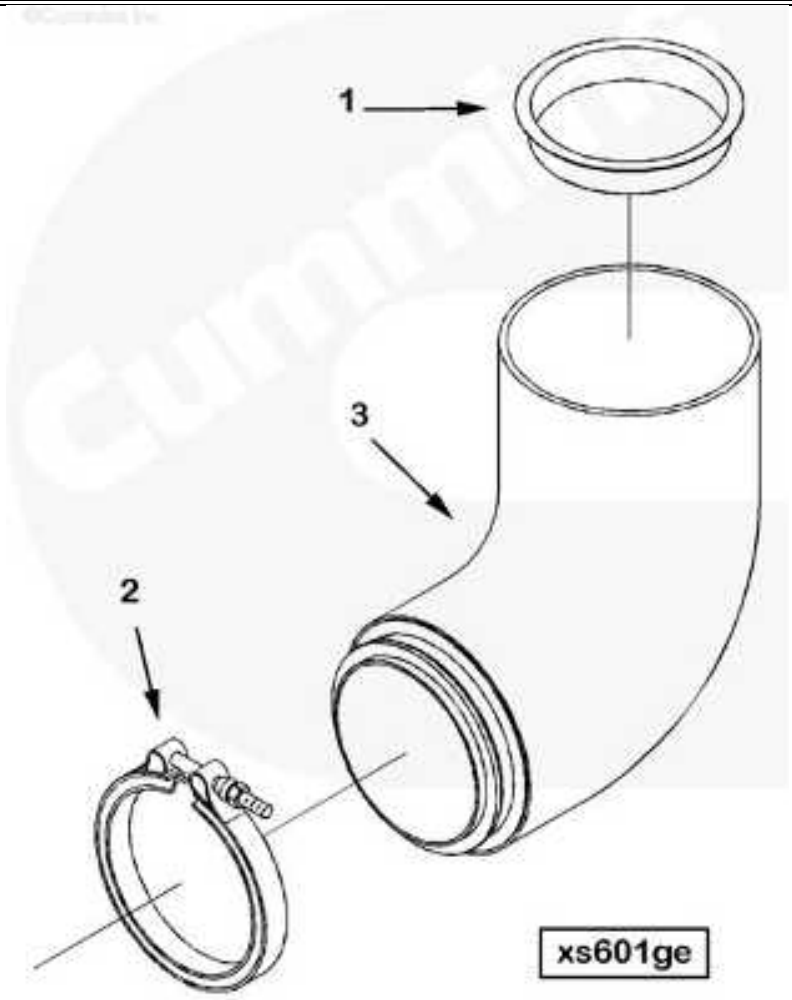

SMALL | MEDIUM | LARGE

Cart	Ref No	Part Number	Part Description	Required	Remarks
View My Cart					
		XS6025-04			Exhaust Outlet Connection
☐	1	3176534	Protective Cover	2	
☐	2	3029631	V Band Clamp	1	
☐	3	3629518	Exhaust Outlet Connection	1	

© 2017 Cummins Inc., Box 3005, Columbus, IN 47202-3005 U.S.A.
Terms of Use and Disclaimers | Recommended System Requirements
Need Assistance? Please click on the Contact Us button in the top right corner of any page.

Parts Catalog - Option Detail

Electronic Parts Catalog - Option Detail				
Option	**Group**	**Graphic**	**Film Card**	**Date**
XM6021-06	11.01	null	K50	07-FEB-15
Engines	G50, K50, K50-DPM, QSK50 CM2150 K107, QSK50 CM2150 MCRS, QSK50 CM2350 K108, QSK50 CM850 MCRS, QSK50 DF CM850/CM2150 MCRS			

Cart	Ref No	Part Number	Part Description	Required	Remarks
View My Cart					
		XM6021-06	Exhaust Manifold		Exhaust Manifold...(More)
					Dry Pulse Exhaust Manifolds
					For Use With KTA50 Engines
					With STC And Outboard
					Aftercooling Only.
					Manifolds Mounted To Provide
					For Turbochargers To Be
					Mounted With Exhaust Outlets
					To The Front Of The Engine.
☐		3043032	Exhaust Outlet Pipe	2	
☐		3626804	Lock Nut	8	3/8 - 24 UNF.
☐		3627095	Hexagon Flange Head Cap Screw	8	
☐		4105317	Turbocharger Gasket	2	
☐		S 109	Hexagon Head Cap Screw	3	3/8 - 16 x 7/8 in.
☐		S 117	Hexagon Head Cap Screw	2	3/8 - 16 x 3/4 in.
☐		S 172 B	Hexagon Head Cap Screw	4	3/8 - 16 X 1 1/8 in.
☐		S 604	Lock Washer	8	3/8 in.
☐		216187	O-Ring Seal	2	
☐		3628902	Plain Washer	5	
☐		3629451	Clip	1	
☐		3632336	Flexible Hose	1	
☐		3630742	Connection Gasket	2	
☐		3632337	Flexible Hose	1	
☐		3037821	Exhaust Manifold Gasket	16	
☐		3046287	Mounting Spacer	64	
☐		3628969	Lock Plate	32	
☐		3631163	Hexagon Flange Head Cap Screw	64	

		3630172	Exhaust Manifold	4	
		3630173	Exhaust Manifold	2	
		3630241	Exhaust Manifold	1	
		3630242	Exhaust Manifold	1	

© 2017 Cummins Inc., Box 3005, Columbus, IN 47202-3005 U.S.A.
Terms of Use and Disclaimers | Recommended System Requirements
Need Assistance? Please click on the Contact Us button in the top right corner of any page.

Parts Catalog - Option Detail

Electronic Parts Catalog - Option Detail				
Option	**Group**	**Graphic**	**Film Card**	**Date**
XM6705	10.01	xm602gp	K50	08-DEC-97
Engines	G50, K50, K50-DPM, QSK50 CM2150 K107, QSK50 CM2150 MCRS, QSK50 CM2350 K108, QSK50 CM850 MCRS, QSK50 DF CM850/CM2150 MCRS			

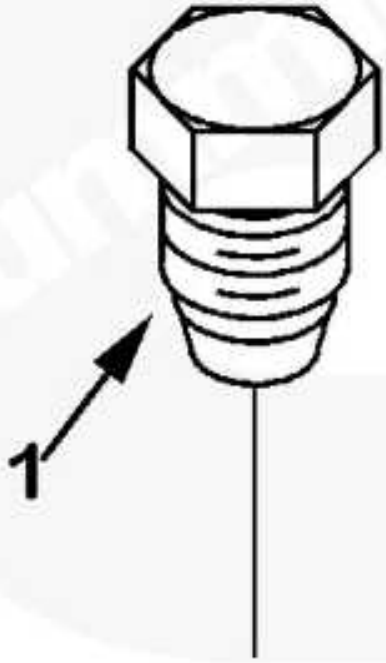

xm602gp

SMALL | MEDIUM | LARGE

Cart	Ref No	Part Number	Part Description	Required	Remarks
View My Cart					
		XM6705	Exhaust Manifold		
☐	1	3630164	Threaded Plug	16	

© 2017 Cummins Inc., Box 3005, Columbus, IN 47202-3005 U.S.A.
Terms of Use and Disclaimers | Recommended System Requirements
Need Assistance? Please click on the Contact Us button in the top right corner of any page.

Parts Catalog - Option Detail

Electronic Parts Catalog - Option Detail				
Option	**Group**	**Graphic**	**Film Card**	**Date**
FA6028-02	08.03	fa604gk	K50	23-JUN-03
Engines	G50, K50, K50-DPM, QSK50 CM2150 K107, QSK50 CM2150 MCRS, QSK50 CM2350 K108, QSK50 CM850 MCRS, QSK50 DF CM850/CM2150 MCRS			

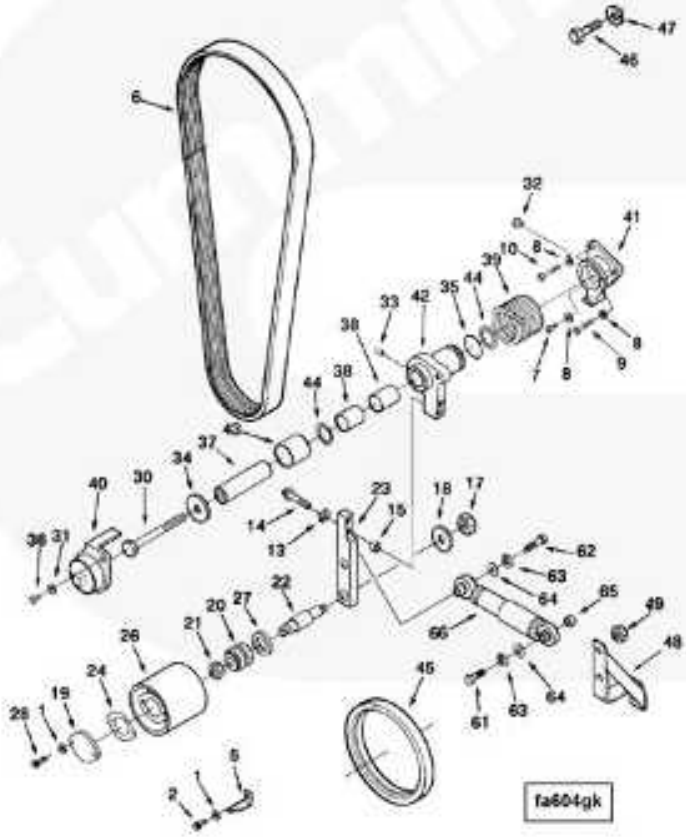

SMALL | MEDIUM | LARGE

Cart	Ref No	Part Number	Part Description	Required	Remarks
View My Cart					
		FA6028-02	Fan Hub		20 inch fan center with...(More)
					customer supplied
					Bearward radiator. Belt
					is supplied in kit.
☐	1	S 605	Lock Washer	1	5/16 in.
☐	2	206527	Twelve Point Cap Screw	1	5/16 - 18 X 5/8 in.
☐	5	206526	Timing Pointer	1	

	6	3003341	V Ribbed Belt	1	
	7	S 153	Hexagon Head Cap Screw	1	7/16 - 14 X 5 in.
	8	S 610	Lock Washer	4	7/16 in.
	9	103009	Hexagon Head Cap Screw	1	7/16 - 14 X 1 1/4 in.
	10	3176465	Hexagon Head Cap Screw	2	7/16 - 14 X 5 1/2 Inch.
		3017670	Fan Idler		
	13	S 604	Lock Washer	2	3/8 in.
	14	205375	Twelve Point Cap Screw	2	3/8 - 16 X 2 1/4 Inch.
	15	3002993	Ring Dowel	2	
		3009480	Idler Pulley	1	
	17	S 249	Regular Hexagon Jam Nut	1	3/4 - 16 UNF
	18	S 640	Plain Washer	1	3/4 in.
	19	207603	Idler Pulley Cover	1	
	20	3003354	Roller Bearing	1	
	21	3004057	Lock Nut	1	3/4 - 16 UNF.
	22	3009481	Idler Shaft	1	
	23	3009482	Idler Pulley Bracket	1	
	24	3014449	Flange Gasket	1	
		3016766	Idler Pulley	1	
	26	3009483	Idler Pulley	1	
	27	3065830	Oil Seal	1	
	28	S 102	Hexagon Head Cap Screw	2	5/16 - 18 X 1 in.
	1	S 605	Lock Washer	2	5/16 in.
		4101093	Idler Lever	1	
	30	3628104	Hexagon Head Cap Screw	1	
	31	S 610	Lock Washer	1	7/16 in.
	32	S 2268	Grease Fitting	1	
	33	68171	Roll Pin	2	
	34	127454	Plain Washer	1	5/8 Inch.
	35	145581	O-Ring Seal	1	
	36	185804	Hexagon Head Cap Screw	1	7/16 - 14 X 1 3/8 in.
	37	3009475	Pivot Shaft	1	
	38	3009477	Sleeve	2	
	39	3019416	Torsion Spring	1	
	40	3023499	Idler Lever Cap	1	
	41	3177126	Pivot Shaft Support	1	
	42	4101094	Idler Lever	1	

	43	3177128	Wear Sleeve	1	
	44	3177129	Thrust Bearing	2	
	45	3016792	Oil Seal	1	
	46	S 195 B	Hexagon Head Cap Screw	6	3/4 - 10 X 3 1/4 in.
	47	S 611	Lock Washer	6	3/4 in.
	48	3016206	Shock Absorber Bracket		
	49	S 217	Heavy Hexagon Nut	1	7/16 - 14 UNC.
	61	S 121 B	Hexagon Head Cap Screw	1	7/16 - 14 X 2 1/2 in.
	62	S 162 A	Hexagon Head Cap Screw	1	7/16 - 14 X 2 3/4 in.
	63	S 610	Lock Washer	2	7/16 in.
	64	S 622	Plain Washer	2	3/8 in.
	65	66747	Mounting Spacer		
	66	3008018	Shock Absorber		

© 2017 Cummins Inc., Box 3005, Columbus, IN 47202-3005 U.S.A.
Terms of Use and Disclaimers | Recommended System Requirements
Need Assistance? Please click on the Contact Us button in the top right corner of any page.

Parts Catalog - Option Detail

Electronic Parts Catalog - Option Detail				
Option	**Group**	**Graphic**	**Film Card**	**Date**
OB6179-06	07.02	null	K50	16-DEC-15
Engines	G50, K50, K50-DPM, QSK50 CM2150 K107, QSK50 CM2150 MCRS, QSK50 CM2350 K108, QSK50 CM850 MCRS, QSK50 DF CM850/CM2150 MCRS			

Cart	Ref No	Part Number	Part Description	Required	Remarks
View My Cart					
		OB6179-06	Oil Fill Arrangement		Oil Fill Arrangment...(More)
					Oil Fill Location: Left Bank
					First Opening From Rear
					Dipstick Location: Left Bank
					First Opening From Rear
					Breather Arrangement: Single
					Bank
					Right Bank Breather Drain
					Location: Third Opening From
					Rear
					Crankcase Breather Mounting
					Location: Right Bank In Line
					With #3 Cylinder
					Usage Restriction: With Left
					Bank Mounted Lube Oil
					Filters Only
					Eagle Based OCV System: No
☐		3027935	Decal	1	
☐		S 109	Hexagon Head Cap Screw	13	3/8 - 16 X 7/8 in.
☐		3014766	Captive Washer Cap Screw	89	
☐		3175856	Hand Hole Gasket	7	
☐		3628902	Plain Washer	13	
☐		3628229	Hand Hole Cover	4	
☐		3629112	Filler Cap	1	
☐		3064321	Captive Washer Cap Screw	1	3/8 - 16 X 7/8 in.
☐		3635372	Hand Hole Cover	1	
☐		3178838	Plain Street Pipe Elbow	1	

		3630986	Plain Hose Coupling	1	
		3642547	Hand Hole Cover	1	
		179904	Hose Clamp	2	3/8 - 7/8 in.
		3632449	Plain Hose	1	
		43828 C	Hose Clamp	3	1 9/16 - 2 1/2 in.
		S 604	Lock Washer	1	3/8 in.
		3642285	Tube Brace	1	
		172558	Clip	1	
		3201128	Regular Hexagon Nut	1	3/8 - 16 UNC.
		3631572	Molded Hose	1	
		4344108	Crankcase Breather	1	
		3628604	Pipe Plug	1	
		3631539	Crankcase Breather	1	
		3631578	Plain Hose	1	

© 2017 Cummins Inc., Box 3005, Columbus, IN 47202-3005 U.S.A.
Terms of Use and Disclaimers | Recommended System Requirements
Need Assistance? Please click on the Contact Us button in the top right corner of any page.

Parts Catalog - Option Detail

Electronic Parts Catalog - Option Detail				
Option	**Group**	**Graphic**	**Film Card**	**Date**
OB6787-01	07.02	ob603gm	K50	03-JUL-00
Engines	G50, K50, K50-DPM, QSK50 CM2150 K107, QSK50 CM2150 MCRS, QSK50 CM2350 K108, QSK50 CM850 MCRS, QSK50 DF CM850/CM2150 MCRS			

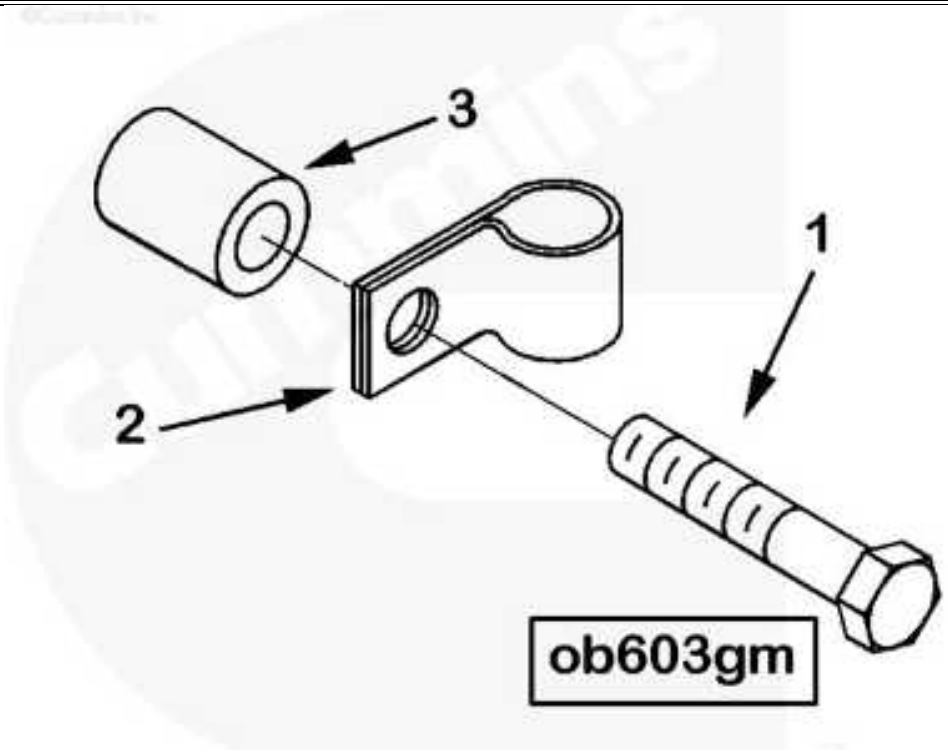

SMALL | MEDIUM | LARGE

Cart	Ref No	Part Number	Part Description	Required	Remarks
View My Cart					
		OB6787-01	Filler And Breather		Breather vent for use with...(More)
					KTA and KTTA 50 LTA engines
					only.
☐	1	S 166 B	Hexagon Head Cap Screw	1	3/8 - 16 X 5 3/4 Inch.
☐	2	172558	Clip	1	
☐	3	3202032	Mounting Spacer	1	

© 2017 Cummins Inc., Box 3005, Columbus, IN 47202-3005 U.S.A.
Terms of Use and Disclaimers | Recommended System Requirements
Need Assistance? Please click on the Contact Us button in the top right corner of any page.

Parts Catalog - Option Detail

Electronic Parts Catalog - Option Detail				
Option	**Group**	**Graphic**	**Film Card**	**Date**
FW6009	16.02	fw600gd	K50	30-SEP-89
Engines	G50, K50, K50-DPM, QSK50 CM2150 K107, QSK50 CM2150 MCRS, QSK50 CM2350 K108, QSK50 CM850 MCRS, QSK50 DF CM850/CM2150 MCRS			

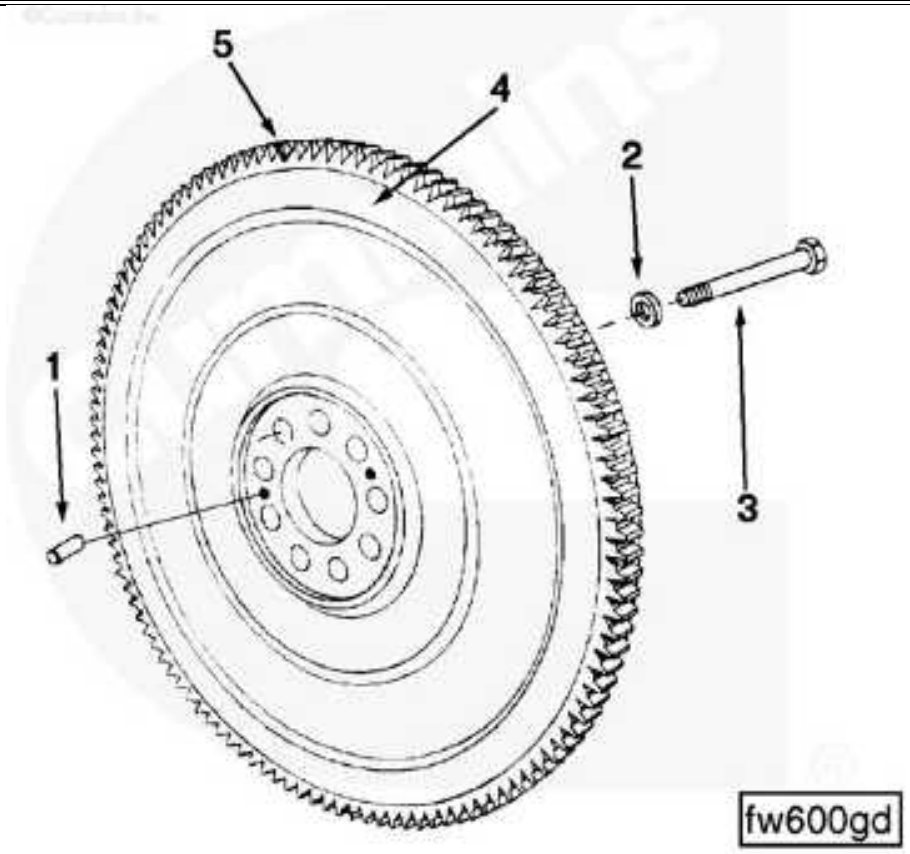

SMALL | MEDIUM | LARGE

Cart	Ref No	Part Number	Part Description	Required	Remarks
View My Cart					
		FW6009	Flywheel		Flywheel for 14in. and 18in....(More)
					over center clutch use with
					SAE no. '0' flywheel housing.
☐	1	131584	Roll Pin	1	
☐	2	205059	Plain Washer	12	3/4 Inch.
☐	3	3023536	Fracture Resistant Screw	12	3/4 - 16 X 3 3/4 Inch.
☐		3012603	Flywheel	1	
	4	3006189	Flywheel	1	
☐	5	124507	Flywheel Ring Gear	1	

© 2017 Cummins Inc., Box 3005, Columbus, IN 47202-3005 U.S.A.
Terms of Use and Disclaimers | Recommended System Requirements
Need Assistance? Please click on the Contact Us button in the top right corner of any page.

Parts Catalog - Option Detail

Electronic Parts Catalog - Option Detail				
Option	**Group**	**Graphic**	**Film Card**	**Date**
FH6024-07	16.01	null	K50	19-OCT-15
Engines	G50, K50, K50-DPM, QSK50 CM2150 K107, QSK50 CM2150 MCRS, QSK50 CM2350 K108, QSK50 CM850 MCRS, QSK50 DF CM850/CM2150 MCRS			

Cart	Ref No	Part Number	Part Description	Required	Remarks
View My Cart					
		FH6024-07	Flywheel Housing		HOUSING,FLYWHEEL...(More)
					Flywheel Housing SAE: SAE 0
					Flywheel Housing Material:
					Grey Cast Iron
					Clutch Type: Dry
					Number Of Starting Positions:
					4
					Starter Motor Flange: SAE #3
					(3 Bolt X 120 Degrees)
					Starter Mounting Hole Thread
					Size: 5/8 - 11 UNC-2B
					Tachometer Sensor Mounting
					Hole Size: 1 X 5/8 - 18 And
					1 X 3/4 - 16
		3177396	Flywheel Housing	1	
☐		S 167 A	Hexagon Head Cap Screw	2	1/4 - 20 X 7/8 in.
☐		S 600	Lock Washer	2	1/4 in.
☐		145539	O-Ring Seal	2	
☐		3010410	Access Hole Cover	2	
☐		3176637	Flywheel Housing	1	
☐		3642365	Oil Seal	1	
		3177397	Flywheel Housing Mounting	1	
☐		3648764	Hexagon Head Cap Screw	10	
☐		S 610	Lock Washer	2	7/16 in.
☐		S 611	Lock Washer	12	3/4 in.
☐		70662	Pin Dowel	1	
☐		205565	Twelve Point Cap Screw	2	3/4 - 10 X 7 in.

		3176465	Hexagon Head Cap Screw	2	7/16 - 14 X 5 1/2 in.
		3630874	Flywheel Housing Gasket	1	
		3634269	Diamond Dowel	1	

© 2017 Cummins Inc., Box 3005, Columbus, IN 47202-3005 U.S.A.
Terms of Use and Disclaimers | Recommended System Requirements
Need Assistance? Please click on the Contact Us button in the top right corner of any page.

Parts Catalog - Option Detail

Electronic Parts Catalog - Option Detail				
Option	**Group**	**Graphic**	**Film Card**	**Date**
EM6001	16.03	em601gn	K50	30-SEP-89
Engines	G50, K50, K50-DPM, QSK50 CM2150 K107, QSK50 CM2150 MCRS, QSK50 CM2350 K108, QSK50 CM850 MCRS, QSK50 DF CM850/CM2150 MCRS			

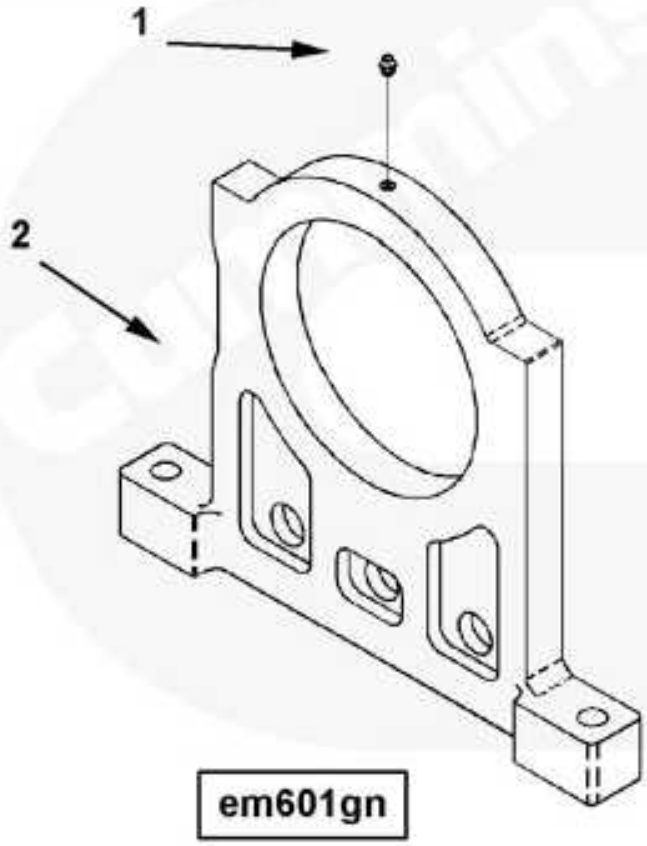

SMALL | MEDIUM | LARGE

Cart	Ref No	Part Number	Part Description	Required	Remarks
View My Cart					
		EM6001	Front Engine Support		Trunnion type front support.
☐		3176012	Front Engine Supply Assembly	1	
☐	1	S 2268	Grease Fitting	1	
☐	2	3177812	Front Engine Support	1	

© 2017 Cummins Inc., Box 3005, Columbus, IN 47202-3005 U.S.A.
Terms of Use and Disclaimers | Recommended System Requirements
Need Assistance? Please click on the Contact Us button in the top right corner of any page.

Parts Catalog - Option Detail

Electronic Parts Catalog - Option Detail				
Option	**Group**	**Graphic**	**Film Card**	**Date**
FA6745-01	08.03	fa606gq	K50	16-APR-12
Engines	G50, K50, K50-DPM, QSK50 CM2150 K107, QSK50 CM2150 MCRS, QSK50 CM2350 K108, QSK50 CM850 MCRS, QSK50 DF CM850/CM2150 MCRS			

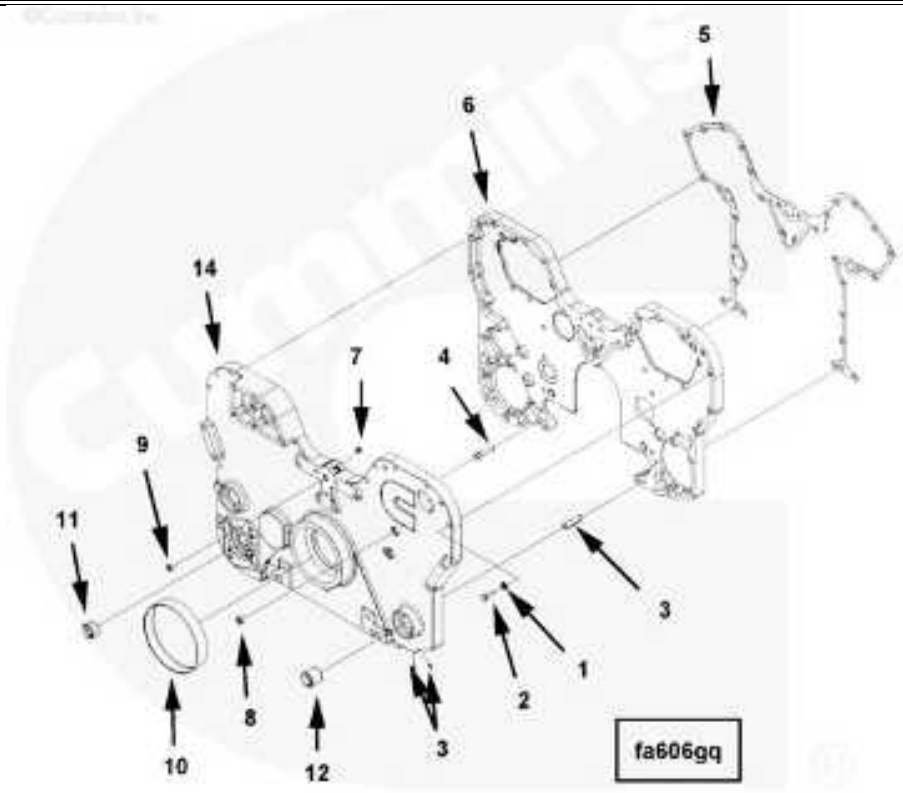

SMALL | MEDIUM | LARGE

Cart	Ref No	Part Number	Part Description	Required	Remarks
View My Cart					
		FA6745-01	Front Gear Housing		Front gear housing...(More)
					Engine Family: K38 And K50
					front hydraulic pump drive
					provision: Yes sea water
					pump provision: No logo
					included: Cummins logo
					location: Front gear cover
					left side.
☐	1	S 610	Lock Washer	15	7/16 in.
☐	2	103009	Hexagon Head Cap Screw	15	7/16 - 14 X 1 1/4 in.
☐	3	138912	Pin Dowel	1	

	4	3176618	Diamond Dowel	1	
	5	3644502	Gear Housing Gasket	1	
	6	3176918	Gear Housing	1	
		3643233	Gear Cover	1	
	7	3628605	Pipe Plug	2	1/4 - 18.
	8	3628606	Pipe Plug	1	1/2 - 14.
	9	3628609	Pipe Plug	1	3/8-18.
		3643234	Gear Cover	1	
	10	205683	Bushing	1	
	11	3177509	Bushing	1	
	12	3177510	Bushing	2	
		3643235	Gear Cover	1	
	13	3640775	Tamper Proof Seal	6	
	14	3643236	Gear Cover	1	

© 2017 Cummins Inc., Box 3005, Columbus, IN 47202-3005 U.S.A.
Terms of Use and Disclaimers | Recommended System Requirements
Need Assistance? Please click on the Contact Us button in the top right corner of any page.

Parts Catalog - Option Detail

Electronic Parts Catalog - Option Detail				
Option	**Group**	**Graphic**	**Film Card**	**Date**
FS6013-02	06.08	fs600gn	K50	29-SEP-97
Engines	G50, K50, K50-DPM, QSK50 CM2150 K107, QSK50 CM2150 MCRS, QSK50 CM2350 K108, QSK50 CM850 MCRS, QSK50 DF CM850/CM2150 MCRS			

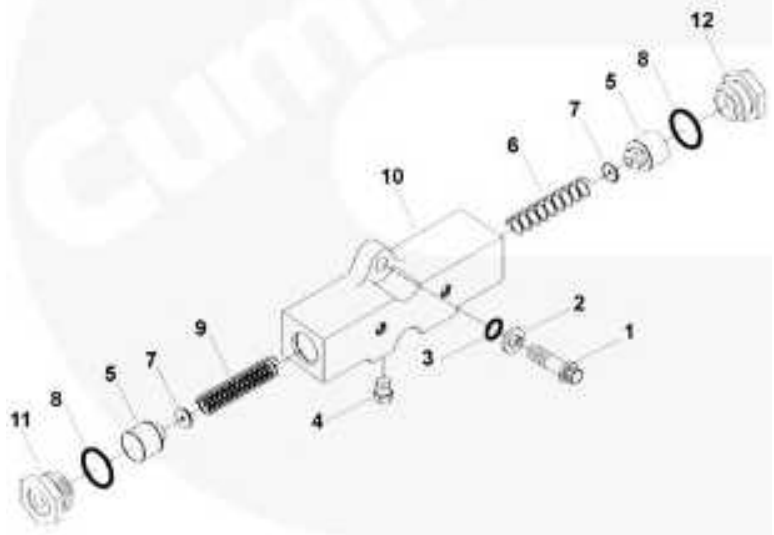

fs600gn

SMALL | MEDIUM | LARGE

Cart	Ref No	Part Number	Part Description	Required	Remarks
View My Cart					
		FS6013-02	Fuel Block		Standard fuel block with...(More)
					integral check valves.
☐	1	S 604	Lock Washer	2	3/8 in.
☐	2	191772	Twelve Point Cap Screw	2	3/8 - 16 X 1 1/4 in.
☐	3	3818885	O-Ring Seal	2	
☐		3629408	Fuel Block Connection	1	
	4	3631805	Pipe Plug	2	

	5	650826	Fuel Control Plunger	2	
	6	650829	Compression Spring	1	
	7	651045	Grommet Seal	2	15/32 in.
	8	3046943	O-Ring Seal	2	
	9	3277045	Compression Spring	1	
	10	3629409	Fuel Block Connection	1	
	11	3629410	Spring Retainer	1	
	12	3629411	Pressure Regulator Valve Seat	1	

© 2017 Cummins Inc., Box 3005, Columbus, IN 47202-3005 U.S.A.
Terms of Use and Disclaimers | Recommended System Requirements
Need Assistance? Please click on the Contact Us button in the top right corner of any page.

Parts Catalog - Option Detail

Electronic Parts Catalog - Option Detail				
Option	**Group**	**Graphic**	**Film Card**	**Date**
FF6063-08	06.04	ff606gg	K50	03-MAY-11
Engines	G50, K50, K50-DPM, QSK50 CM2150 K107, QSK50 CM2150 MCRS, QSK50 CM2350 K108, QSK50 CM850 MCRS, QSK50 DF CM850/CM2150 MCRS			

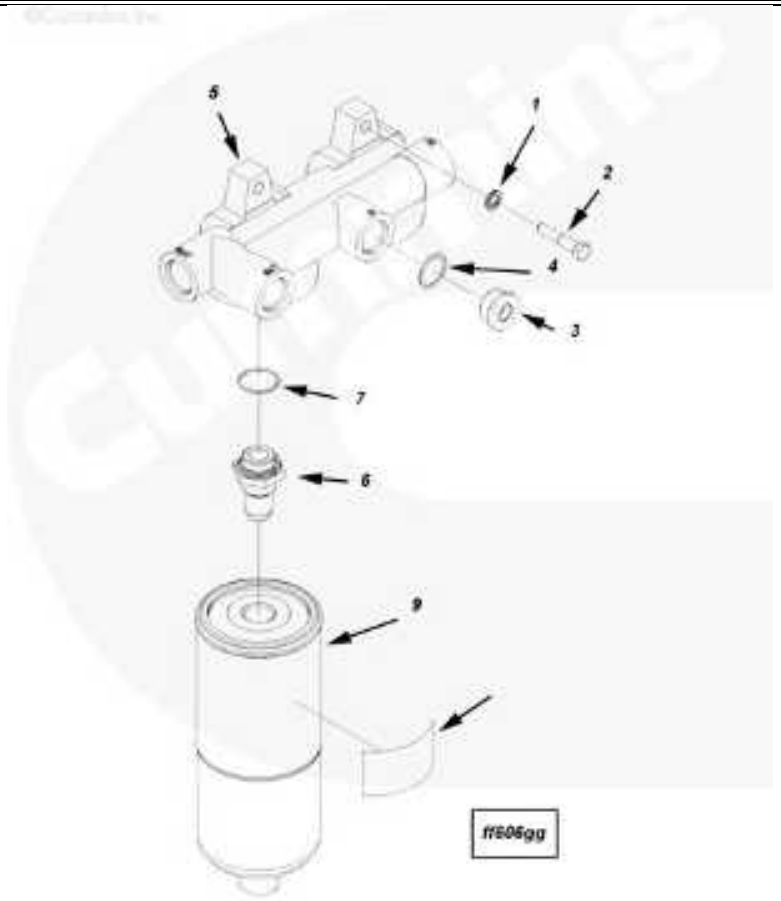

SMALL | MEDIUM | LARGE

Cart	Ref No	Part Number	Part Description	Required	Remarks
View My Cart					
		FF6063-08	Fuel Filter		Fuel filter...(More)
					dual element 10 micron fuel
					filter/water separator with
					replaceable spin-on
					cartridges
					Mounted on left bank side of
					the engine below the fuel

					pump.
		3004920	Fuel Filter Mounting	1	
	1	S 610	Lock Washer	2	7/16 in.
	2	106069	Hexagon Head Cap Screw	2	7/16 - 14 X 2 in.
		3640338	Fuel Filter Head	1	
		3201583	Threaded Plug	2	1 5/16 - 12 UNF.
	3	3040911	Threaded Plug	1	
	4	3201585	O-Ring Seal	1	
	5	3630741	Fuel Filter Head	1	
	6	4916693	Filter Head Adapter	2	
	7	4975427	O-Ring Seal	2	
	8	3642787	Information Decal	2	
	9	4095189	Fuel Water Separator	2	

© 2017 Cummins Inc., Box 3005, Columbus, IN 47202-3005 U.S.A.
Terms of Use and Disclaimers | Recommended System Requirements
Need Assistance? Please click on the Contact Us button in the top right corner of any page.

Parts Catalog - Option Detail

Electronic Parts Catalog - Option Detail				
Option	**Group**	**Graphic**	**Film Card**	**Date**
FF6736-01	06.04.1	ff600ge	K50	28-JAN-02
Engines	G50, K50, K50-DPM, QSK50 CM2150 K107, QSK50 CM2150 MCRS, QSK50 CM2350 K108, QSK50 CM850 MCRS, QSK50 DF CM850/CM2150 MCRS			

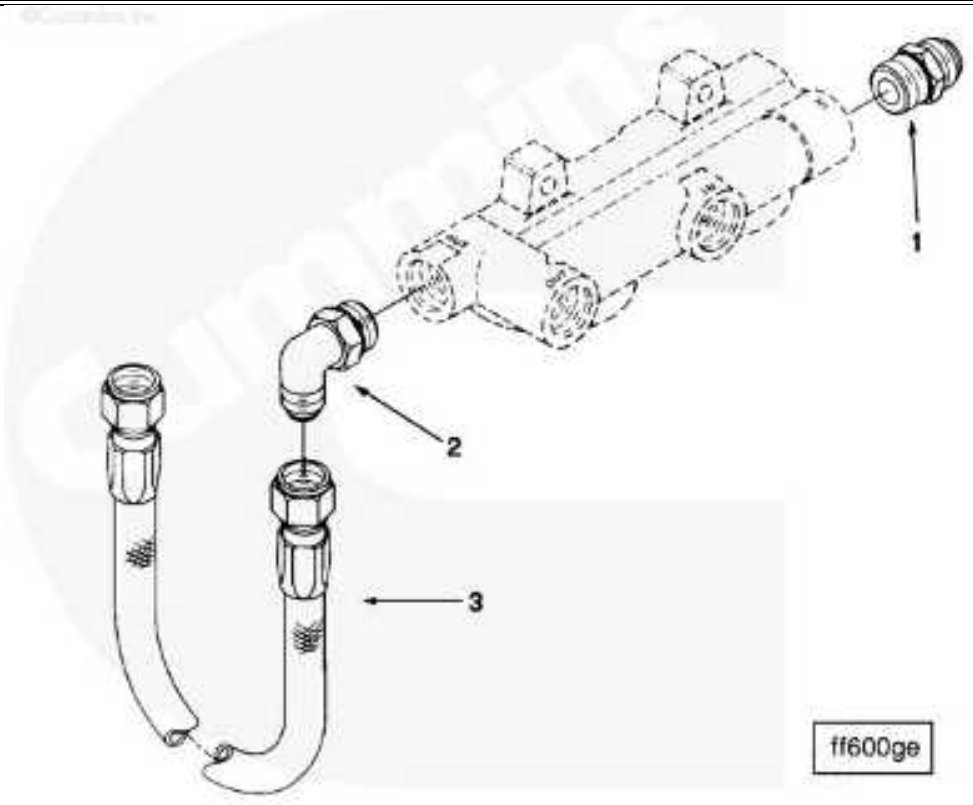

SMALL | MEDIUM | LARGE

Cart	Ref No	Part Number	Part Description	Required	Remarks
View My Cart					
		FF6736-01	Fuel Connection		Fuel filter plumbing for dual...(More)
					element fuel filter or fuel
					filter/water separator
					mounted on the left bank side
					of the engine below the fuel
					pump. Includes straight 1
					5/16inch 12JIC fuel inlet
					fitting. For use with KTA38-
					G2 D233020DX02 (special for
					Fermont only) KTTA38, KTA50,
					and KTTA50.

	1	3032627	Male Union	1	
		3100524	Male Union	1	
		3201585	O-Ring Seal	1	
	2	3032628	Male Union Elbow	1	
	3	3634522	Flexible Hose	1	

© 2017 Cummins Inc., Box 3005, Columbus, IN 47202-3005 U.S.A.
Terms of Use and Disclaimers | Recommended System Requirements
Need Assistance? Please click on the Contact Us button in the top right corner of any page.

Parts Catalog - Option Detail

Electronic Parts Catalog - Option Detail				
Option	**Group**	**Graphic**	**Film Card**	**Date**
FP6771	05.01.4	fp600ge	K50	20-JAN-94
Engines	G50, K50, K50-DPM, QSK50 CM2150 K107, QSK50 CM2150 MCRS, QSK50 CM2350 K108, QSK50 CM850 MCRS, QSK50 DF CM850/CM2150 MCRS			

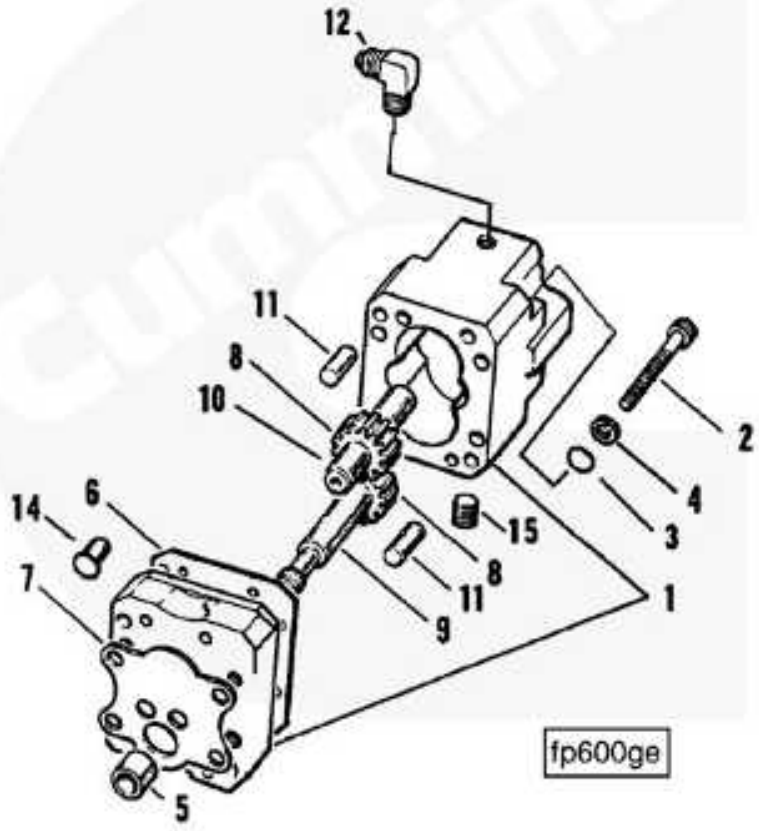

SMALL | MEDIUM | LARGE

Cart	Ref No	Part Number	Part Description	Required	Remarks
View My Cart					
		FP6771	Fuel Gear Pump		
☐		3034221	Gear Fuel Pump		
	1	3033739	Gear Fuel Pump	1	
☐	2	100129	Socket Head Cap Screw	6	1/4 - 20 X 3 Inch.
☐	3	70704	Plain Washer	6	1/4 in.
☐	4	181466	Lock Washer	6	1/4 in.
☐	5	3033719	Ring Dowel	1	
☐	6	110855	Fuel Pump Gasket	1	
☐	7	3026163	Fuel Pump Gasket	1	

		3016611	Gear And Shaft	1	
	8	119364	Fuel Pumping Gear	1	
	9	100217	Fuel Pump Drive Shaft	1	
		3019617	Gear And Shaft	1	
	8	119364	Fuel Pumping Gear	1	
	10	175865	Fuel Pump Shaft	1	
	11	64816 A	Pin Dowel	2	
	14	3050624	Pressure Regulator Valve	1	
	15	3033742	Threaded Plug	2	
	12	3033740	Check Valve	1	

© 2017 Cummins Inc., Box 3005, Columbus, IN 47202-3005 U.S.A.
Terms of Use and Disclaimers | Recommended System Requirements
Need Assistance? Please click on the Contact Us button in the top right corner of any page.

Parts Catalog - Option Detail

Electronic Parts Catalog - Option Detail				
Option	**Group**	**Graphic**	**Film Card**	**Date**
BP6739-13	06.01.6	bp602gi	K50	19-JUN-13
Engines	G50, K50, K50-DPM, QSK50 CM2150 K107, QSK50 CM2150 MCRS, QSK50 CM2350 K108, QSK50 CM850 MCRS, QSK50 DF CM850/CM2150 MCRS			

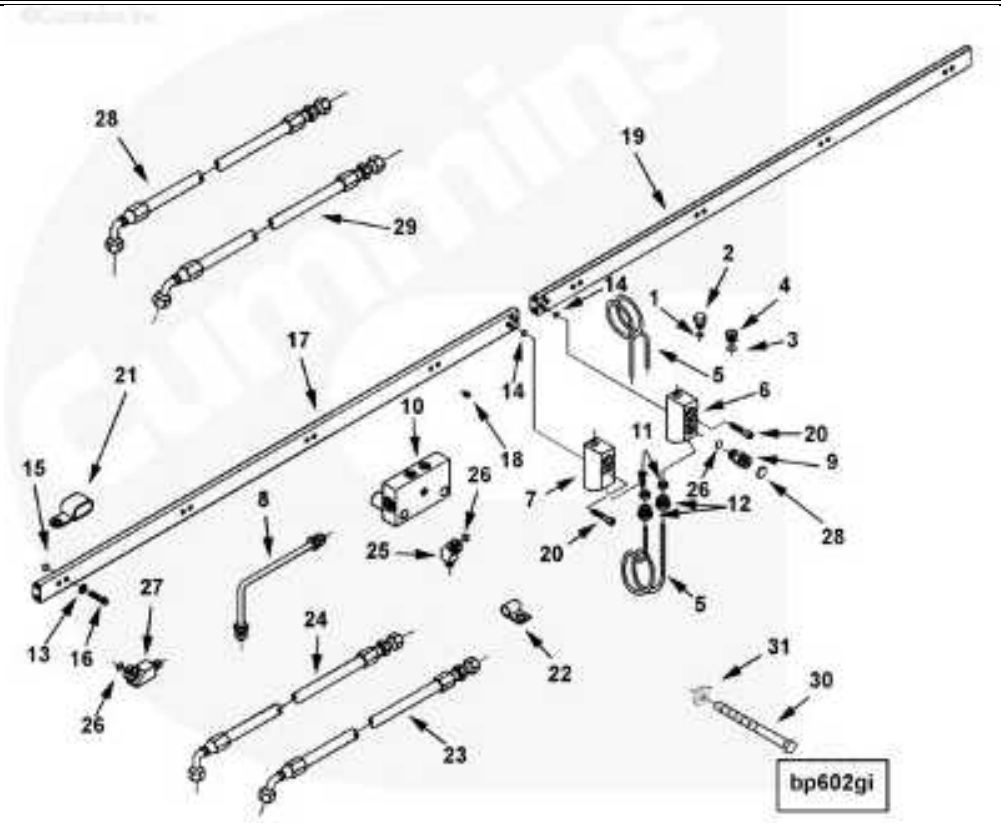

SMALL | MEDIUM | LARGE

Cart	Ref No	Part Number	Part Description	Required	Remarks
View My Cart					
		BP6739-13	Fuel Tubing		Fuel manifold for:...(More)
					KTA50-C/KTTA50-C with
					side mounted aftercoolers.
					(LTA and outboard) KTA50-L
					/KTTA50-L with side mounted
					aftercoolers. (LTA and
					outboard) KTA50-G with low
					temperature aftercoolers
					dual STC engines only.
					Includes commercial hose.
☐		3023217	Threaded Plug	4	7/16 - 20 UNF

	1	3036666	O-Ring Seal	4	
	2	3630034	Threaded Plug	4	
		3067424	Threaded Plug	4	1/2 - 20 UNF
	3	3037236	O-Ring Seal	4	Ref. SPT 97T10
	4	3067347	Threaded Plug	4	1/2-20 Thd
	5	3176710	Fuel Supply Tube	2	
	6	3628517	Fuel Block Connection	2	
	7	3628518	Fuel Block Connection	2	
	8	3628931	Fuel Supply Tube	4	
		3630364	Fuel Block Connection	2	
		3634685	Male Union	2	
	28	3037537	O-Ring Seal	1	
	9	3634687	Male Union	1	
	26	3922794	O-Ring Seal	1	
	10	3630358	Fuel Block Connection	2	
		3633045	Tube Connector	12	
	11	3633046	Ferrule Seal	12	
	12	3633047	Tube Nut	12	
	13	127018	Plain Washer	32	1/4 in.
	14	131026	O-Ring Seal	8	
	15	3001340	O-Ring Seal	32	
	16	3001811	Twelve Point Cap Screw	32	1/4 - 20 X 1 Inch.
		3633216	Fuel Manifold	2	
	17	3633212	Fuel Manifold	2	
	18	3628610	Pipe Plug	8	
		3633217	Fuel Manifold	2	
	19	3633213	Fuel Manifold	2	
	18	3628610	Pipe Plug	8	
	20	3175074	Socket Head Cap Screw	8	1/4 - 20 X 1 1/4 Inch.
	21	3629516	Clip	6	
	22	3627412	Clip	2	
	23	3634389	Flexible Hose	2	
	24	3634395	Flexible Hose	2	
		3095292	Male Adapter Elbow	4	
	25	3628633	Male Adapter Elbow	4	

	26	3922794	O-Ring Seal	4	
		3630764	Male Union Tee	2	
	27	3630765	Plain Adapter Tee	2	
	26	3922794	O-Ring Seal	2	
	28	3634390	Flexible Hose	1	
	29	3634396	Flexible Hose	1	
	30	S 169 A	Hexagon Head Cap Screw	4	3/8 - 16 X 4 1/2 Inch.
	31	108330	Plain Washer	4	3/8 in.

© 2017 Cummins Inc., Box 3005, Columbus, IN 47202-3005 U.S.A.
Terms of Use and Disclaimers | Recommended System Requirements
Need Assistance? Please click on the Contact Us button in the top right corner of any page.

Parts Catalog - Option Detail

Electronic Parts Catalog - Option Detail				
Option	**Group**	**Graphic**	**Film Card**	**Date**
FP6180-01	05.01	sa600ge	K50	25-DEC-09
Engines	G50, K50, K50-DPM, QSK50 CM2150 K107, QSK50 CM2150 MCRS, QSK50 CM2350 K108, QSK50 CM850 MCRS, QSK50 DF CM850/CM2150 MCRS			

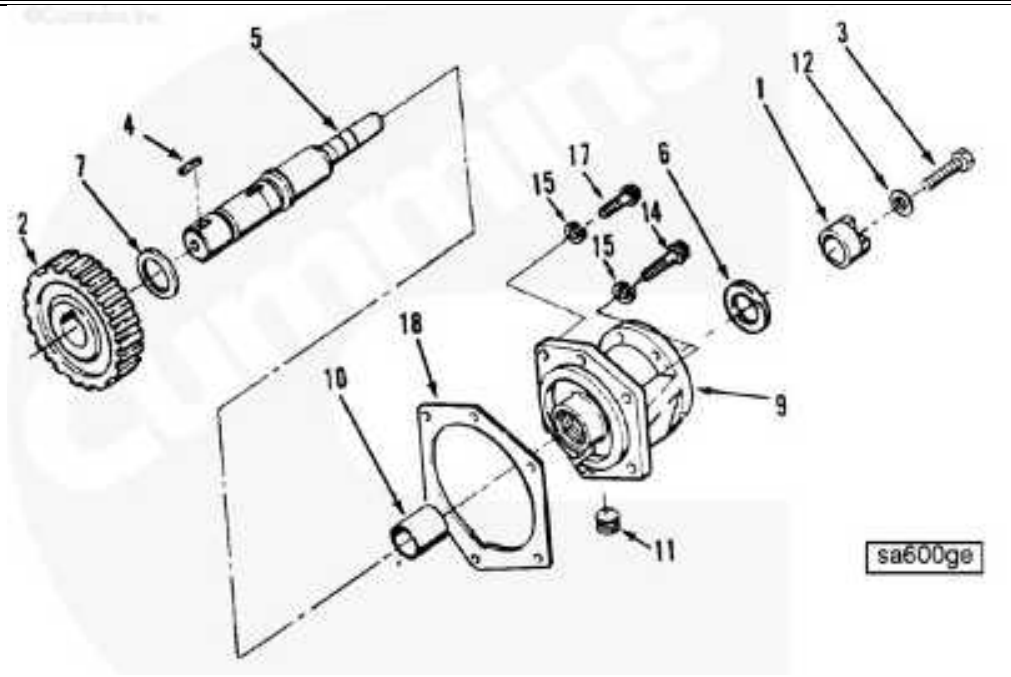

SMALL | MEDIUM | LARGE

Cart	Ref No	Part Number	Part Description	Required	Remarks
View My Cart					
		FP6180-01	Fuel Pump		
☐		3022725	Fuel Pump Support	1	
☐	1	158826	Jaw Coupling Hub	1	
☐	2	4953332	Accessory Drive Gear	1	
☐	3	129510	Hexagon Head Cap Screw	1	3/8 - 16 X 1 Inch.
☐	4	S 316	Plain Woodruff Key	2	
☐	5	206646	Fuel Pump Drive Shaft	1	
☐	6	3014103	Plain Washer	1	1 1/32 Inch.
☐	7	3026557	Thrust Bearing	1	
☐	9	3631005	Fuel Pump Support	1	
☐	10	3629856	Bushing	1	
☐		3629857	Bushing	1	
☐		3640773	Tamper Proof Seal	1	
		3629858	Fuel Pump Support	1	

	12	170664	Plain Washer	1	3/8 Inch.
	13	206664	Gear Spacer	1	
	14	S 162 A	Hexagon Head Cap Screw	4	7/16 - 14 X 2 3/4 in.
	15	S 610	Lock Washer	6	7/16 in.
	17	103023	Hexagon Head Cap Screw	2	7/16 - 14 X 1 in.
	18	3046852	Accessory Drive Support Gasket	1	

© 2017 Cummins Inc., Box 3005, Columbus, IN 47202-3005 U.S.A.
Terms of Use and Disclaimers | Recommended System Requirements
Need Assistance? Please click on the Contact Us button in the top right corner of any page.

Parts Catalog - Option Detail

Electronic Parts Catalog - Option Detail				
Option	**Group**	**Graphic**	**Film Card**	**Date**
FP6771-04	05.01	fp400gw	K50	17-FEB-11
Engines	G50, K50, K50-DPM, QSK50 CM2150 K107, QSK50 CM2150 MCRS, QSK50 CM2350 K108, QSK50 CM850 MCRS, QSK50 DF CM850/CM2150 MCRS			

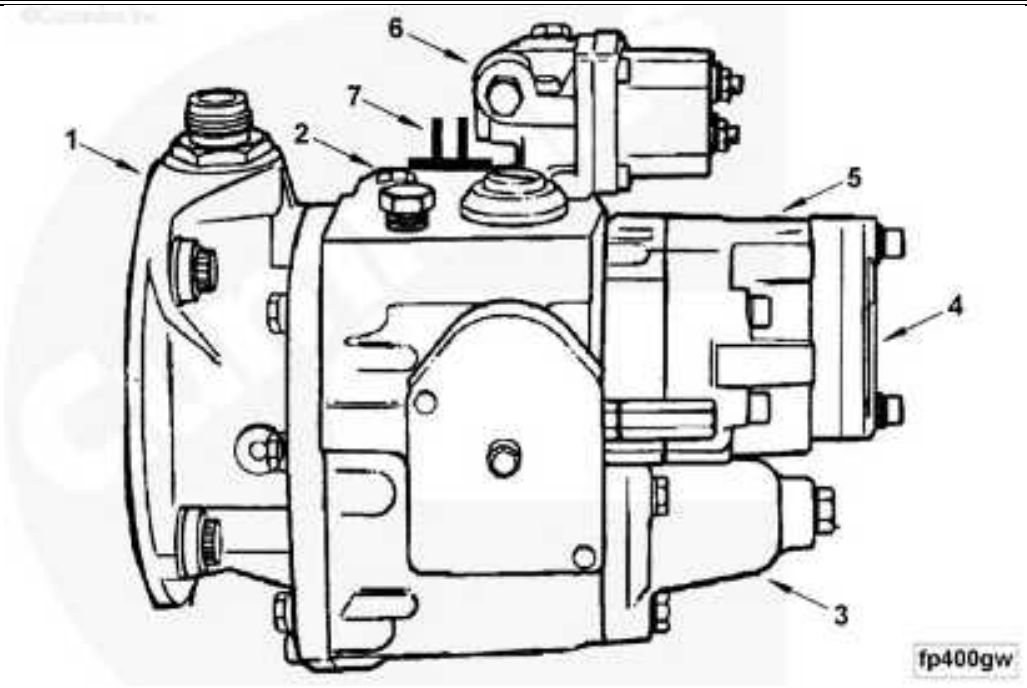

SMALL | MEDIUM | LARGE

Cart	Ref No	Part Number	Part Description	Required	Remarks
View My Cart					
		FP6771-04	Fuel Pump		Cummins electric fuel control...(More)
					governor. (24 volt DC
					normally closed) system.
					Fuel pump: PT type G.
					Fuel pump governor: Limiting
					speed. EFC governor actuator
					is installed in the fuel
					pump AFC cavity. Includes
					fuel pump and accessory drive
					for use with Cummins electric
					fuel control governor.
					Includes 'High Flow' actuator
					and dedicated housing.
					Note: The governor actuator

					moves to the fully closed
					position with electrical
					failure, or shutdown.
		3075537	Fuel Pump	1	
	1	3030267	Fuel Pump Front Cover	1	
	2	3279620	Fuel Pump Housing	1	
	3	3021977	Spring Cover	1	
	5	3034221	Gear Fuel Pump	1	
	7	3085220	Electronic Fuel Control Actuator	1	
	4	AR12112	Fuel Pump And Mounting Damper	1	
6				1	Reference FV8036

© 2017 Cummins Inc., Box 3005, Columbus, IN 47202-3005 U.S.A.
Terms of Use and Disclaimers | Recommended System Requirements
Need Assistance? Please click on the Contact Us button in the top right corner of any page.

Parts Catalog - Option Detail

Electronic Parts Catalog - Option Detail				
Option	**Group**	**Graphic**	**Film Card**	**Date**
FP6771	05.01.3	fp401ge	K50	08-SEP-93
Engines	G50, K50, K50-DPM, QSK50 CM2150 K107, QSK50 CM2150 MCRS, QSK50 CM2350 K108, QSK50 CM850 MCRS, QSK50 DF CM850/CM2150 MCRS			

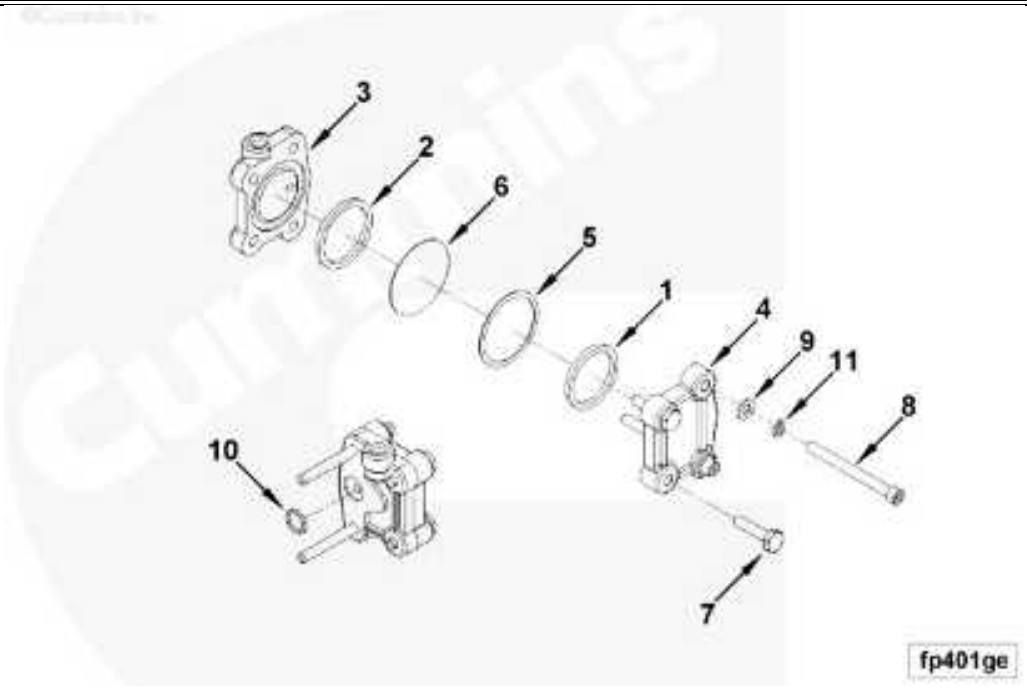

SMALL | MEDIUM | LARGE

Cart	Ref No	Part Number	Part Description	Required	Remarks
View My Cart					
		FP6771	Fuel Pump And Damper Mounting		
☐		AR12112	Fuel Pump And Mounting Damper		
☐		BM76340	Fuel Pump Damper	1	
☐	1	100099	Rectangular Ring Seal	1	
☐	2	139988	Rectangular Ring Seal	1	
☐	3	153336	Fuel Pump Damper Body	1	
☐	4	153338	Fuel Pump Damper Cover	1	
☐	5	160514	Plain Washer	1	1 11/16 in.
☐	6	202897	Fuel Pump Damper Diaphragm	1	
☐	7	3017051	Captive Washer Cap Screw	2	1/4 - 20 X 1 1/8 in.
☐	8	153346	Socket Head Cap Screw	2	1/4 - 20 X 4 in.
☐	9	70704	Plain Washer	2	1/4 in.
☐	10	151900	Rectangular Ring Seal	1	
☐	11	181466	Lock Washer	2	1/4 in.

Parts Catalog - Option Detail

Electronic Parts Catalog - Option Detail				
Option	**Group**	**Graphic**	**Film Card**	**Date**
FP6771	05.01.2	null	K50	08-SEP-93
Engines	G50, K50, K50-DPM, QSK50 CM2150 K107, QSK50 CM2150 MCRS, QSK50 CM2350 K108, QSK50 CM850 MCRS, QSK50 DF CM850/CM2150 MCRS			

Cart	Ref No	Part Number	Part Description	Required	Remarks
View My Cart					
		FP6771	Fuel Pump Front Cover		
☐		3030267	Fuel Pump Front Cover	1	
☐		3030267	Fuel Pump Front Cover	1	
☐		146160	Plain Washer	1	5/16 in.
☐		163944	Bushing	1	
☐		212602	Tachometer Drive Gear	1	
☐		212603	Oil Seal	1	
☐		212613	Jaw Coupling Hub	1	
☐		212668	Square Key	1	
☐		3002110	Male Connector	1	
☐		3004724	Seal Spacer	1	
☐		3015665	Tachometer Drive Shaft	1	
☐		212607	Tachometer Drive Shaft	1	
☐		212609	Tachometer Drive Bushing	1	
☐		212610	Tachometer Drive Gear	1	
☐		3028372	Main Drive Assembly	1	
☐		S 16052	Ball Bearing	1	
☐		212601	Fuel Pump Drive Shaft	1	
☐		212604	Retaining Ring	1	
☐		212605	Fuel Pump Gear	1	
☐		212639	Spline Adapter	1	
		3081372	Fuel Pump Cover	1	
☐		3062676	Oil Seal	1	
		3075523	Oil Seal	1	
		3075524	Fuel Pump Cover	1	
		3069103	Fuel Pump Gasket	1	

		3018682	Hexagon Head Cap Screw	1	1/4 - 20 X 1 Inch.
		70704	Plain Washer	3	1/4 in.
		3017051	Captive Washer Cap Screw	5	1/4 - 20 X 1 1/8 in.
		118226	Socket Head Cap Screw	1	#10 - 24 x 1 1/4 in.
		S 606	Lock Washer	1	#12.
		103089	Plain Washer	1	1/8 in.
		3063052	Fuel Pump Gasket	1	
		3017052	Captive Washer Cap Screw	2	1/4 - 20 x 1 1/8 in.
		3002110	Male Connector	1	
		212603	Oil Seal	1	
		3015665	Tachometer Drive Shaft	1	
		212607	Tachometer Drive Shaft	1	
		212609	Tachometer Drive Bushing	1	
		212610	Tachometer Drive Gear	1	
		212602	Tachometer Drive Gear	1	
		3803615	Seal Kit	A/R	
		3075523	Oil Seal	1	

© 2017 Cummins Inc., Box 3005, Columbus, IN 47202-3005 U.S.A.
Terms of Use and Disclaimers | Recommended System Requirements
Need Assistance? Please click on the Contact Us button in the top right corner of any page.

Parts Catalog - Option Detail

Electronic Parts Catalog - Option Detail				
Option	**Group**	**Graphic**	**Film Card**	**Date**
FP6771	05.01.1	fp600gd	K50	08-SEP-93
Engines	G50, K50, K50-DPM, QSK50 CM2150 K107, QSK50 CM2150 MCRS, QSK50 CM2350 K108, QSK50 CM850 MCRS, QSK50 DF CM850/CM2150 MCRS			

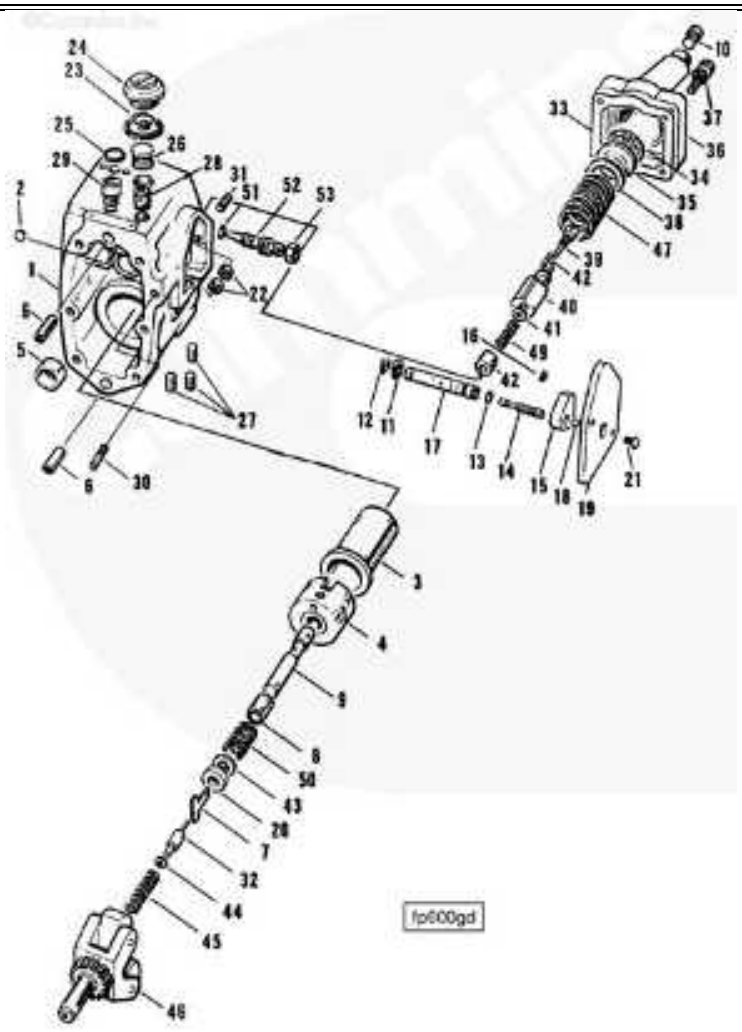

SMALL | MEDIUM | LARGE

Cart	Ref No	Part Number	Part Description	Required	Remarks
View My Cart					
		FP6771	Fuel Pump Housing		
☐		3279620	Fuel Pump Housing	1	
	1	3279691	Fuel Pump Body	1	
☐	2	214139	Ball Plug	3	
☐	3	3036970	Spring Pack Housing	1	
☐	4	3058559	Governor Barrel	1	

	5	100193	Tachometer Drive Bushing	1	
	6	118227	Ring Dowel	2	
		3010810	Governor Plunger	1	
	7	70690	Governor Plunger Driver	1	
	8	3048557	Bearing Spacer	1	
	9	3009380	Governor Plunger	1	
	10	3025459	Pipe Plug	3	
	11	100478	O-Ring Seal	1	
	12	163945	Retaining Ring	1	
	13	213768	O-Ring Seal	1	
	14	3006175	Fuel Pump Adjusting Screw	1	
		3006440	Throttle Shaft	1	
	15	3006343	Throttle Lever Stop	1	
	16	3006344	Socket Set Screw	2	
	17	3046690	Throttle Shaft	1	
	18	213769	Ball Plug	1	
	19	3000446	Fuel Control Cover	1	
	20	3027633	Thrust Bearing	1	
	21	S 2286	Drive Screw	4	3/16 in.
	22	S 270	Regular Hexagon Nut	2	1/4 - 28 UNF.
	23	70700	Compression Spring	1	
	24	157088	Fuel Pump Filter Cap	1	
	25	154088	Rectangular Ring Seal	1	
	26	146483	Filter Screen	1	
	27	3025460	Pipe Plug	4	1/8 NPT.
	28	195265	Pipe Plug	1	1/4 NPT.
	30	3046407	Socket Set Screw	2	
	31	110058	Fuel Pump Adjusting Nut	1	1/4 - 28 UNF.
	32	144178	Governor Weight Assist Plunger	1	
	33	70705	Flange Gasket	1	
	34	S 16240	Retaining Ring	2	
	35	70713	Spring Retainer	1	
	36	44678	Spring Pack Cover	1	
	37	3017051	Captive Washer Cap Screw	2	1/4 - 20 X 1 1/8 in.
	38	70717	Fuel Pump Governor Shim	6	
	38	70717 A	Fuel Pump Governor Shim	1	
	38	70717 B	Fuel Pump Governor Shim	1	

	39	70716	Knurled Screw	1	
	40	3036473	Idle Spring Plunger Guide	1	
	41	70715	Plain Washer	1	1/8 Inch.
	42	211635	Governor Weight Pin	2	
	43	101841	Shim	A/R	.005 in.
	43	101842	Shim	A/R	.010 in.
	43	101843	Shim	A/R	.020 in.
	44	144179	Shim	7	
	45	143854	Compression Spring	1	
	46	3024991	Governor Weight Carrier	1	Recon equivalent 3024991 RX
	47	3004957	Spring , Governor . Max .	1	
	48	141629	Idle Spring Plunger	1	
	49	3032014	Compression Spring	1	
	50	3018767	Compression Spring	1	
	51	68061 A	O-Ring Seal	1	

© 2017 Cummins Inc., Box 3005, Columbus, IN 47202-3005 U.S.A.
Terms of Use and Disclaimers | Recommended System Requirements
Need Assistance? Please click on the Contact Us button in the top right corner of any page.

Parts Catalog - Option Detail

Electronic Parts Catalog - Option Detail				
Option	**Group**	**Graphic**	**Film Card**	**Date**
FP6180-01	05.03	null	K50	21-JUN-08
Engines	G50, K50, K50-DPM, QSK50 CM2150 K107, QSK50 CM2150 MCRS, QSK50 CM2350 K108, QSK50 CM850 MCRS, QSK50 DF CM850/CM2150 MCRS			

Cart	Ref No	Part Number	Part Description	Required	Remarks
View My Cart					
		FP6180-01	Fuel Pump Mounting		Cummins EFC governor system....(More)
					Includes:
					* Normally closed actuator
					mounted in fuel pump AFC
					cavity
					* AFC style PTG/AUTO fuel
					pump
					Requires: 24volt, Insulated
					Or Negative ground power
					supply.
					For Use With:
					* Customer supplied governor
					Control module and magnetic
					pick-up. KCL to use
					accessory drive gear part
					number 4952020 in place of
					part number 4953332.
		MP5288	Accessory Mounting Drive	1	
☐		3003156	Wire Seal	2	
☐		3022725	Fuel Pump Support	1	
		3175550	Protective Cover	1	
		3176080	Fuel Pump Mounting	1	
☐		3379231	Governor Bulletin	1	

© 2017 Cummins Inc., Box 3005, Columbus, IN 47202-3005 U.S.A.
Terms of Use and Disclaimers | Recommended System Requirements
Need Assistance? Please click on the Contact Us button in the top right corner of any page.

Parts Catalog - Option Detail

Electronic Parts Catalog - Option Detail				
Option	**Group**	**Graphic**	**Film Card**	**Date**
FR6243	99.01	null	K50	09-JUL-17
Engines	G50, K50, K50-DPM, QSK50 CM2150 K107, QSK50 CM2150 MCRS, QSK50 CM2350 K108, QSK50 CM850 MCRS, QSK50 DF CM850/CM2150 MCRS			

Cart	Ref No	Part Number	Part Description	Required	Remarks
View My Cart					
		FR6243	Fuel Rating		1915 BHP at 1500 RPM...(More)
					For stand-by duty application
					CPL: 2354.

© 2017 Cummins Inc., Box 3005, Columbus, IN 47202-3005 U.S.A.
Terms of Use and Disclaimers | Recommended System Requirements
Need Assistance? Please click on the Contact Us button in the top right corner of any page.

Parts Catalog - Option Detail

Electronic Parts Catalog - Option Detail				
Option	**Group**	**Graphic**	**Film Card**	**Date**
FT60072-05	06.03	ft610gn	K50	10-OCT-14
Engines	G50, K50, K50-DPM, QSK50 CM2150 K107, QSK50 CM2150 MCRS, QSK50 CM2350 K108, QSK50 CM850 MCRS, QSK50 DF CM850/CM2150 MCRS			

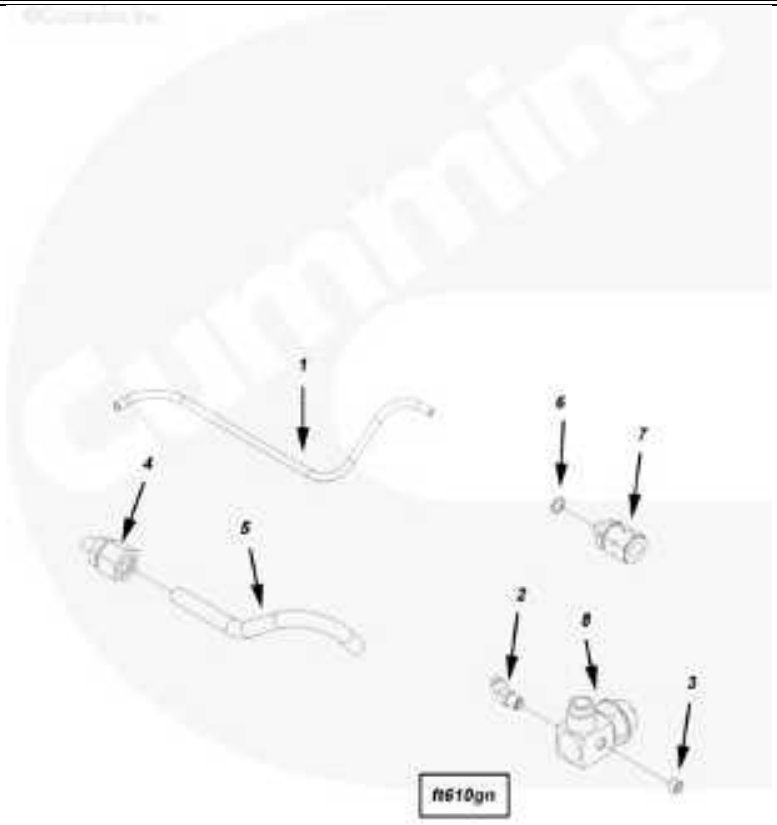

SMALL | MEDIUM | LARGE

Cart	Ref No	Part Number	Part Description	Required	Remarks
View My Cart					
		FT60072-05	Fuel Supply Plumbing		Fuel supply plumbing...(More)
					Engine Model: K38/ K50
					aftercooler type: Top
					box/outboard/LTA
					Pump Type: AUTO Governor:
					EFC Governor fuel block:
					Standard fuel filter block:

					Pump mounted. Compressor
					type: Less compressor
					AFC: No skinner valve: No.
	1	AS401440S S		1	
	2	S 1047 A	Male Adapter Elbow	1	1/8 NPTF x 7/16-20 (45)
	3	3628604	Pipe Plug	1	1/8 - 27 X 0.3 in.
	4	3629437	Tube Connector	1	
	5	3630792	Fuel Supply Tube	1	
		3630840	Tube Connector	1	
	6	3037236	O-Ring Seal	1	Ref. SPT 97T10
	7	3630841	Tube Connector	1	
		3632151		1	
	8	4345902	Male Adapter Elbow	1	

© 2017 Cummins Inc., Box 3005, Columbus, IN 47202-3005 U.S.A.
Terms of Use and Disclaimers | Recommended System Requirements
Need Assistance? Please click on the Contact Us button in the top right corner of any page.

Parts Catalog - Option Detail

Electronic Parts Catalog - Option Detail				
Option	**Group**	**Graphic**	**Film Card**	**Date**
FV6020-01	05.06	fv601gu	K50	25-JUN-98
Engines	G50, K50, K50-DPM, QSK50 CM2150 K107, QSK50 CM2150 MCRS, QSK50 CM2350 K108, QSK50 CM850 MCRS, QSK50 DF CM850/CM2150 MCRS			

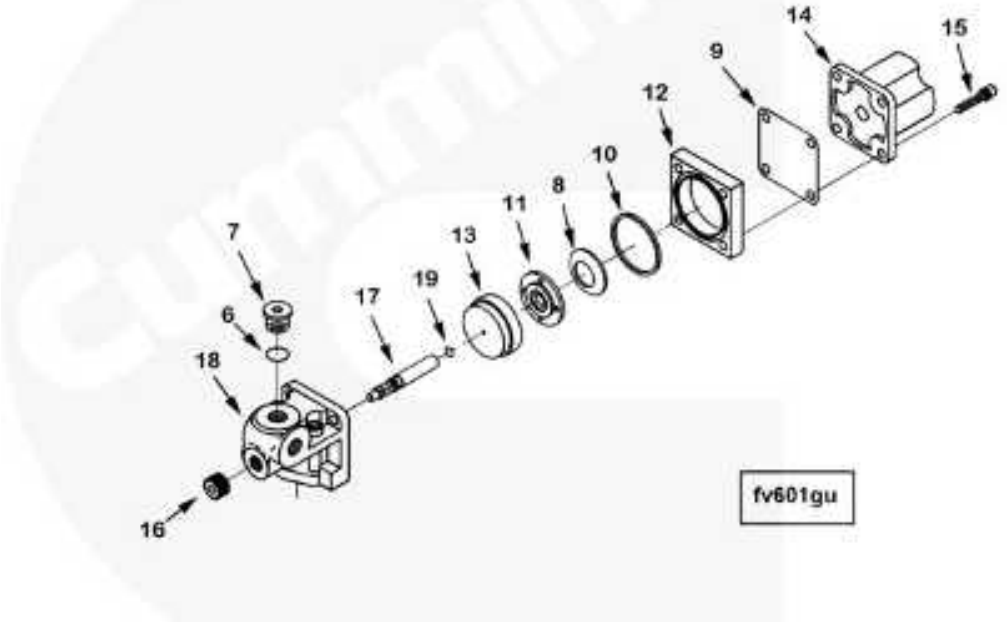

SMALL | MEDIUM | LARGE

Cart	Ref No	Part Number	Part Description	Required	Remarks
View My Cart					
		FV6020-01	Fuel Valve		Fuel shutoff valve...(More)
					for use with remote mounted
					rapid restart fuel filter
					screen. 24volt DC heavy duty
					1 terminal internal ground.
					2 port 1/2 inch straight
					thread o-ring. Manual
					overide.
					For use with centry fuel
					pumps.
					When used on PTG fuel pump
					with top mounted mvs gov omit
					2 s189 c capscrews add 2

					100129 capscrews.
		3096857	Shut-Off Valve	1	
		3067424	Threaded Plug	1	1/2 - 20 UNF.
	6	3037236	O-Ring Seal	1	Ref. SPT 97T10
	7	3067347	Threaded Plug	1	1/2-20 Thd
		3096856	Fuel Shut-Off Valve	1	
	8	129768	Valve Spring	1	
	9	129839	Shut-Off Valve Shield	1	
	10	129888	Rectangular Ring Seal	2	
	11	196057	Valve Disc	1	
	12	3034451	Actuator Housing	1	
	13	3034452	Actuator Disc	1	
	14	3054609	Solenoid	1	
	15	3065944	Captive Washer Cap Screw	4	#10 - 24 X 1 Inch.
		3073890	Fuel Shut-Off Valve Body	1	
	16	129838	Knob	1	
	17	3013036	Shut-Off Valve Shaft	1	
	18	3073891	Shut-Off Valve Body	1	
	19	3279794	O-Ring Seal	1	
		4024809	Fuel Solenoid Kit	1	
		129888	Rectangular Ring Seal	1	
		3054609	Solenoid	1	

© 2017 Cummins Inc., Box 3005, Columbus, IN 47202-3005 U.S.A.
Terms of Use and Disclaimers | Recommended System Requirements
Need Assistance? Please click on the Contact Us button in the top right corner of any page.

Parts Catalog - Option Detail

Electronic Parts Catalog - Option Detail				
Option	**Group**	**Graphic**	**Film Card**	**Date**
FV6707-03	05.06	fv601gj	K50	11-OCT-99
Engines	G50, K50, K50-DPM, QSK50 CM2150 K107, QSK50 CM2150 MCRS, QSK50 CM2350 K108, QSK50 CM850 MCRS, QSK50 DF CM850/CM2150 MCRS			

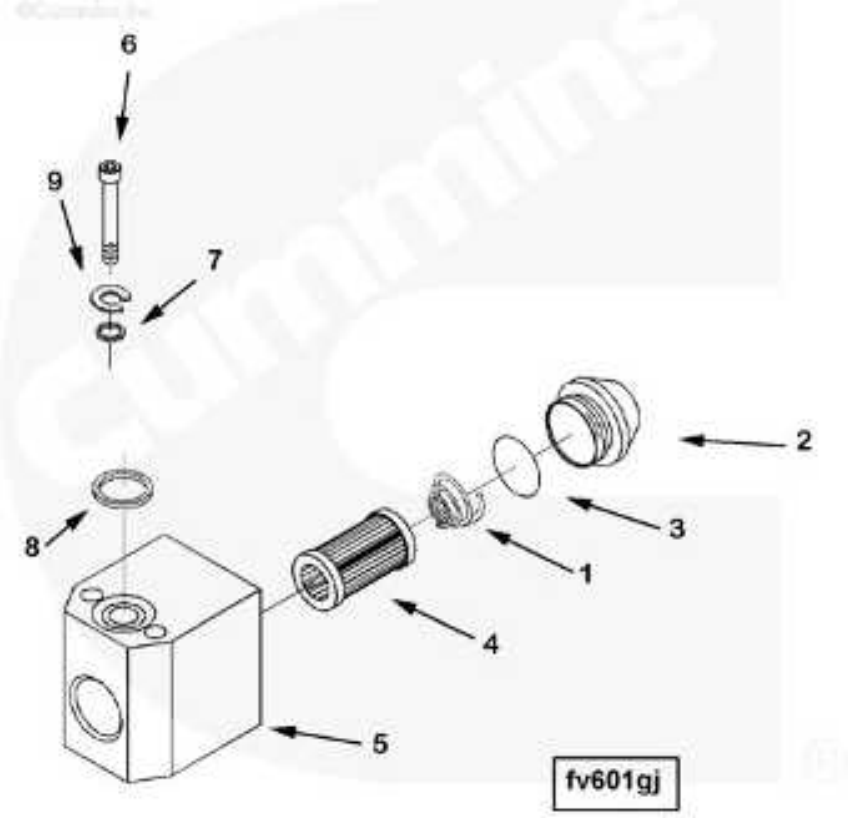

SMALL | MEDIUM | LARGE

Cart	Ref No	Part Number	Part Description	Required	Remarks
View My Cart					
		FV6707-03	Fuel Valve Mounting		Fuel Valve Mounting...(More)
					Fuel Pump Type: AUTO fuel
					filter block: Pump mounted
					straight thread o ring: Yes.
☐		3096078	Fuel Filter	1	
☐	1	70700	Compression Spring	1	
☐	2	3014575	Fuel Pump Filter Cap	1	
☐	3	3021123	O-Ring Seal	1	
☐	4	3090769	Filter Screen	1	
☐	5	3090770	Filter Housing	1	

	6	S 189 C	Socket Head Cap Screw	4	1/4 - 20 X 1 3/4 Inch.
	7	67684	Plain Washer	4	1/4 Inch.
	8	154087	Rectangular Ring Seal	2	
	9	181466	Lock Washer	4	1/4 in.

© 2017 Cummins Inc., Box 3005, Columbus, IN 47202-3005 U.S.A.
Terms of Use and Disclaimers | Recommended System Requirements
Need Assistance? Please click on the Contact Us button in the top right corner of any page.

Parts Catalog - Option Detail

Electronic Parts Catalog - Option Detail				
Option	**Group**	**Graphic**	**Film Card**	**Date**
3804300	17.02	null	K50	30-SEP-89
Engines	G50, K50, K50-DPM, QSK50 CM2150 K107, QSK50 CM2150 MCRS, QSK50 CM2350 K108, QSK50 CM850 MCRS, QSK50 DF CM850/CM2150 MCRS			

Cart	Ref No	Part Number	Part Description	Required	Remarks
View My Cart					
☐		3804300	Kit, Lower Engine Gasket	1	
☐		S 1003 A	Grommet Seal	4	
☐		43696 A	O-Ring Seal	2	
☐		67946	Plain Washer	4	1 1/32 in.
☐		68908	Lock Plate	14	
☐		70415	O-Ring Seal	2	
☐		108172	O-Ring Seal	1	
☐		145507	O-Ring Seal	2	
☐		145528	O-Ring Seal	2	
☐		145529	O-Ring Seal	1	
☐		145530	O-Ring Seal	1	
☐		145550	O-Ring Seal	2	
☐		145581	O-Ring Seal	1	
☐		145586	O-Ring Seal	1	
☐		145600	O-Ring Seal	1	
☐		145613	O-Ring Seal	1	
☐		151355	Lock Plate	2	
☐		205571	Oil Slinger Gasket	1	
☐		206193	Water Pump Gasket	1	
☐		206407	Hand Hole Gasket	1	
☐		206416	Support Gasket	1	
☐		206421	Gear Housing Gasket	1	
☐		206455	Water Pump Gasket	1	
☐		206457	O-Ring Seal	1	
☐		207551	O-Ring Seal	1	
☐		212161	O-Ring Seal	16	
☐		3007441	O-Ring Seal	16	

☐		3000632	Connection Gasket	1	
☐		3005939	Cover Plate Gasket	1	
☐		3005940	Gear Housing Gasket	1	
☐		3007512	O-Ring Seal	1	
☐		3008921	Relief Valve Body Gasket	1	
☐		3009323	Water Header Cover Gasket	1	
☐		3009324	Water Header Cover Gasket	4	
☐		3014449	Flange Gasket	1	
☐		3016792	Oil Seal	1	
☐		3026391	Rectangular Ring Seal	1	
☐		3026392	Rectangular Ring Seal	2	
☐		3031544	Rectangular Ring Seal	1	
☐		3040721	Cam Follower Housing Gasket	16	
☐		3040722	Camshaft Cover Gasket	2	
☐		3043211	Oil Pan Gasket	4	
☐		3043213	Oil Pan Gasket	1	
☐		3046852	Accessory Drive Support Gasket	1	
☐		3069102	Air Compressor Gasket	1	
☐		4026171	Fuel Pump Gasket	1	
☐		3160924	Dust Seal	1	
☐		3175032	Crankcase Breather Gasket	2	
☐		3175856	Hand Hole Gasket	8	
☐		3177108	Filter Head Gasket	2	
☐		3177160	Gear Cover Gasket	1	
☐		3178076	Gear Housing Gasket	1	
☐		3179035	Water Transfer Connection Gasket	1	
☐		3200287	Keyway Seal	2	
☐		3201125	O-Ring Seal	2	
☐		3331663	Dust Seal	1	
☐		3628894	Dust Seal	1	
☐		3628895	Oil Seal	1	
☐		3628973	Cover Plate Gasket	1	
☐		3629141	Lubricating Oil Filter Cover Gasket	1	

© 2017 Cummins Inc., Box 3005, Columbus, IN 47202-3005 U.S.A.
Terms of Use and Disclaimers | Recommended System Requirements
Need Assistance? Please click on the Contact Us button in the top right corner of any page.

Parts Catalog - Option Detail

Electronic Parts Catalog - Option Detail				
Option	**Group**	**Graphic**	**Film Card**	**Date**
4352579	17.02	null	K50	08-APR-14
Engines	G50, K50, K50-DPM, QSK50 CM2150 K107, QSK50 CM2150 MCRS, QSK50 CM2350 K108, QSK50 CM850 MCRS, QSK50 DF CM850/CM2150 MCRS			

Cart	Ref No	Part Number	Part Description	Required	Remarks
View My Cart					
☐		4352579	Kit, Single Head Gasket	1	
☐		100478	O-Ring Seal	12	
☐		131026	O-Ring Seal	12	
☐		206277	Intake Manifold Gasket	6	
☐		206279	Connection Gasket	1	
☐		206446	Water Transfer Connection Gasket	1	
☐		206576	Turbocharger Gasket	1	
☐		207038	O-Ring Seal	1	
☐		207244	Injector Seal	1	
☐		3001340	O-Ring Seal	12	
☐		3023066	O-Ring Seal	4	
☐		3026421	O-Ring Seal	2	
☐		3028291	O-Ring Seal	5	
☐		3037821	Exhaust Manifold Gasket	6	
☐		3084539	O-Ring Seal	12	
		3170927		3	
☐		3630839	Rocker Lever Housing Gasket	1	
☐		3818885	O-Ring Seal	2	
☐		4334080	Cylinder Head Gasket	1	
☐		4920076	Rocker Lever Cover Gasket	1	

© 2017 Cummins Inc., Box 3005, Columbus, IN 47202-3005 U.S.A.
Terms of Use and Disclaimers | Recommended System Requirements
Need Assistance? Please click on the Contact Us button in the top right corner of any page.

Parts Catalog - Option Detail

Electronic Parts Catalog - Option Detail				
Option	**Group**	**Graphic**	**Film Card**	**Date**
FA6703-01	01.06	fa601gi	K50	19-SEP-96
Engines	G50, K50, K50-DPM, QSK50 CM2150 K107, QSK50 CM2150 MCRS, QSK50 CM2350 K108, QSK50 CM850 MCRS, QSK50 DF CM850/CM2150 MCRS			

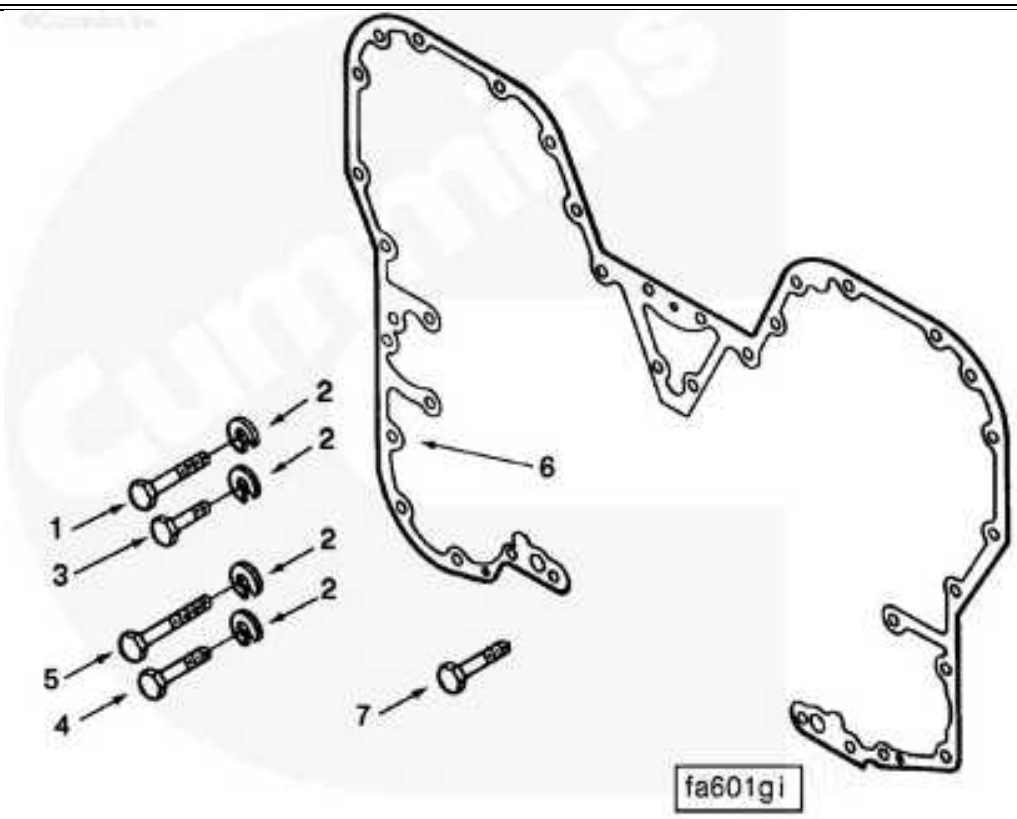

SMALL | MEDIUM | LARGE

Cart	Ref No	Part Number	Part Description	Required	Remarks
View My Cart					
		FA6703-01	Gear Cover And Housing		Gear cover mounting for use...(More)
					with alternator, less freon
					compressor. Use only with
					gear cover less cam cover
					openings.
☐	1	S 127	Hexagon Head Cap Screw	2	7/16 - 14 X 3 3/4 in.
☐	2	S 610	Lock Washer	22	7/16 in.
☐	3	102020	Hexagon Head Cap Screw	7	7/16 - 14 X 2 1/4 in.
☐	4	108767	Hexagon Head Cap Screw	5	7/16 - 14 X 3 1/2 in.
☐	5	110266	Hexagon Head Cap Screw	6	7/16 - 14 X 4 in.
☐	6	3177160	Gear Cover Gasket	1	

☐	7	3069026	Socket Head Cap Screw	2	7/16 - 14 X 3 1/2 in.

© 2017 Cummins Inc., Box 3005, Columbus, IN 47202-3005 U.S.A.
Terms of Use and Disclaimers | Recommended System Requirements
Need Assistance? Please click on the Contact Us button in the top right corner of any page.

Parts Catalog - Option Detail

Electronic Parts Catalog - Option Detail				
Option	**Group**	**Graphic**	**Film Card**	**Date**
OB6723-03	07.02	ob606gh	K50	07-JUL-03
Engines	G50, K50, K50-DPM, QSK50 CM2150 K107, QSK50 CM2150 MCRS, QSK50 CM2350 K108, QSK50 CM850 MCRS, QSK50 DF CM850/CM2150 MCRS			

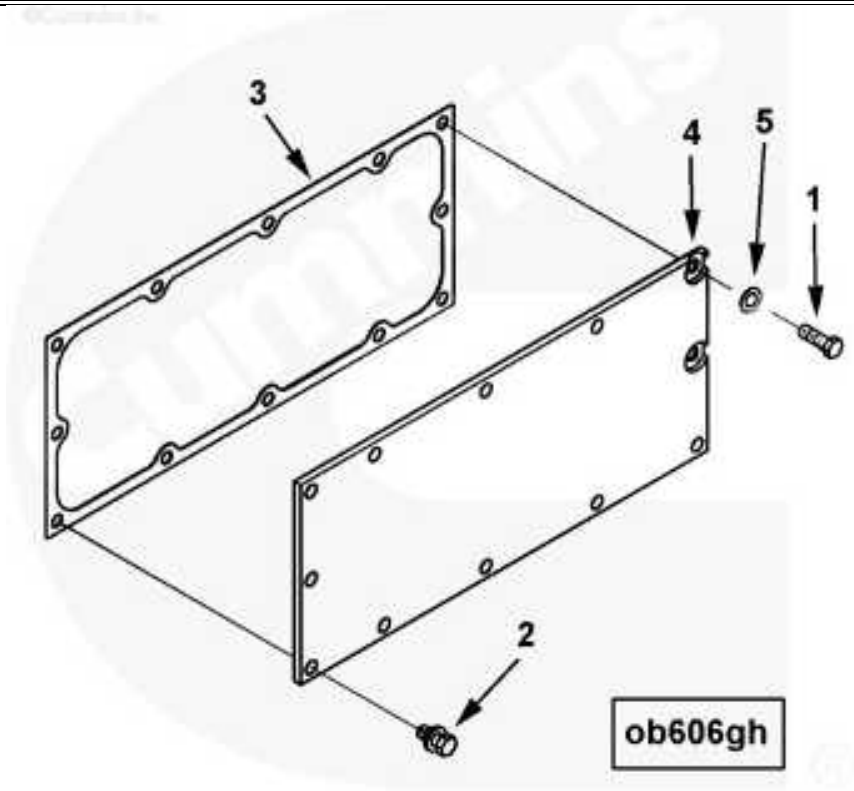

SMALL | MEDIUM | LARGE

Cart	Ref No	Part Number	Part Description	Required	Remarks
View My Cart					
		OB6723-03	Hand Hole Cover		Hand hole cover for use when...(More)
					crankcase explosion valve is
					not required.
					When used behind bypass
					filter omit 2 S-606-A
					lockwashers and 2 205354
					capscrew.
☐	1	S 109	Hexagon Head Cap Screw	2	3/8 - 16 x 7/8 in.
☐	2	3014766	Captive Washer Cap Screw	10	3/8 - 16 x 1 3/64 in.
☐	3	3175856	Hand Hole Gasket	1	
☐	4	3628229	Hand Hole Cover	1	

	5	3628902	Plain Washer	2	

© 2017 Cummins Inc., Box 3005, Columbus, IN 47202-3005 U.S.A.
Terms of Use and Disclaimers | Recommended System Requirements
Need Assistance? Please click on the Contact Us button in the top right corner of any page.

Parts Catalog - Option Detail

Electronic Parts Catalog - Option Detail				
Option	**Group**	**Graphic**	**Film Card**	**Date**
PP2354-04	06.01	pp613gq	K50	08-AUG-14
Engines	G50, K50, K50-DPM, QSK50 CM2150 K107, QSK50 CM2150 MCRS, QSK50 CM2350 K108, QSK50 CM850 MCRS, QSK50 DF CM850/CM2150 MCRS			

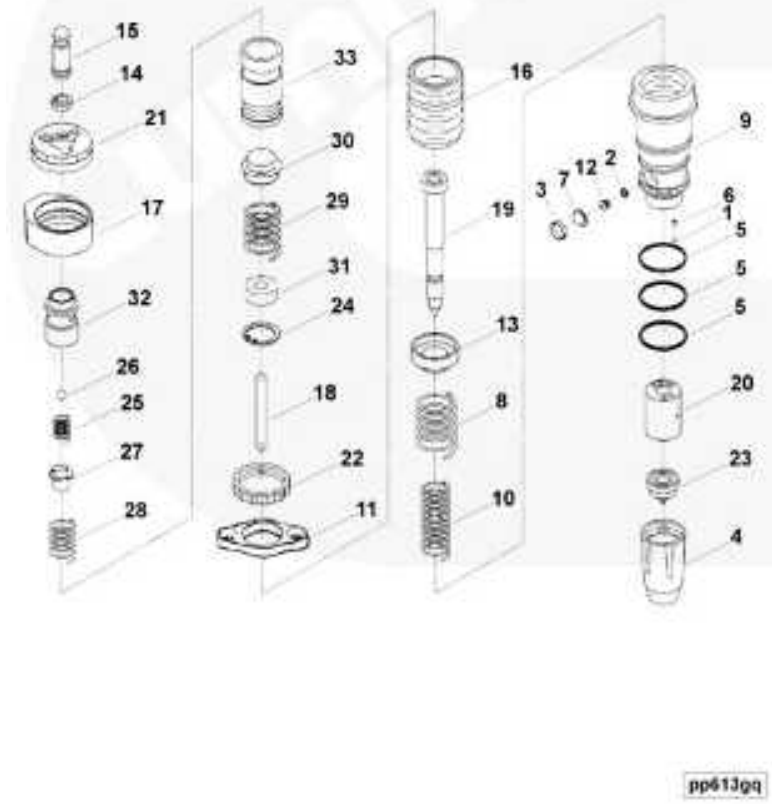

SMALL | MEDIUM | LARGE

Cart	Ref No	Part Number	Part Description	Required	Remarks
View My Cart					
		PP2354-04	Injector		Injector...(More)
					Certified Model Name:
					KTA50-G8
					CPL: 2354
					Certified By: None
					Engine Aspiration:
					Turbocharger

					Application: Power Generation
					Power Rating: Intermittent
					KTA-50G8 With LTA K-2000
					Technology.
					Less Water Pumps.
					Includes:
					Reduced Drain Flow Injectors.
					For Standby, Prime and
					Continuous Applications.
		3349860	Injector	16	
	1	167157	Check Ball	1	
	2	173086	Injector Gasket	1	
	3	174299	Screen Retainer	1	
	4	3042430	Injector Cup Retainer	1	
	5	193736	O-Ring Seal	3	Orange
	6	203426	Roll Pin	2	
	7	3054999	Filter Screen	1	
	8	3042427	Injector Spring	1	
	9	4307427	Injector Adapter	1	
	10	3042428	Injector Spring	1	
	11	3411695	Injector Clamp	1	
	12	3045047	Injector Orifice Plug	1	
	13	3052218	Injector Spring Retainer	1	
	14	3052231	Injector Link Retainer	1	
	15	3052233	Injector Plunger Link	1	
	16	3279821	Injector Stop Screw	1	
	17	3279850	Tappet Top Stop Lock Nut	1	
	18	3627894	Injector Plunger Link	1	
		3076126	Barrel And Plunger	1	
	19	3076124	Injector Plunger	1	
	20	3053504	Injector Barrel	1	
	21	3068859	Tappet Top Stop Cap	1	
	22	3068860	Lock Nut	1	1 5/16 - 18 UNF.
	23	3609841	Injector Cup	1	
		3075381	Hydraulic Variable Timing Tappet	1	
	24	3027988	Retaining Ring	1	
	25	3027994	Compression Spring	1	

	26	3027996	Check Ball	1	
☐	27	3076033	Ball Guide	1	
☐	28	3054852	Injector Spring	1	
	29	4077027	Injector Spring	1	
	30	3085344	Ball Guide	1	
	31	3085345	Tappet Socket	1	
		3075391	Sleeve And Plunger	1	
	32	3053772	Tappet Plunger	1	
	33	3075386	Tappet Sleeve	1	

© 2017 Cummins Inc., Box 3005, Columbus, IN 47202-3005 U.S.A.
Terms of Use and Disclaimers | Recommended System Requirements
Need Assistance? Please click on the Contact Us button in the top right corner of any page.

Parts Catalog - Option Detail

Electronic Parts Catalog - Option Detail				
Option	**Group**	**Graphic**	**Film Card**	**Date**
BP6126-02	06.01.5	null	K50	15-JUL-10
Engines	G50, K50, K50-DPM, QSK50 CM2150 K107, QSK50 CM2150 MCRS, QSK50 CM2350 K108, QSK50 CM850 MCRS, QSK50 DF CM850/CM2150 MCRS			

Cart	Ref No	Part Number	Part Description	Required	Remarks
View My Cart					
		BP6126-02	Injector Mounting		Injector Mounting...(More)
					Fuel Control System: Dual STC
					(Stepped Timing Control)
					Water Pump Included: Yes
		2893881	Mounting Injector	16	
☐		131026	O-Ring Seal	1	
☐		207244	Injector Seal	1	
☐		2885618	Oil Transfer Connection	1	
☐		3023095	Sealing Washer	2	
☐		3070962	Hexagon Head Cap Screw	2	
☐		3179021	Banjo Connector Screw	1	

© 2017 Cummins Inc., Box 3005, Columbus, IN 47202-3005 U.S.A.
Terms of Use and Disclaimers | Recommended System Requirements
Need Assistance? Please click on the Contact Us button in the top right corner of any page.

Parts Catalog - Option Detail

Electronic Parts Catalog - Option Detail				
Option	**Group**	**Graphic**	**Film Card**	**Date**
IM6021-04	10.01	at601gk	K50	09-AUG-04
Engines	G50, K50, K50-DPM, QSK50 CM2150 K107, QSK50 CM2150 MCRS, QSK50 CM2350 K108, QSK50 CM850 MCRS, QSK50 DF CM850/CM2150 MCRS			

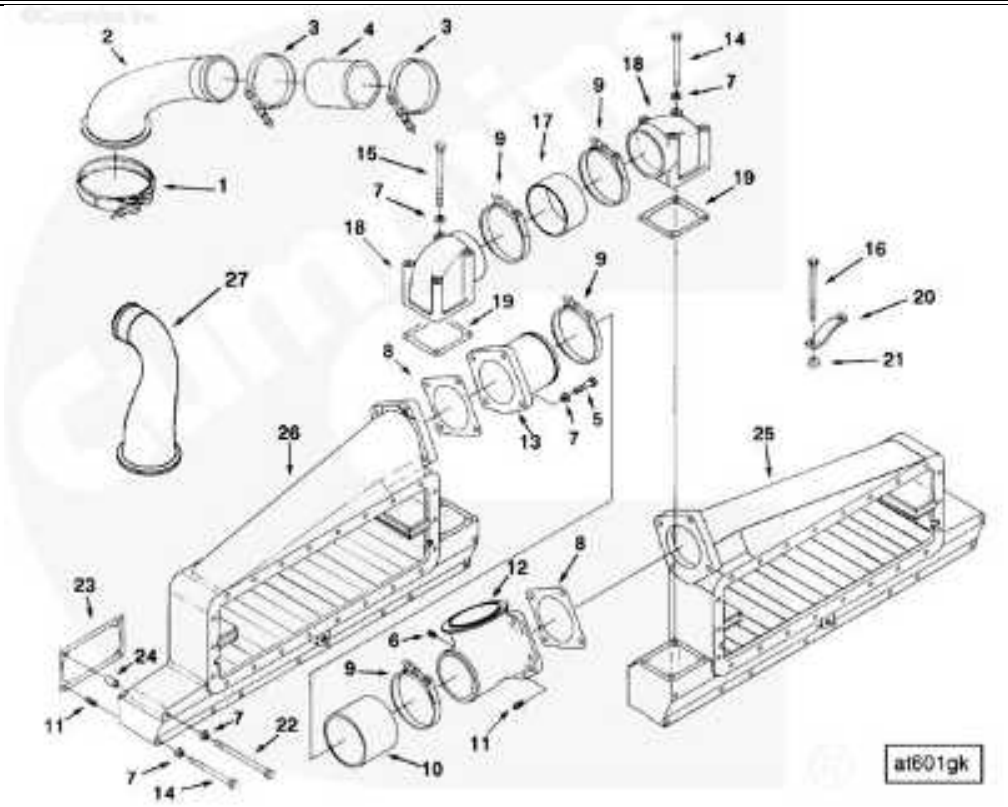

SMALL | MEDIUM | LARGE

Cart	Ref No	Part Number	Part Description	Required	Remarks
View My Cart					
		IM6021-04	Intake Manifold		Air intake manifolds for use...(More)
					with KTA50-G3/G4 single stage
					uprate engines with K-2000
					technology.
☐	1	3633805	V Band Clamp	2	
☐	2	3058809	Air Crossover Connection	1	
	3	3633974	T-Bolt Clamp	4	3.69-3.94 in.
☐	4	3630125	Plain Hose	2	
☐	5	3065723	Captive Washer Cap Screw	16	3/8 - 16 X 1 3/4 in.
☐	6	3628605	Pipe Plug	2	1/4 - 18.
☐	7	3036460	Spring Washer	96	

	8	3047665	Connection Gasket	4	
	9	3633975	T-Bolt Clamp	8	4 3/4 in.
	10	3634116	Hump Hose	2	
		3072040	Air Crossover Connection	2	
	11	67184 B	Threaded Insert	4	
	12	3629545	Air Crossover Connection	2	
	13	3630249	Air Transfer Connection	2	
	14	S 106 C	Hexagon Head Cap Screw	40	3/8 - 16 X 4 3/4 in.
	15	S 166 B	Hexagon Head Cap Screw	8	3/8 - 16 X 5 3/4 Inch.
	16	S 170 A	Hexagon Head Cap Screw	2	3/8 - 16 X 6 Inch.
	17	3049565	Plain Hose	2	
	18	3058814	Air Intake Connection	4	
	19	3179028	Connection Gasket	4	
	20	3626479	Connection Bracket	2	
	21	62279	Mounting Spacer	8	
	22	69028	Hexagon Head Cap Screw	32	
	23	206277	Intake Manifold Gasket	16	
	24	3014304	Rectangular Ring Seal	32	
	25	3627393	Air Intake Manifold	2	
	26	3627392	Air Intake Manifold	2	
	27	3179585	Air Crossover Connection	1	

© 2017 Cummins Inc., Box 3005, Columbus, IN 47202-3005 U.S.A.
Terms of Use and Disclaimers | Recommended System Requirements
Need Assistance? Please click on the Contact Us button in the top right corner of any page.

Parts Catalog - Option Detail

Electronic Parts Catalog - Option Detail				
Option	**Group**	**Graphic**	**Film Card**	**Date**
PP2354-06	06.03	null	K50	08-AUG-14
Engines	G50, K50, K50-DPM, QSK50 CM2150 K107, QSK50 CM2150 MCRS, QSK50 CM2350 K108, QSK50 CM850 MCRS, QSK50 DF CM850/CM2150 MCRS			

Cart	Ref No	Part Number	Part Description	Required	Remarks
View My Cart					
		PP2354-06			LB Oil Control Connection...(More)
					Certified Model Name:
					KTA50-G8
					CPL: 2354
					Certified By: None
					Engine Aspiration:
					Turbocharger
					Application: Power Generation
					Power Rating: Intermittent
					KTA-50G8 With LTA K-2000
					Technology.
					Less Water Pumps.
					For Standby, Prime and
					Continuous Applicaitons.
		3631368	Connection , Left Bank Oil Control	1	
☐		3037662	Male Union Elbow	2	
		3630525	Check Valve	1	
☐		178079	Check Valve	1	
☐		3046201	O-Ring Seal	1	
		3063019	Male Connector	1	
☐		3630736	Male Union Elbow	1	
☐		3046201	O-Ring Seal	1	
		3630737	Male Adapter Elbow	1	
☐		3630740	O-Ring Seal	1	
☐		3634701	Male Adapter Elbow	1	
☐		3630740	O-Ring Seal	1	
		3634700	Male Adapter Elbow	1	

		3631668	Connection , Left Bank Fuel Block	1	
		AS 4054 40SL		1	
		AS 4056 40SL		1	
		3178520	Clip	6	
		3647528	Male Connector	1	

© 2017 Cummins Inc., Box 3005, Columbus, IN 47202-3005 U.S.A.
Terms of Use and Disclaimers | Recommended System Requirements
Need Assistance? Please click on the Contact Us button in the top right corner of any page.

Parts Catalog - Option Detail

Electronic Parts Catalog - Option Detail				
Option	**Group**	**Graphic**	**Film Card**	**Date**
BP6126	17.06	bp603gt	K50	15-JUL-10
Engines	G50, K50, K50-DPM, QSK50 CM2150 K107, QSK50 CM2150 MCRS, QSK50 CM2350 K108, QSK50 CM850 MCRS, QSK50 DF CM850/CM2150 MCRS			

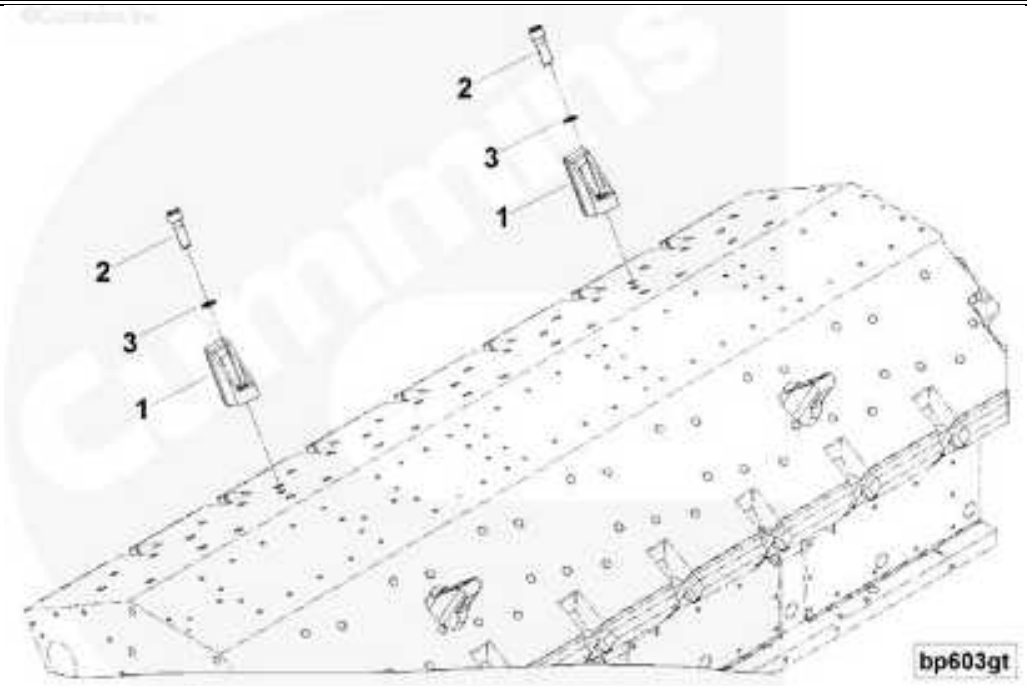

SMALL | MEDIUM | LARGE

Cart	Ref No	Part Number	Part Description	Required	Remarks
View My Cart					
		BP6126	Lifting Bracket		Lifting Bracket...(More)
					Fuel Control System: Dual STC
					(Stepped Timing Control)
					Water Pump Included: Yes
		AR11441	Lifting Bracket	4	
☐	1	205684	Engine Lifting Bracket	1	
☐	2	206028	Socket Head Cap Screw	1	3/4 - 10 X 2 1/4 in.
☐	3	3629962	Plain Washer	1	

© 2017 Cummins Inc., Box 3005, Columbus, IN 47202-3005 U.S.A.
Terms of Use and Disclaimers | Recommended System Requirements
Need Assistance? Please click on the Contact Us button in the top right corner of any page.

Parts Catalog - Option Detail

Electronic Parts Catalog - Option Detail				
Option	**Group**	**Graphic**	**Film Card**	**Date**
BP6126-06	07.05	null	K50	16-OCT-14
Engines	G50, K50, K50-DPM, QSK50 CM2150 K107, QSK50 CM2150 MCRS, QSK50 CM2350 K108, QSK50 CM850 MCRS, QSK50 DF CM850/CM2150 MCRS			

Cart	Ref No	Part Number	Part Description	Required	Remarks
View My Cart					
		BP6126-06	Lubricating Oil Cooler		Lube Oil Cooler...(More)
					Fuel Control System: Dual STC
					(Stepped Timing Control)
					Water Pump Included: Yes
		3635564	Lubricating Oil Cooler	4	
☐		3635563	Lubricating Oil Cooler	1	
☐		212161	O-Ring Seal	4	
☐		3635074	Cooler Core	1	
☐		3645029	Lock Nut	2	

© 2017 Cummins Inc., Box 3005, Columbus, IN 47202-3005 U.S.A.
Terms of Use and Disclaimers | Recommended System Requirements
Need Assistance? Please click on the Contact Us button in the top right corner of any page.

Parts Catalog - Option Detail

Electronic Parts Catalog - Option Detail				
Option	**Group**	**Graphic**	**Film Card**	**Date**
LF6026-06	07.03	lf605gl	K50	09-OCT-12
Engines	G50, K50, K50-DPM, QSK50 CM2150 K107, QSK50 CM2150 MCRS, QSK50 CM2350 K108, QSK50 CM850 MCRS, QSK50 DF CM850/CM2150 MCRS			

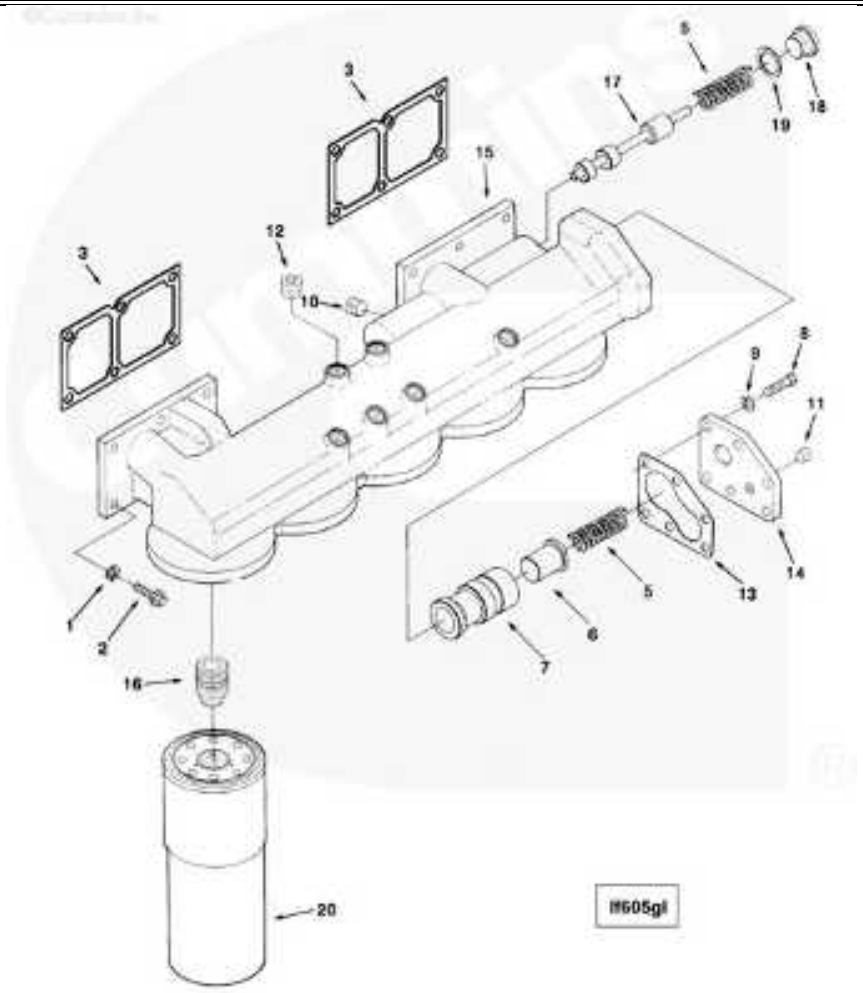

SMALL | MEDIUM | LARGE

Cart	Ref No	Part Number	Part Description	Required	Remarks
View My Cart					
		LF6026-06	Lubricating Oil Filter		Five element lube oil filter...(More)
					with replaceable spin-on
					cartridges mounted on left
					bank (port) side of engine.
☐	1	127362	Plain Washer	12	3/8 in.
☐	2	191772	Twelve Point Cap Screw	12	3/8 - 16 X 1 1/4 in.
☐	3	3629387	Filter Head Gasket	2	
☐	5	205659	Compression Spring	2	

	6	3021618	Pressure Regulator Plunger	1	
	7	3028552	Bypass Valve Body	1	
	8	S 103 D	Hexagon Head Cap Screw	6	3/8 - 16 x 1 1/4 in.
	9	S 604	Lock Washer	6	3/8 in.
	10	S 910 B	Pipe Plug	1	1/4 NPT.
	11	3628604	Pipe Plug	1	1/8 - 27 X 0.3 in.
	12	3628605	Pipe Plug	8	1/4 - 18.
	13	3629141	Lubricating Oil Filter Cover Gasket	1	
	14	3177433	Cover Plate	1	
	15	3629541	Lubricating Oil Filter Head	1	
	16	3627309	Filter Head Adapter	5	
	17	3627927	Pressure Regulator Plunger	1	
		3040818	Threaded Plug	1	1 3/16 - 12 UN
	18	3040819	Threaded Plug	1	
	19	3035228	O-Ring Seal	1	
	20	3310169	Lubricating Oil Filter Element	5	

© 2017 Cummins Inc., Box 3005, Columbus, IN 47202-3005 U.S.A.
Terms of Use and Disclaimers | Recommended System Requirements
Need Assistance? Please click on the Contact Us button in the top right corner of any page.

Parts Catalog - Option Detail

Electronic Parts Catalog - Option Detail				
Option	**Group**	**Graphic**	**Film Card**	**Date**
BP6126-03	07.06	bp603gz	K50	24-JAN-11
Engines	G50, K50, K50-DPM, QSK50 CM2150 K107, QSK50 CM2150 MCRS, QSK50 CM2350 K108, QSK50 CM850 MCRS, QSK50 DF CM850/CM2150 MCRS			

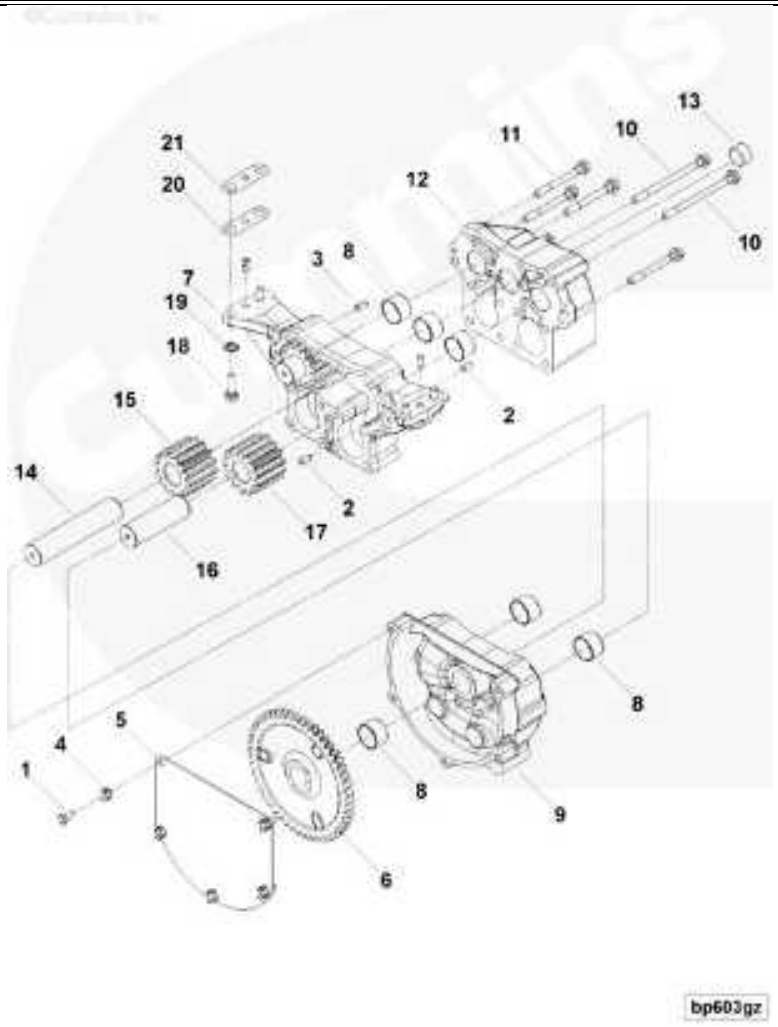

SMALL | MEDIUM | LARGE

Cart	Ref No	Part Number	Part Description	Required	Remarks
View My Cart					
		BP6126-03	Lubricating Oil Pump		Lube Oil Pump...(More)
					Fuel Control System: Dual STC
					(Stepped Timing Control)
					Water Pump Included: Yes
☐		3634643	Lubricating Oil Pump	1	
☐	1	S 117	Hexagon Head Cap Screw	5	3/8 - 16 X 3/4 in.
☐	2	69519	Pin Dowel	3	

	3	107948	Diamond Dowel	3	
	4	109319	Lock Plate	5	
	5	205546	Lubricating Oil Pump Cover	1	
	6	206756	Lubricating Oil Pump Gear	1	
	7	3634642	Lubricating Oil Pump Body	1	
		3025294	Lubricating Oil Pump Cover	1	
	8	205548	Bushing	3	
	9	3025284	Lubricating Oil Pump Cover	1	
	10	3026677	Hexagon Flange Head Cap Screw	2	7/16 - 14 X 6 in.
	11	3026678	Hexagon Flange Head Cap Screw	4	7/16 - 14 X 4 in.
		3175985	Lubricating Oil Pump Cover	1	
		3029415	Lubricating Oil Pump Cover	1	
	8	205548	Bushing	3	
	12	3175984	Lubricating Oil Pump Cover	1	
	13	3628608	Pipe Plug	1	
		3178224	Gear And Shaft	1	
	14	205544	Lubricating Oil Pump Shaft	1	
	15	3178223	Lubricating Oil Pump Gear	1	
		3178225	Gear And Shaft	2	
	16	3000624	Lubricating Oil Pump Shaft	1	
	17	3178223	Lubricating Oil Pump Gear	1	
		3634561	Lubrication Oil Pump Mounting .	1	
	18	S 113	Hexagon Head Cap Screw	4	1/2 - 13 X 1 1/2 in.
	19	S 608	Lock Washer	4	1/2 in.
	20	3026312	Shim	2	
	21	3026313	Shim	2	

© 2017 Cummins Inc., Box 3005, Columbus, IN 47202-3005 U.S.A.
Terms of Use and Disclaimers | Recommended System Requirements
Need Assistance? Please click on the Contact Us button in the top right corner of any page.

Parts Catalog - Option Detail

Electronic Parts Catalog - Option Detail				
Option	**Group**	**Graphic**	**Film Card**	**Date**
OP6710	07.06.1	op603gx	K50	04-JUN-95
Engines	G50, K50, K50-DPM, QSK50 CM2150 K107, QSK50 CM2150 MCRS, QSK50 CM2350 K108, QSK50 CM850 MCRS, QSK50 DF CM850/CM2150 MCRS			

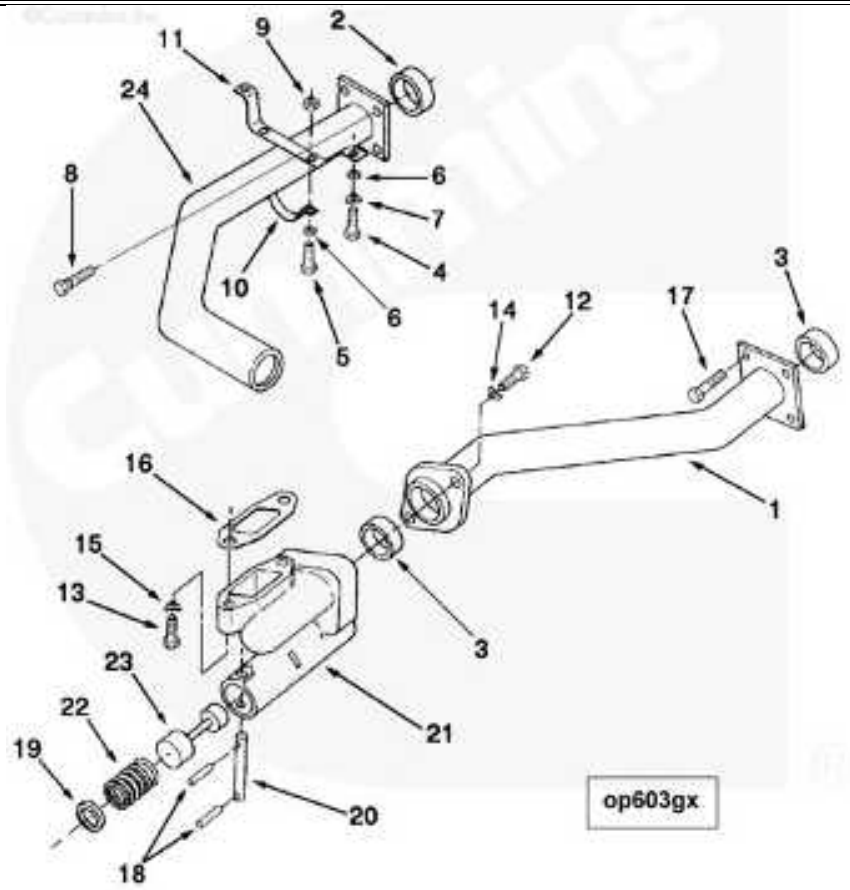

SMALL | MEDIUM | LARGE

Cart	Ref No	Part Number	Part Description	Required	Remarks
View My Cart					
		OP6710	Lubricating Oil Pump		Lube oil pump tubing required...(More)
					for rear center sump oil pan
					with lube oil filter located
					on left bank. Includes
					capscrews in structure for
					use with three gear lube pump
					on K50 only. Adequate for
					ratings up to 1800 RPM only.
☐	1	3025292	Lubricating Oil Supply Tube	1	
☐	2	3026391	Rectangular Ring Seal	1	

	3	3026392	Rectangular Ring Seal	2	
	4	S 103 D	Hexagon Head Cap Screw	2	3/8 - 16 x 1 1/4 in.
	5	S 112	Hexagon Head Cap Screw	2	3/8 - 16 X 1 in.
	6	3628902	Plain Washer	4	
	7	S 604	Lock Washer	2	3/8 in.
	8	3026676	Hexagon Flange Head Cap Screw	4	7/16 - 14 X 7 1/2 Inch.
	9	3175239	Lock Nut	2	3/8 - 16 Inch.
	10	3175584	Tube Clamp	1	
	11	3175585	Oil Tube Bracket	1	
	12	S 112	Hexagon Head Cap Screw	2	3/8 - 16 X 1 in.
	13	S 121 B	Hexagon Head Cap Screw	2	7/16 - 14 X 2 1/2 in.
	14	68908	Lock Plate	2	
	15	151355	Lock Plate	2	
	16	3000632	Connection Gasket	1	
	17	3026676	Hexagon Flange Head Cap Screw	4	7/16 - 14 X 7 1/2 Inch.
		3031385	Pressure Relief Valve	1	
	18	107695	Roll Pin	2	
	19	127316	Plain Washer	1	5/8 in.
	20	3001719	Straight Pin	1	
	21	3026925	Oil Transfer Connection	1	
	22	3026926	Compression Spring	1	
	23	3026927	Pressure Regulator Plunger	1	
	24	3177089	Lubricating Oil Suction Tube	1	

© 2017 Cummins Inc., Box 3005, Columbus, IN 47202-3005 U.S.A.
Terms of Use and Disclaimers | Recommended System Requirements
Need Assistance? Please click on the Contact Us button in the top right corner of any page.

Parts Catalog - Option Detail

Electronic Parts Catalog - Option Detail				
Option	**Group**	**Graphic**	**Film Card**	**Date**
FH8711-02	16.01.1	fh601gm	K50	30-AUG-90
Engines	G50, K50, K50-DPM, QSK50 CM2150 K107, QSK50 CM2150 MCRS, QSK50 CM2350 K108, QSK50 CM850 MCRS, QSK50 DF CM850/CM2150 MCRS			

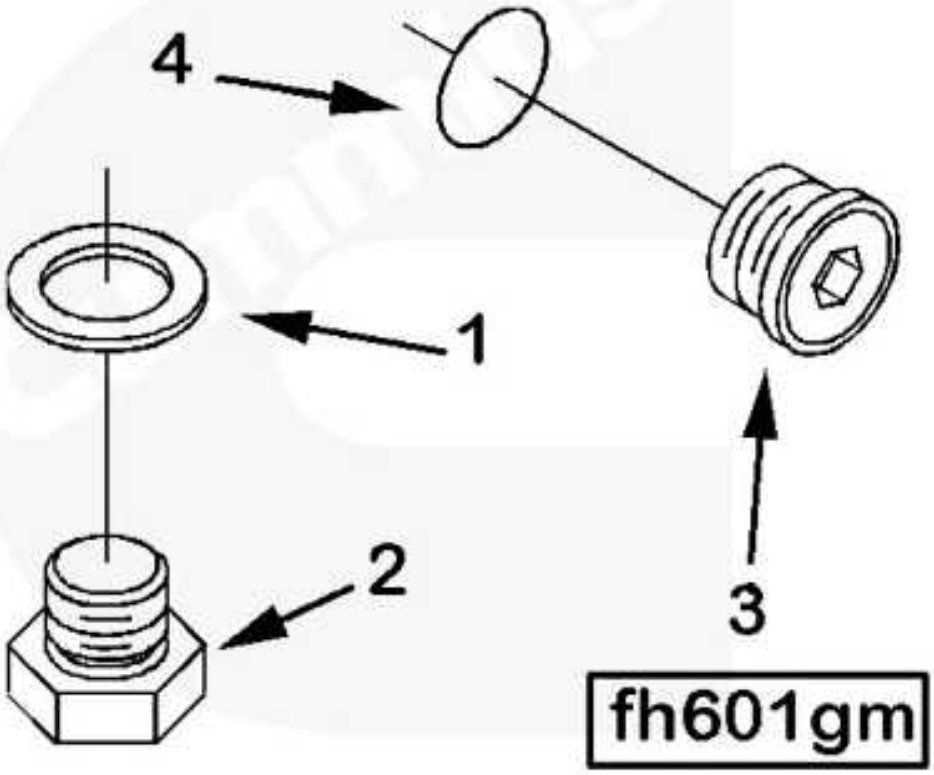

SMALL | MEDIUM | LARGE

Cart	Ref No	Part Number	Part Description	Required	Remarks
View My Cart					
		FH8711-02	Magnetic Pickup Location Plug		5/8-18 UNF and 3/4-16 UNF...(More)
					plugs for the magnetic pick-
					up locations in the
					Flywheel housing.
					For use with both wet or dry
					flywheel housings. Reguired
					when Woodward 2301 electro-
					hydraulic governor, American
					Bosch governor, Cummins EFC
					governor,
					Tachometer, or speed switch

					is not specified.
	1	8265	Plain Washer	1	5/8 in.
	2	163086	Threaded Plug	1	
		3046202	Threaded Plug	1	3/4 - 16 UNF.
	3	3040810	Threaded Plug	1	
	4	3046201	O-Ring Seal	1	

© 2017 Cummins Inc., Box 3005, Columbus, IN 47202-3005 U.S.A.
Terms of Use and Disclaimers | Recommended System Requirements
Need Assistance? Please click on the Contact Us button in the top right corner of any page.

Parts Catalog - Option Detail

Electronic Parts Catalog - Option Detail				
Option	**Group**	**Graphic**	**Film Card**	**Date**
BP6126-02	01.02.1	bb603gd	K50	01-NOV-15
Engines	G50, K50, K50-DPM, QSK50 CM2150 K107, QSK50 CM2150 MCRS, QSK50 CM2350 K108, QSK50 CM850 MCRS, QSK50 DF CM850/CM2150 MCRS			

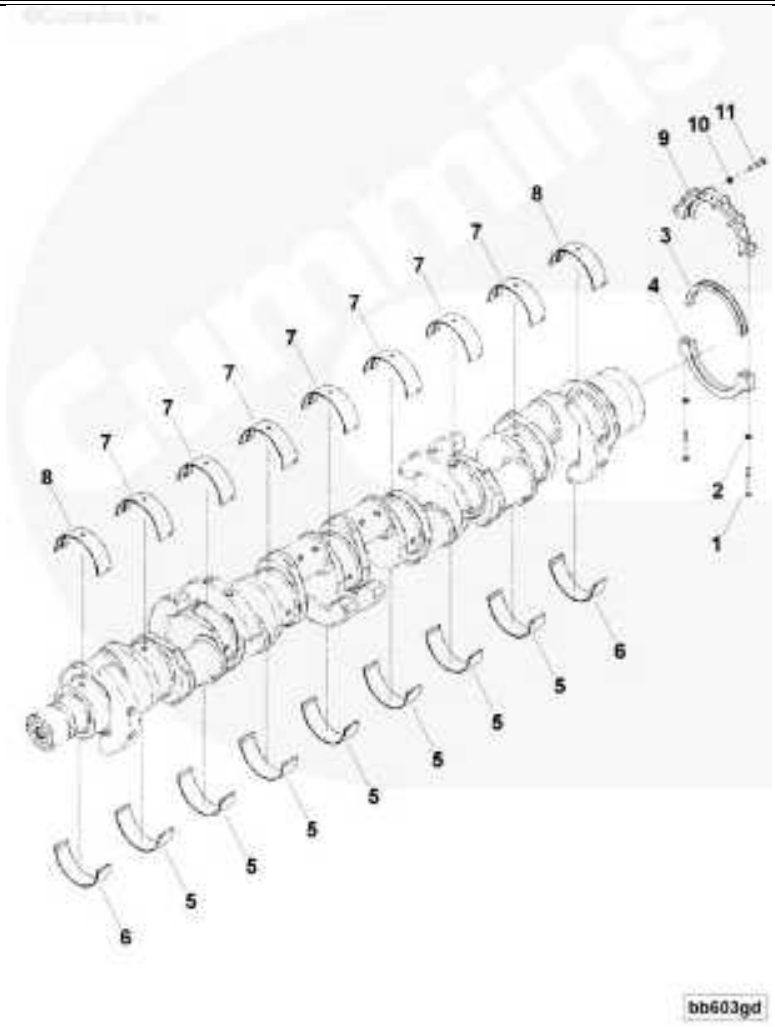

SMALL | MEDIUM | LARGE

Cart	Ref No	Part Number	Part Description	Required	Remarks
View My Cart					
		BP6126-02	Main Bearings		Main Bearing Shell...(More)
					Fuel Control System: Dual STC
					(Stepped Timing Control)
☐	1	S 105	Hexagon Head Cap Screw	2	3/8 - 16 X 3 1/2 in.
☐	2	S 604	Lock Washer	2	3/8 in.
☐	3	3000139	Thrust Bearing	2	
☐	4	3175281	Bearing Support	1	

	5	3650905	Main Bearing	7	
	6	3650910	Main Bearing	2	
	7	3650915	Main Bearing	7	
	8	3650920	Main Bearing	2	
	9	3000138	Bearing Support	1	
	10	S 610	Lock Washer	6	7/16 in.
	11	106069	Hexagon Head Cap Screw	6	7/16 - 14 X 2 in.
		3018210	Main Bearing Kit	A/R	Standard.
	3	3000139	Thrust Bearing	2	Standard.
	5	3650905	Main Bearing	7	
	6	3650910	Main Bearing	2	
	7	3650915	Main Bearing	7	
	8	3650920	Main Bearing	2	
		3018211	Main Bearing Kit	A/R	.010 in Oversize.
	3	3000139	Thrust Bearing	2	Standard.
	5	3650906	Main Bearing	7	.010 in Oversize.
	6	3650911	Main Bearing	2	,010 in Oversize.
	7	3650916	Main Bearing	7	.010 in Oversize.
	8	3650921	Main Bearing	2	.010 in Oversize.
		3018212	Main Bearing Kit	A/R	.020 in Oversize.
	3	3000139	Thrust Bearing	2	Standard.
	5	3650907	Main Bearing	7	.020 in Oversize.
	6	3650912	Main Bearing	2	.020 in Oversize.
	7	3650917	Main Bearing	7	.020 in Oversize.
	8	3650922	Main Bearing	2	.020 in Oversize.
		3018213	Main Bearing Kit	A/R	.030 in Oversize.
	3	3000139	Thrust Bearing	2	Standard.
	5	3650908	Main Bearing	7	.030 in Oversize.
	6	3650913	Main Bearing	2	.030 in Oversize.
	7	3650918	Main Bearing	7	.030 in Oversize.
	8	3650923	Main Bearing	2	.030 in Oversize.
	3	3001708	Thrust Bearing	A/R	.010 in Oversize.

	3	3001709	Thrust Bearing	A/R	.020 in Oversize.
	3	3034075	Thrust Bearing	A/R	.030 in Oversize.
	3	3034076	Thrust Bearing	A/R	.040 in Oversize.
	5	3650909	Main Bearing	A/R	.040 in Oversize.
	6	3650914	Main Bearing	A/R	.040 in Oversize.
	7	3650919	Main Bearing	A/R	.040 in Oversize.
	8	3650924	Main Bearing	A/R	.040 in Oversize.

© 2017 Cummins Inc., Box 3005, Columbus, IN 47202-3005 U.S.A.
Terms of Use and Disclaimers | Recommended System Requirements
Need Assistance? Please click on the Contact Us button in the top right corner of any page.

Parts Catalog - Option Detail

Electronic Parts Catalog - Option Detail				
Option	**Group**	**Graphic**	**Film Card**	**Date**
PP2354	01.06.1	null	K50	08-AUG-14
Engines	G50, K50, K50-DPM, QSK50 CM2150 K107, QSK50 CM2150 MCRS, QSK50 CM2350 K108, QSK50 CM850 MCRS, QSK50 DF CM850/CM2150 MCRS			

Cart	Ref No	Part Number	Part Description	Required	Remarks
View My Cart					
		PP2354	Nameplate Mounting		Nameplate Mounting...(More)
					Certified Model Name:
					KTA50-G8
					CPL: 2354
					Certified By: None
					Engine Aspiration:
					Turbocharger
					Application: Power Generation
					Timing gear Code: KA
					Power Rating: Intermittent
					KTA-50G8 With LTA K-2000
					Technology.
					Less Water Pumps.
					For Standby, Prime and
					Continuous Applications.
					Datapate to be Stamped:
					Revised Firing Order
☐		3628129	Decal	2	
		3629668	Nameplate Mounting	1	
☐		3633720	Drive Screw	4	
		3629946	Instruction Tag	1	

© 2017 Cummins Inc., Box 3005, Columbus, IN 47202-3005 U.S.A.
Terms of Use and Disclaimers | Recommended System Requirements
Need Assistance? Please click on the Contact Us button in the top right corner of any page.

Parts Catalog - Option Detail

Electronic Parts Catalog - Option Detail				
Option	**Group**	**Graphic**	**Film Card**	**Date**
FP6180	05.13	null	K50	12-AUG-91
Engines	G50, K50, K50-DPM, QSK50 CM2150 K107, QSK50 CM2150 MCRS, QSK50 CM2350 K108, QSK50 CM850 MCRS, QSK50 DF CM850/CM2150 MCRS			

Cart	Ref No	Part Number	Part Description	Required	Remarks
View My Cart					
		FP6180			Cummins EFC governor system....(More)
					Includes:
					* Normally closed actuator
					mounted in fuel pump AFC
					cavity
					* AFC style PTG/AUTO fuel
					pump
					Requires: 24volt, Insulated
					Or Negative ground power
					supply.
					For Use With:
					* Customer supplied governor
					Control module and magnetic
					pick-up.
☐		3379231	Governor Bulletin	1	Revision 03
					print date 09/86.

© 2017 Cummins Inc., Box 3005, Columbus, IN 47202-3005 U.S.A.
Terms of Use and Disclaimers | Recommended System Requirements
Need Assistance? Please click on the Contact Us button in the top right corner of any page.

Parts Catalog - Option Detail

Electronic Parts Catalog - Option Detail				
Option	**Group**	**Graphic**	**Film Card**	**Date**
OF6009-06	07.03	of602gj	K50	02-MAR-15
Engines	G50, K50, K50-DPM, QSK50 CM2150 K107, QSK50 CM2150 MCRS, QSK50 CM2350 K108, QSK50 CM850 MCRS, QSK50 DF CM850/CM2150 MCRS			

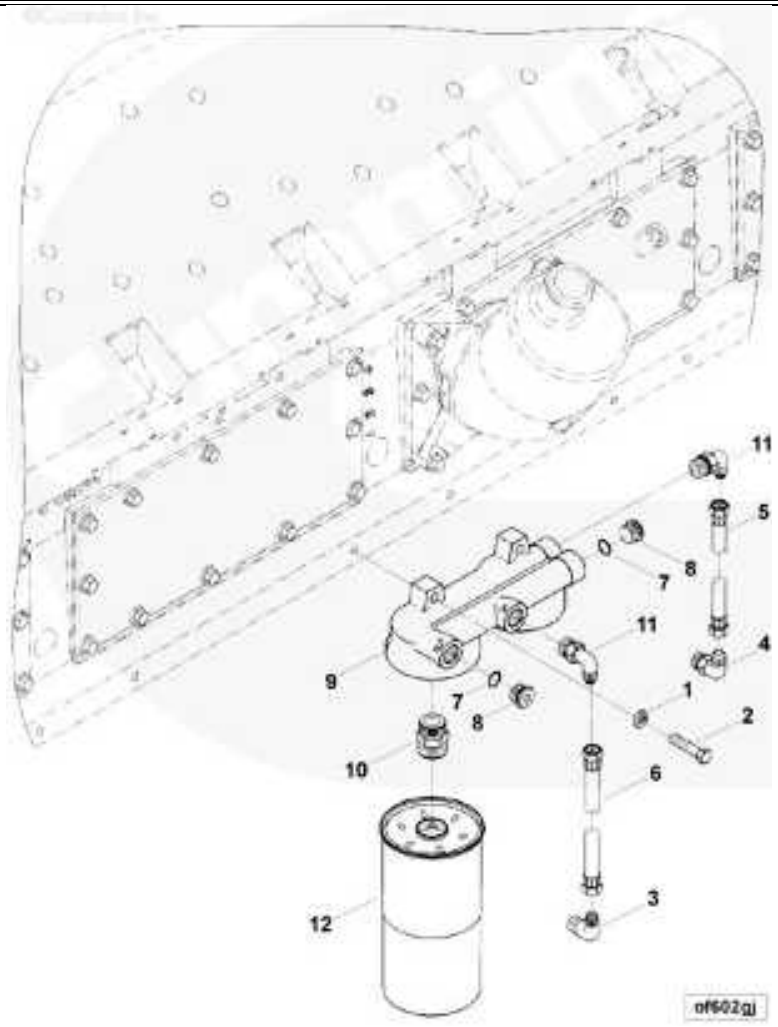

SMALL | MEDIUM | LARGE

Cart	Ref No	Part Number	Part Description	Required	Remarks
View My Cart					
		OF6009-06	Bypass Oil Filter		Bypass Oil Filter...(More)
					Filter Manufacturer/Model:
					Cummins Filtration LF0777
					Cartridge Type: Replaceable
					Spin-on
					Element Quantity: 2
					Mounting Location: Remote

					Plumbing Supplied: Yes
	1	S 610	Lock Washer	2	7/16 in.
	2	106069	Hexagon Head Cap Screw	2	7/16 - 14 X 2 in.
	3	3629496	Male Adapter Elbow	1	
	4	4345903	Male Union Elbow	1	
	5	AK 6015 SS	Flexible Hose	1	
	6	AK 6018 SS	Flexible Hose	1	
		4381247	Oil Bypass Filter	1	
		3021658	Lubricating Oil Filter Head	1	
	7	43696 A	O-Ring Seal	2	
	8	139473	O-Ring Plug	2	7/8 - 14 UNF.
		3033405	Lubricating Oil Filter Head	1	
	9	3010636	Fuel Filter Head	1	
	10	3037219	Filter Head Insert	2	
	11	3177198	Male Union Elbow	2	
	12	3889311	Oil Bypass Filter Element	2	
		3889382	Decal	2	Not Shown in Art

© 2017 Cummins Inc., Box 3005, Columbus, IN 47202-3005 U.S.A.
Terms of Use and Disclaimers | Recommended System Requirements
Need Assistance? Please click on the Contact Us button in the top right corner of any page.

Parts Catalog - Option Detail

Electronic Parts Catalog - Option Detail				
Option	**Group**	**Graphic**	**Film Card**	**Date**
PP2354	06.03.2	pp601gy	K50	25-MAR-02
Engines	G50, K50, K50-DPM, QSK50 CM2150 K107, QSK50 CM2150 MCRS, QSK50 CM2350 K108, QSK50 CM850 MCRS, QSK50 DF CM850/CM2150 MCRS			

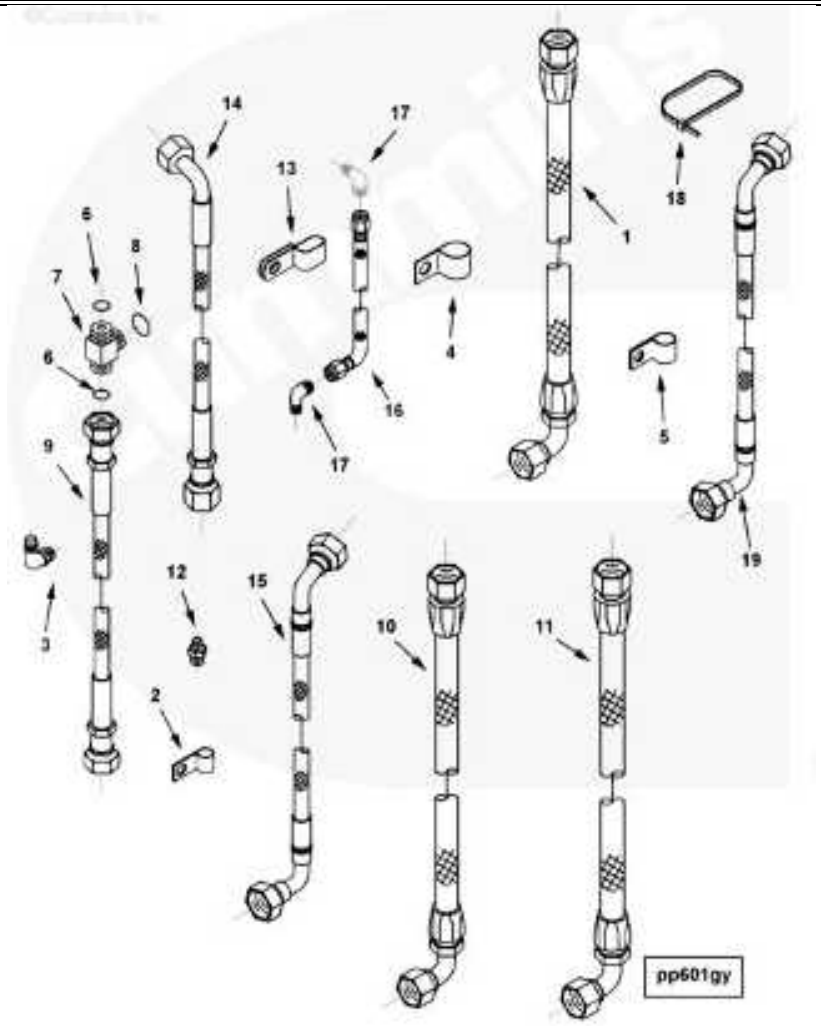

SMALL | MEDIUM | LARGE

Cart	Ref No	Part Number	Part Description	Required	Remarks
View My Cart					
		PP2354	Oil Control Connection		
		3631666	Step Oil Drain Connection		
☐	1	AS 4016 SL	Flexible Hose	2	
☐	2	108722	Clip	2	
☐	3	3037662	Male Union Elbow	2	
		3631667	Connection , Left Bank Oil Supply		
☐	4	69465	Clip	2	

	5	69911 A	Clip	2	
		3630734	Male Union Tee	1	
	6	3627695	O-Ring Seal	2	
	7	3630735	Male Union Tee	1	
	8	3630740	O-Ring Seal	1	
	9	3632028	Flexible Hose	2	
		3631668	Connection , Left Bank Fuel Block		
	10	AS 4054 40SL		1	
	11	AS 4056 40SL		1	
	12	68138	Male Connector	2	1/8 NPTF x 7/16-20
	13	3178520	Clip	6	
		3631669	Connection , Left Bank Oil Supply		
	5	69911 A	Clip	3	
	14	3630864	Flexible Hose	1	
	15	3631438	Flexible Hose	1	
		3631671	Connection , Right Bank Fuel Block	1	
	16	AS 4057 SS	Flexible Hose	2	
	17	68139	Male Adapter Elbow	2	1/8 NPTF X 7/16 - 20 (90).
	18	3018920	Wire Tie Clamp	1	
	13	3178520	Clip	5	
		3631672	Connection , Right Bank Oil Supply		
	5	69911 A	Clip	2	
	14	3630864	Flexible Hose	1	
	19	3631437	Flexible Hose	1	
		3631673	Connection , Right Bank Oil Supply		
	4	69465	Clip	2	
	5	69911 A	Clip	2	
		3630734	Male Union Tee	1	
	6	3627695	O-Ring Seal	2	
	7	3630735	Male Union Tee	1	
	8	3630740	O-Ring Seal	1	
	9	3632028	Flexible Hose	2	

© 2017 Cummins Inc., Box 3005, Columbus, IN 47202-3005 U.S.A.
Terms of Use and Disclaimers | Recommended System Requirements
Need Assistance? Please click on the Contact Us button in the top right corner of any page.

Parts Catalog - Option Detail

Electronic Parts Catalog - Option Detail				
Option	**Group**	**Graphic**	**Film Card**	**Date**
OP6027-08	07.01	op605gx	K50	17-DEC-12
Engines	G50, K50, K50-DPM, QSK50 CM2150 K107, QSK50 CM2150 MCRS, QSK50 CM2350 K108, QSK50 CM850 MCRS, QSK50 DF CM850/CM2150 MCRS			

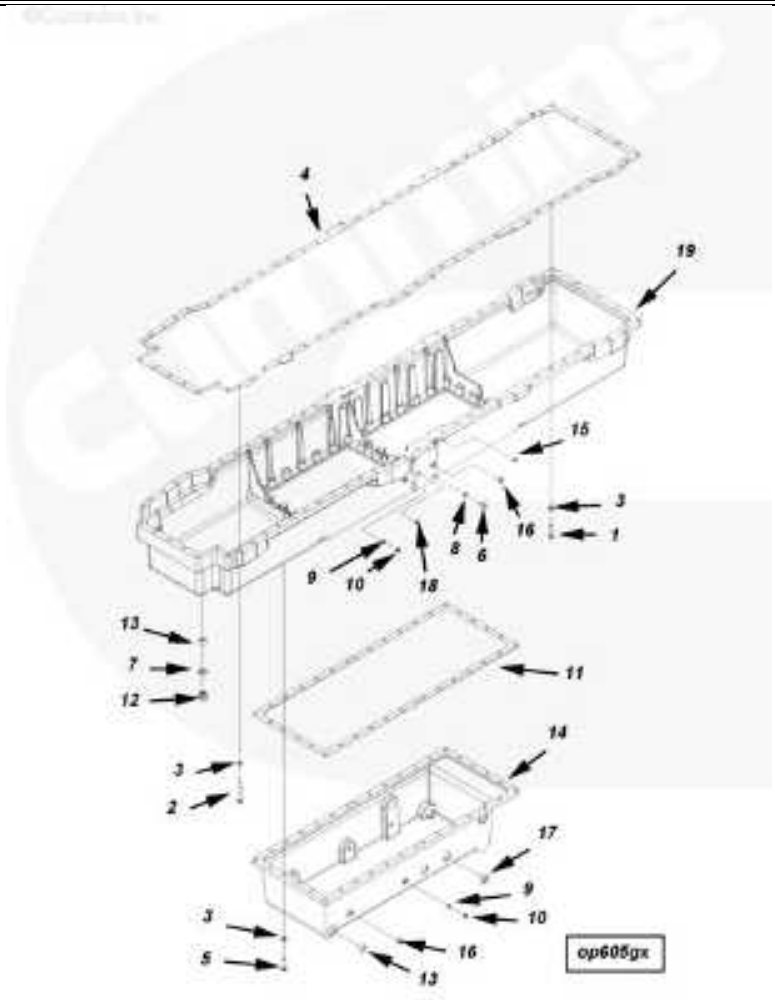

SMALL | MEDIUM | LARGE

Cart	Ref No	Part Number	Part Description	Required	Remarks
View My Cart					
		OP6027-08	Oil Pan		High capacity center sump oil...(More)
					pan. Oil pan adapter with
					both end openings cast closed
					and removable center sump.
					Angularity: (Unknown) oil pan
					capacity:
					* High Level: 47 US Gallon

					* Low Level: 39 US Gallon.
		3011523	Oil Pan Mounting Adapter	1	
	1	106069	Hexagon Head Cap Screw	46	7/16 - 14 X 2 in.
	2	108767	Hexagon Head Cap Screw	28	7/16 - 14 X 3 1/2 in.
	3	3000082	Plain Washer	74	15/32 in.
	4	3043213	Oil Pan Gasket	1	
		3644167	Oil Pan	1	
	5	S 140	Hexagon Head Cap Screw	36	7/16 - 14 x 1 3/4 in.
	6	S 181 C	Hexagon Head Cap Screw	4	1/2 - 20 X 3/4 in.
	7	67946	Plain Washer	2	1 1/32 in.
	3	3000082	Plain Washer	36	15/32 in.
	8	3000204	Plain Washer	4	
		3037536	Threaded Plug	3	9/16 - 18 UNF
	9	3037537	O-Ring Seal	3	
	10	3040813	Threaded Plug	3	9/16 - 18 UNF
	11	3043214	Oil Pan Gasket	1	
	12	3055069	Threaded Plug	2	1 - 18 UNS.
		3087562	Oil Pan	1	
	13	200845	Threaded Insert	2	
	14	3630256	Oil Pan	1	
	15	3628604	Pipe Plug	2	1/8 - 27 X 0.3 in.
	16	3628606	Pipe Plug	3	1/2 - 14.
	17	3628608	Pipe Plug	3	
	18	3628609	Pipe Plug	2	3/8-18.
		3642791	Oil Pan Adapter	1	
	13	200845	Threaded Insert	2	
	19	3642665	Oil Pan Adapter	1	

© 2017 Cummins Inc., Box 3005, Columbus, IN 47202-3005 U.S.A.
Terms of Use and Disclaimers | Recommended System Requirements
Need Assistance? Please click on the Contact Us button in the top right corner of any page.

Parts Catalog - Option Detail

Electronic Parts Catalog - Option Detail				
Option	**Group**	**Graphic**	**Film Card**	**Date**
OB6701-01	07.03.1	null	K50	17-JUL-00
Engines	G50, K50, K50-DPM, QSK50 CM2150 K107, QSK50 CM2150 MCRS, QSK50 CM2350 K108, QSK50 CM850 MCRS, QSK50 DF CM850/CM2150 MCRS			

Cart	Ref No	Part Number	Part Description	Required	Remarks
View My Cart					
		OB6701-01	Sight Glass Location Plugs		Plugs for the sight glass...(More)
					mounting locations in the oil
					pan adapter when the sight
					glass is not specified.
					Cannot be used with subbase
					oil pans on KT38/KTA38 and
					KTA50 engines.
☐	1	3000204	Plain Washer	4	
☐	2	S 181 C	Hexagon Head Cap Screw	4	1/2 - 20 X 3/4 in.

© 2017 Cummins Inc., Box 3005, Columbus, IN 47202-3005 U.S.A.
Terms of Use and Disclaimers | Recommended System Requirements
Need Assistance? Please click on the Contact Us button in the top right corner of any page.

Parts Catalog - Option Detail

Electronic Parts Catalog - Option Detail				
Option	**Group**	**Graphic**	**Film Card**	**Date**
PP2354-01	07.04	null	K50	08-AUG-14
Engines	G50, K50, K50-DPM, QSK50 CM2150 K107, QSK50 CM2150 MCRS, QSK50 CM2350 K108, QSK50 CM850 MCRS, QSK50 DF CM850/CM2150 MCRS			

Cart	Ref No	Part Number	Part Description	Required	Remarks
View My Cart					
		PP2354-01	Oil Supply Connection		Oil Supply Connection...(More)
					Certified Model Name:
					KTA50-G8
					CPL: 2354
					Certified By: None
					Engine Aspiration:
					Turbocharger
					Application: Power Generation
					Power Rating: Intermittent
					KTA-50G8 With LTA K-2000
					Technology.
					Less Water Pumps.
					For Standby, Prime and
					Continuous Applications.
		3630849	Oil Supply Connection	1	
☐		3084539	O-Ring Seal	4	
☐		3178257	Socket Head Cap Screw	8	1/4 - 20 X 7/8 in.
☐		3630738	Male Union Elbow	4	
☐		3046201	O-Ring Seal	1	
☐		3627695	O-Ring Seal	1	
		3630739	Male Adapter Elbow	1	
☐		3630829	Oil Supply Connection	4	
		3631666	Step Oil Drain Connection	2	
☐		AS 4016 SL	Flexible Hose	1	
☐		108722	Clip	1	
☐		3037662	Male Union Elbow	1	
		3631667	Connection , Left Bank Oil Supply	1	

		69911 A	Clip	2	
		3630734	Male Union Tee	1	
		3627695	O-Ring Seal	2	
		3630735	Male Union Tee	1	
		3630740	O-Ring Seal	1	
		3632028	Flexible Hose	2	
		3631669	Connection , Left Bank Oil Supply	1	
		69911 A	Clip	3	
		3630864	Flexible Hose	1	
		3634749	Flexible Hose	1	
		3631672	Connection , Right Bank Oil Supply	1	
		69911 A	Clip	2	
		3630864	Flexible Hose	1	
		3631437	Flexible Hose	1	
		3631673	Connection , Right Bank Oil Supply	1	
		69911 A	Clip	2	
		3630734	Male Union Tee	1	
		3627695	O-Ring Seal	1	
		3630735	Male Union Tee	1	
		3630740	O-Ring Seal	1	
		3632028	Flexible Hose	2	

© 2017 Cummins Inc., Box 3005, Columbus, IN 47202-3005 U.S.A.
Terms of Use and Disclaimers | Recommended System Requirements
Need Assistance? Please click on the Contact Us button in the top right corner of any page.

Parts Catalog - Option Detail

Electronic Parts Catalog - Option Detail				
Option	**Group**	**Graphic**	**Film Card**	**Date**
LF6705-07	07.04	lf605gt	K50	06-NOV-15
Engines	G50, K50, K50-DPM, QSK50 CM2150 K107, QSK50 CM2150 MCRS, QSK50 CM2350 K108, QSK50 CM850 MCRS, QSK50 DF CM850/CM2150 MCRS			

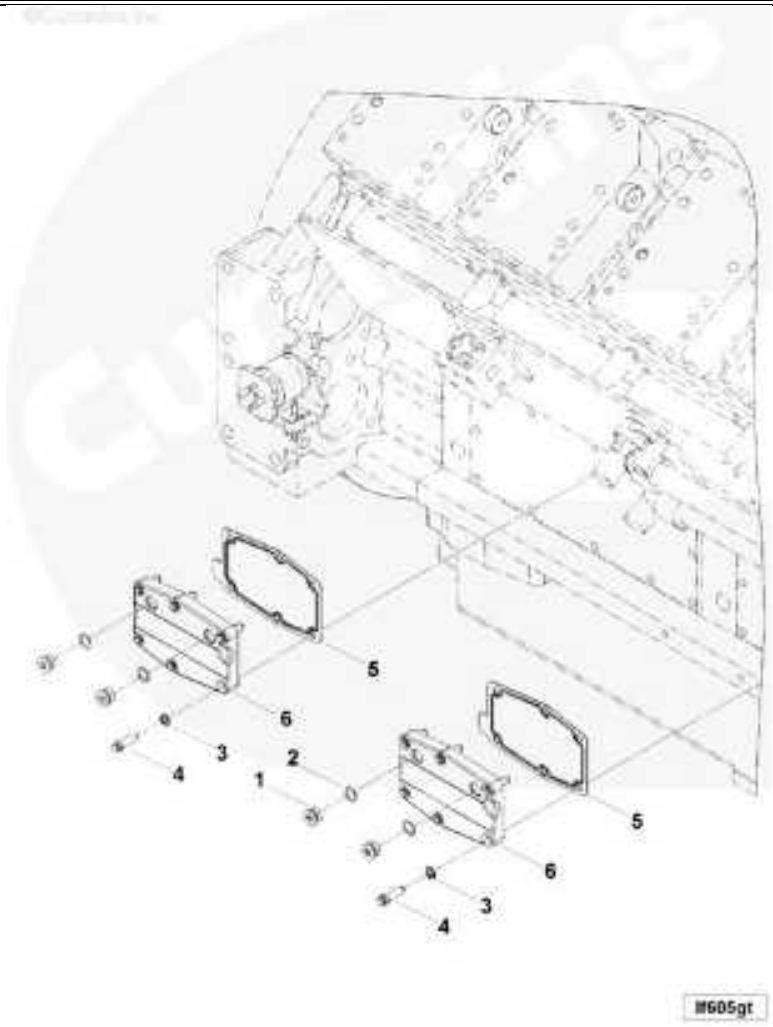

SMALL | MEDIUM | LARGE

Cart	Ref No	Part Number	Part Description	Required	Remarks
View My Cart					
		LF6705-07	Oil Transfer Connection		CONNECTION,OIL TRANSFER...(More)
					Component Supplied: Oil
					Transfer Connection
					Intended Lube Oil Filter
					Mounting Location: Left Bank
					Side Of Engine
					Oil Bypass filter Usage:

					1) Can Not use When Factory
					Mounted Bypass Filter is Not
					Specified.
					2) Can Not Use When Bypass
					Filter Is Mounted On The Same
					Side As The Main Oil Filter.
					Prelube Pump Port Provided:
					No
		3046202	Threaded Plug	1	3/4 - 16 UNF.
	1	3040810	Threaded Plug	1	
	2	3046201	O-Ring Seal	1	
		3628228	Oil Transfer Connection	1	
	3	S 604	Lock Washer	12	3/8 in.
	4	191772	Twelve Point Cap Screw	12	3/8 - 16 X 1 1/4 in.
		3046202	Threaded Plug	3	3/4 - 16 UNF.
	1	3040810	Threaded Plug	1	
	2	3046201	O-Ring Seal	1	
	5	3648607	Cover Plate Gasket	2	
	6	3645045	Oil Transfer Connection	2	

© 2017 Cummins Inc., Box 3005, Columbus, IN 47202-3005 U.S.A.
Terms of Use and Disclaimers | Recommended System Requirements
Need Assistance? Please click on the Contact Us button in the top right corner of any page.

Parts Catalog - Option Detail

Electronic Parts Catalog - Option Detail				
Option	**Group**	**Graphic**	**Film Card**	**Date**
SS6033-05	03.01	null	K50	13-JUN-15
Engines	G50, K50, K50-DPM, QSK50 CM2150 K107, QSK50 CM2150 MCRS, QSK50 CM2350 K108, QSK50 CM850 MCRS, QSK50 DF CM850/CM2150 MCRS			

Cart	Ref No	Part Number	Part Description	Required	Remarks
View My Cart					
		SS6033-05	Paint		Paint...(More)
					Color: Onan Green and Primer
					Color Coat: One Primer and
					one Green
					Items Included: Instruction
					Tag
		3643480	Instruction Tag	1	
		3991084	Nameplate	2	

© 2017 Cummins Inc., Box 3005, Columbus, IN 47202-3005 U.S.A.
Terms of Use and Disclaimers | Recommended System Requirements
Need Assistance? Please click on the Contact Us button in the top right corner of any page.

Parts Catalog - Option Detail

Electronic Parts Catalog - Option Detail				
Option	**Group**	**Graphic**	**Film Card**	**Date**
PP2354-06	01.04	cx600gb	K50	30-NOV-15
Engines	G50, K50, K50-DPM, QSK50 CM2150 K107, QSK50 CM2150 MCRS, QSK50 CM2350 K108, QSK50 CM850 MCRS, QSK50 DF CM850/CM2150 MCRS			

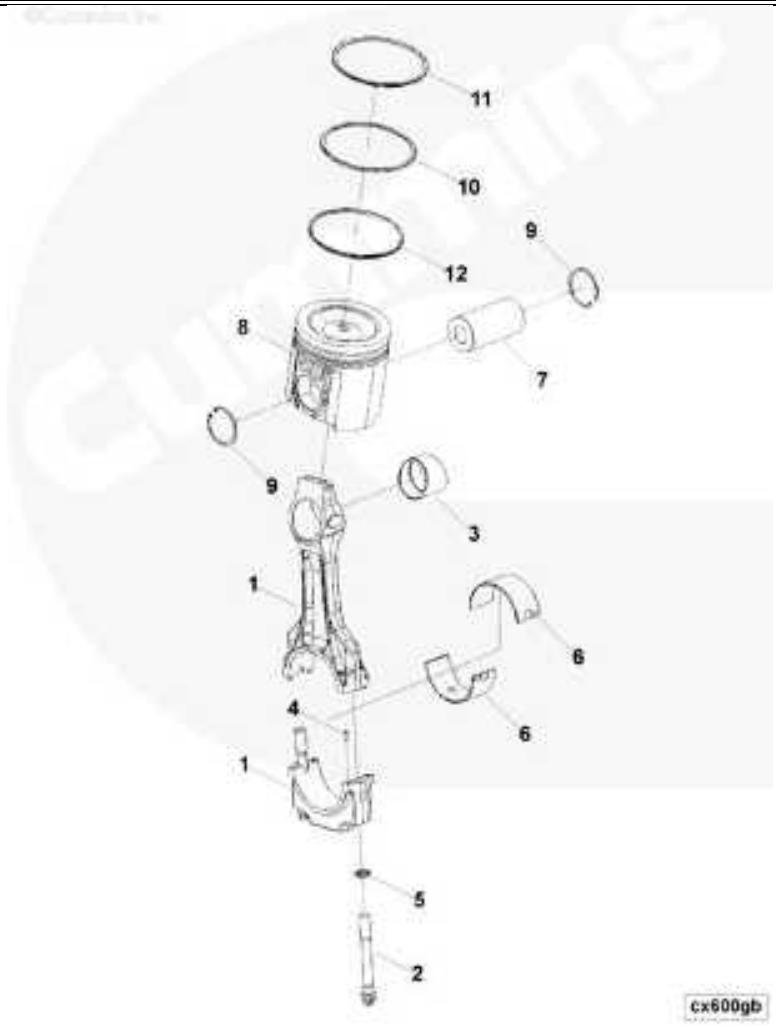

SMALL | MEDIUM | LARGE

Cart	Ref No	Part Number	Part Description	Required	Remarks
View My Cart					
		PP2354-06	Connecting Rod And Piston		Connecting Rod And Piston...(More)
					Certified Model Name:
					KTA50-G8
					CPL: 2354
					Certified By: None
					Engine Aspiration:
					Turbocharger

					Application: Power Generation
					Power Rating: Intermittent
					KTA-50G8 With LTA K-2000
					Technology.
					Less Water Pumps.
					Includes:
					Premium Performance Parts
					Consisting Of:
					Dual NI-Resist Pistons With
					Off-Set Piston Pin.
					For Standby, Prime, And
					Continuous Applications.
		3632225	Engine Connecting Rod	16	
	1	3632169	Engine Connecting Rod	1	
	2	3013266	Fracture Resistant Screw	2	
	3	3043909	Bushing	1	
	4	69558	Pin Dowel	4	
	5	205126	Plain Washer	2	5/8 in.
	6	3650900	Connecting Rod Bearing	32	
	7	4095009	Piston Pin	16	
	8	3630916	Engine Piston	16	
	9	205269	Retaining Ring	32	
	10	4924584	Compression Piston Ring	16	
	11	4958913	Compression Piston Ring	16	
	12	4958914	Oil Piston Ring	16	
	6	3650901	Connecting Rod Bearing	A/R	0.254 mm Oversized
	6	3650902	Connecting Rod Bearing	A/R	0.508 mm Oversized
	6	3650903	Connecting Rod Bearing	A/R	0.762 mm Oversized
	6	3650904	Connecting Rod Bearing	A/R	1.016 mm Oversized
		3804885	Engine Piston Kit	A/R	Standard.
	7	4095009	Piston Pin	1	
	8	3630916	Engine Piston	1	
	9	205269	Retaining Ring	2	

© 2017 Cummins Inc., Box 3005, Columbus, IN 47202-3005 U.S.A.
Terms of Use and Disclaimers | Recommended System Requirements
Need Assistance? Please click on the Contact Us button in the top right corner of any page.

Parts Catalog - Option Detail

Electronic Parts Catalog - Option Detail				
Option	**Group**	**Graphic**	**Film Card**	**Date**
ST6733	13.05	st604gd	K50	01-SEP-03
Engines	G50, K50, K50-DPM, QSK50 CM2150 K107, QSK50 CM2150 MCRS, QSK50 CM2350 K108, QSK50 CM850 MCRS, QSK50 DF CM850/CM2150 MCRS			

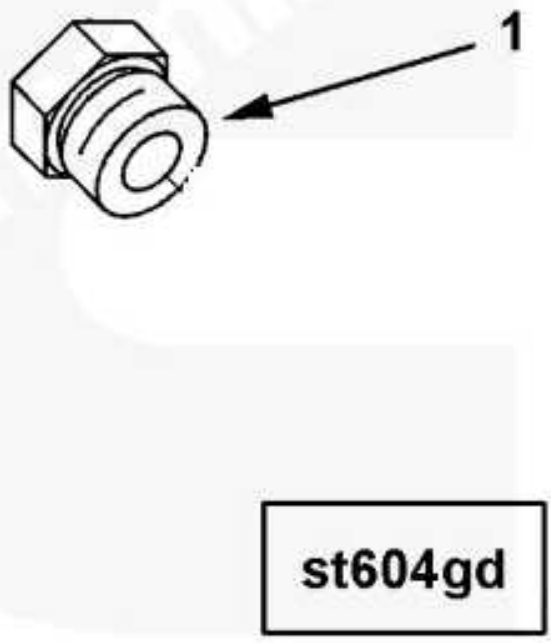

SMALL | MEDIUM | LARGE

Cart	Ref No	Part Number	Part Description	Required	Remarks
View My Cart					
		ST6733	Prelub Plumbing		Prelub plumbing...(More)
					plug to be fitted in oil pan
					when prelub plumbing is not
					required, or is supplied by
					the customer.
☐	1	3032629	Threaded Plug	1	1 5/16 - 12 UNF.

© 2017 Cummins Inc., Box 3005, Columbus, IN 47202-3005 U.S.A.
Terms of Use and Disclaimers | Recommended System Requirements
Need Assistance? Please click on the Contact Us button in the top right corner of any page.

Parts Catalog - Option Detail

Electronic Parts Catalog - Option Detail				
Option	**Group**	**Graphic**	**Film Card**	**Date**
PP2354-04	06.03.1	null	K50	08-AUG-14
Engines	G50, K50, K50-DPM, QSK50 CM2150 K107, QSK50 CM2150 MCRS, QSK50 CM2350 K108, QSK50 CM850 MCRS, QSK50 DF CM850/CM2150 MCRS			

Cart	Ref No	Part Number	Part Description	Required	Remarks
View My Cart					
		PP2354-04			RB Oil Control Connection...(More)
					Certified Model Name:
					KTA50-G8
					CPL: 2354
					Certified By: None
					Engine Aspiration:
					Turbocharger
					Application: Power Generation
					Power Rating: Intermittent
					KTA-50G8 With LTA K-2000
					Technology.
					Less Water Pumps.
					For Standby, Prime and
					Continuous Applications.
		3631369	Connection , Right Bank Oil Control	1	
☐		3037662	Male Union Elbow	2	
		3630525	Check Valve	1	
☐		178079	Check Valve	1	
☐		3046201	O-Ring Seal	1	
		3063019	Male Connector	1	
☐		3630736	Male Union Elbow	1	
☐		3046201	O-Ring Seal	1	
		3630737	Male Adapter Elbow	1	
☐		3630740	O-Ring Seal	1	
☐		3634701	Male Adapter Elbow	1	
☐		3630740	O-Ring Seal	1	
		3634700	Male Adapter Elbow	1	

		3631671	Connection , Right Bank Fuel Block	1	
		3018920	Wire Tie Clamp	1	
		3037662	Male Union Elbow	1	
		3178520	Clip	5	
		3638079	Flexible Hose	2	
		3647528	Male Connector	1	

© 2017 Cummins Inc., Box 3005, Columbus, IN 47202-3005 U.S.A.
Terms of Use and Disclaimers | Recommended System Requirements
Need Assistance? Please click on the Contact Us button in the top right corner of any page.

Parts Catalog - Option Detail

Electronic Parts Catalog - Option Detail				
Option	**Group**	**Graphic**	**Film Card**	**Date**
PP2354-03	03.01	pp602gf	K50	08-AUG-14
Engines	G50, K50, K50-DPM, QSK50 CM2150 K107, QSK50 CM2150 MCRS, QSK50 CM2350 K108, QSK50 CM850 MCRS, QSK50 DF CM850/CM2150 MCRS			

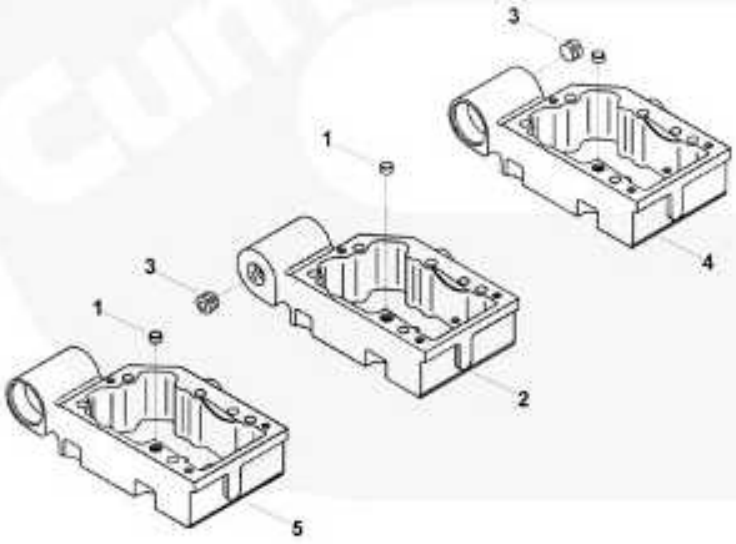

pp602gf

SMALL | MEDIUM | LARGE

Cart	Ref No	Part Number	Part Description	Required	Remarks
View My Cart					
		PP2354-03	Rocker Lever Housing		Rocker Lever Housing...(More)
					Certified Model Name:
					KTA50-G8
					CPL: 2354
					Certified By: None
					Engine Aspiration:
					Turbocharger

					Application: Power Generation
					Power Rating: Intermittent
					KTA-50G8 With LTA K-2000
					Technology.
					Less Water Pumps.
					For Standby, Prime and
					Continuous Applications.
		3627648	Rocker Lever Housing Assembly	1	
	1	205129	Ring Dowel	1	
	2	3629538	Rocker Lever Housing	1	
	3	3628607	Pipe Plug	2	3/4-14.
		3627647	Rocker Lever Housing Assembly	1	
	1	205129	Ring Dowel	1	
	4	3202199	Rocker Lever Housing	1	
		3039097	Rocker Lever Housing Assembly	14	
	1	205129	Ring Dowel	1	
	5	3177713	Rocker Lever Housing	1	

© 2017 Cummins Inc., Box 3005, Columbus, IN 47202-3005 U.S.A.
Terms of Use and Disclaimers | Recommended System Requirements
Need Assistance? Please click on the Contact Us button in the top right corner of any page.

Parts Catalog - Option Detail

Electronic Parts Catalog - Option Detail				
Option	**Group**	**Graphic**	**Film Card**	**Date**
BP6126-06	03.01	null	K50	19-OCT-13
Engines	G50, K50, K50-DPM, QSK50 CM2150 K107, QSK50 CM2150 MCRS, QSK50 CM2350 K108, QSK50 CM850 MCRS, QSK50 DF CM850/CM2150 MCRS			

Cart	Ref No	Part Number	Part Description	Required	Remarks
View My Cart					
		BP6126-06	Rocker Lever And Cover		Rocker Lever...(More)
					Fuel Control System: Dual STC
					(Stepped Timing Control)
					Water Pump Included: Yes
		3010248	Valve Mounting Cover	16	
☐		3628194	Hexagon Head Cap Screw	2	3/8 - 16 X 4 1/2 in.
☐		3628196	Hexagon Head Cap Screw	1	3/8 - 16 X 2 in.
☐		3628902	Plain Washer	3	
☐		4920076	Rocker Lever Cover Gasket	1	
		3010388	Rocker Lever Cover	15	
☐		205128	Plain Washer	32	1/2 in.
☐		205393	Twelve Point Cap Screw	16	1/2 - 13 X 2 in.
☐		205394	Twelve Point Cap Screw	16	1/2 - 13 X 4 1/2 in.
☐		4913488	Rocker Lever	16	
☐		S 212	Regular Hexagon Nut	3	1/2 - 20 UNF.
☐		168306	Slotted Set Screw	3	
☐		3053476	Rocker Lever	1	
☐		207344	Bushing	1	
☐		208084	Rivet	1	
		3049438	Rocker Lever	1	
☐		3053478	Rocker Lever	1	
☐		194037	Rocker Lever Socket	1	
☐		207226	Bushing	1	
☐		208084	Rivet	1	
		3049437	Rocker Lever	1	
☐		3053479	Rocker Lever	1	
☐		207344	Bushing	1	

		3049432	Rocker Lever	1	
		3176772	Rocker Lever Shaft	1	
		203933	Expansion Plug	1	
		3049164	Rocker Lever Shaft	1	
		3628772	Rocker Lever Cover	1	
		3038938	Rocker Lever Cover	1	
		3628604	Pipe Plug	1	
		4987350	Rocker Arm Mounting Housing	16	
		205128	Plain Washer	6	1/2 in.
		205357	Twelve Point Cap Screw	5	1/2 - 13 X 3 3/4 in.
		205393	Twelve Point Cap Screw	1	1/2 - 13 X 2 in.
		4959090	Rocker Lever Housing Gasket	1	
		3628605	Pipe Plug	1	

© 2017 Cummins Inc., Box 3005, Columbus, IN 47202-3005 U.S.A.
Terms of Use and Disclaimers | Recommended System Requirements
Need Assistance? Please click on the Contact Us button in the top right corner of any page.

Parts Catalog - Option Detail

Electronic Parts Catalog - Option Detail				
Option	**Group**	**Graphic**	**Film Card**	**Date**
BP6126	16.03.1	null	K50	15-JUL-10
Engines	G50, K50, K50-DPM, QSK50 CM2150 K107, QSK50 CM2150 MCRS, QSK50 CM2350 K108, QSK50 CM850 MCRS, QSK50 DF CM850/CM2150 MCRS			

Cart	Ref No	Part Number	Part Description	Required	Remarks
View My Cart					
		BP6126	Shipping Bracket		Shipping Bracket...(More)
					Fuel Control System: Dual STC
					(Stepped Timing Control)
					Water Pump Included: Yes
		3175300	Shipping Bracket	1	
☐		S 152 A	Hexagon Head Cap Screw	8	3/4 - 10 X 2 in.
☐		S 611	Lock Washer	8	3/4 in.
☐		3175861	Shipping Bracket	2	
		3014696	Protective Cover	1	
☐		44092 F	Protective Cover	4	
☐		44092 G	Protective Cover	2	
		3175400	Protective Cover	2	
		3175547	Protective Cover	1	
		3175549	Protective Cover	1	
		3175550	Protective Cover	4	
		3175552	Protective Cover	1	
		3175553	Protective Cover	4	
		3175554	Protective Cover	1	
		3175555	Protective Cover	1	
		3175607	Protective Cover	3	
		3175608	Protective Cover	2	
		3177018	Protective Cover	4	
		3175554	Protective Cover	1	

© 2017 Cummins Inc., Box 3005, Columbus, IN 47202-3005 U.S.A.
Terms of Use and Disclaimers | Recommended System Requirements
Need Assistance? Please click on the Contact Us button in the top right corner of any page.

Parts Catalog - Option Detail

Electronic Parts Catalog - Option Detail				
Option	**Group**	**Graphic**	**Film Card**	**Date**
ST6026-02	13.05	st600gh	K50	14-MAY-01
Engines	G50, K50, K50-DPM, QSK50 CM2150 K107, QSK50 CM2150 MCRS, QSK50 CM2350 K108, QSK50 CM850 MCRS, QSK50 DF CM850/CM2150 MCRS			

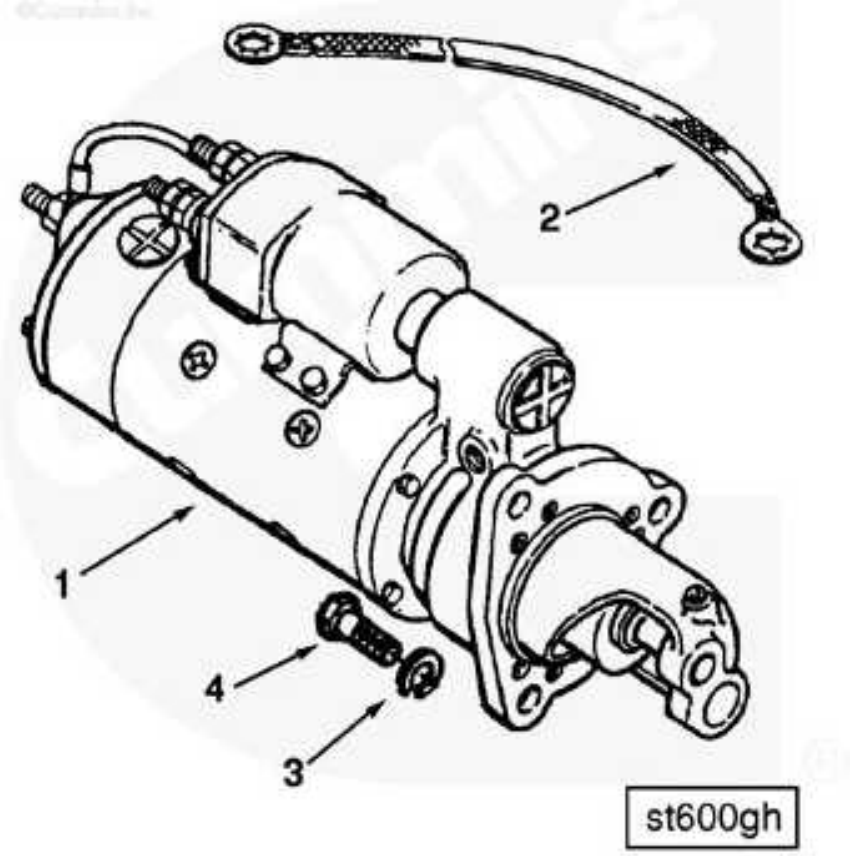

SMALL | MEDIUM | LARGE

Cart	Ref No	Part Number	Part Description	Required	Remarks
View My Cart					
		ST6026-02	Starter		Starting motor...(More)
					starter motor count: 2
					manufacturer:
					Prestolite
					Model: MS7
					Power Supply: Electric
					mounting location(s): RB
					quad 1, RB quad 2 qsk 50:
					Over cylinders 7-8 qsk 38:
					Over cylinders 5-6 pinion

					diametral pitch: 6/8 pinion
					gear outside diameter(mm):
					57.1 (2.25in) mounting flange
					type: SAE #3 (3 bolt x 120
					degrees) frame size
					diameter(mm): 130.17
					(5.125in) pilot diameter(mm):
					92 (3.62in)
					Starting Motor Length(mm):
					383 (15.1in)
					Voltage: 24.
☐	1	3632273	Starting Motor	2	
☐	2	3018924	Ground Wire	2	
☐	3	S 603	Lock Washer	6	5/8 in.
☐	4	158250	Twelve Point Cap Screw	6	5/8 - 11 X 1 3/4 Inch.

© 2017 Cummins Inc., Box 3005, Columbus, IN 47202-3005 U.S.A.
Terms of Use and Disclaimers | Recommended System Requirements
Need Assistance? Please click on the Contact Us button in the top right corner of any page.

Parts Catalog - Option Detail

Electronic Parts Catalog - Option Detail				
Option	**Group**	**Graphic**	**Film Card**	**Date**
ST6705	13.05	st401gb	K50	06-NOV-95
Engines	G50, K50, K50-DPM, QSK50 CM2150 K107, QSK50 CM2150 MCRS, QSK50 CM2350 K108, QSK50 CM850 MCRS, QSK50 DF CM850/CM2150 MCRS			

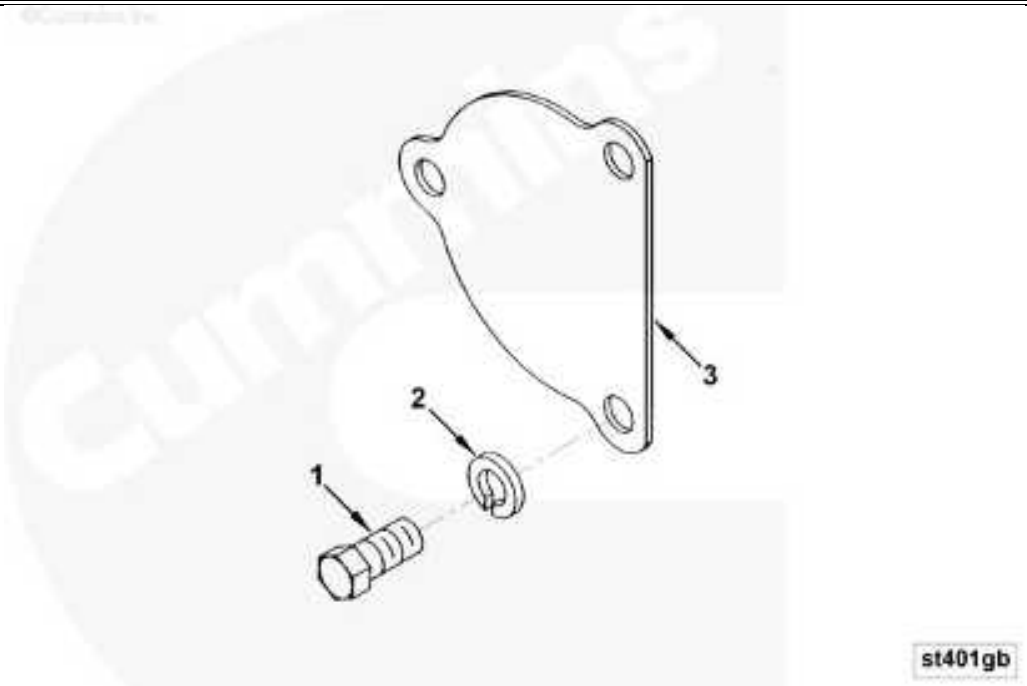

SMALL | MEDIUM | LARGE

Cart	Ref No	Part Number	Part Description	Required	Remarks
View My Cart					
		ST6705	Starter Mounting		Starter hole cover for use...(More)
					with dry flywheel housing and
					electric starters.
☐	1	S 181	Hexagon Head Cap Screw	3	5/8 - 11 X 1 1/4 in.
☐	2	S 603	Lock Washer	3	5/8 in.
☐	3	3628411	Starter Flange Cover	1	

© 2017 Cummins Inc., Box 3005, Columbus, IN 47202-3005 U.S.A.
Terms of Use and Disclaimers | Recommended System Requirements
Need Assistance? Please click on the Contact Us button in the top right corner of any page.

Parts Catalog - Option Detail

Electronic Parts Catalog - Option Detail				
Option	**Group**	**Graphic**	**Film Card**	**Date**
PP2354-03	06.01.6	pp613gl	K50	08-AUG-14
Engines	G50, K50, K50-DPM, QSK50 CM2150 K107, QSK50 CM2150 MCRS, QSK50 CM2350 K108, QSK50 CM850 MCRS, QSK50 DF CM850/CM2150 MCRS			

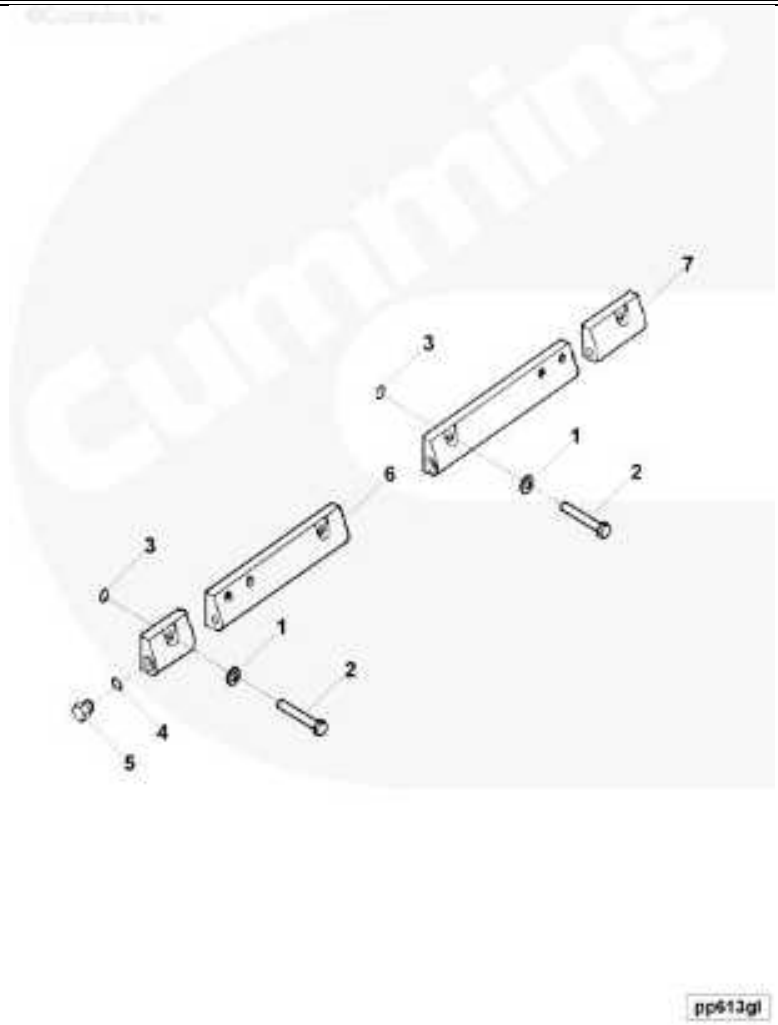

pp613gl

SMALL | MEDIUM | LARGE

Cart	Ref No	Part Number	Part Description	Required	Remarks
View My Cart					
		PP2354-03	Step Oil Manifold		STC Oil Manifold...(More)
					Certified Model Name:
					KTA50-G8
					CPL: 2354
					Certified By: None
					Engine Aspiration:
					Turbocharger

					Application: Power Generation
					Power Rating: Intermittent
					KTA-50G8 With LTA K-2000
					Technology.
					Less Water Pumps.
					Includes:
					Dual STC Stepped Timing
					Control.
					ORS Hoses for STC and
					Turbocharger Supply.
					For Standby, Prime and
					Continuous Applications.
		3040159	Manifold , Oil Right Bank	1	
	1	127018	Plain Washer	8	1/4 in.
	2	3001811	Twelve Point Cap Screw	8	1/4 - 20 X 1 in.
	3	3084539	O-Ring Seal	8	
		3040157	Oil Manifold	1	
		3023217	Threaded Plug	2	7/16 - 20 UNF.
	4	3036666	O-Ring Seal	1	
	5	3630034	Threaded Plug	1	
	6	3084623	Oil Manifold	1	
		3040158	Oil Manifold	1	
		3023217	Threaded Plug	2	7/16 - 20 UNF.
	4	3036666	O-Ring Seal	1	
	5	3630034	Threaded Plug	1	
	7	3084624	Oil Manifold	1	
		3040160	Manifold , Oil Left Bank	1	
	1	127018	Plain Washer	8	1/4 in.
	2	3001811	Twelve Point Cap Screw	8	1/4 - 20 X 1 in.
	3	3084539	O-Ring Seal	8	
		3040157	Oil Manifold	1	
		3023217	Threaded Plug	2	7/16 - 20 UNF.
	4	3036666	O-Ring Seal	1	
	5	3630034	Threaded Plug	1	
	6	3084623	Oil Manifold	1	
		3040158	Oil Manifold	1	
		3023217	Threaded Plug	2	7/16 - 20 UNF.

	4	3036666	O-Ring Seal	1	
	5	3630034	Threaded Plug	1	
	7	3084624	Oil Manifold	1	

© 2017 Cummins Inc., Box 3005, Columbus, IN 47202-3005 U.S.A.
Terms of Use and Disclaimers | Recommended System Requirements
Need Assistance? Please click on the Contact Us button in the top right corner of any page.

Parts Catalog - Option Detail

Electronic Parts Catalog - Option Detail				
Option	**Group**	**Graphic**	**Film Card**	**Date**
PP6818-01	01.04	pp603gw	K50	13-OCT-03
Engines	G50, K50, K50-DPM, QSK50 CM2150 K107, QSK50 CM2150 MCRS, QSK50 CM2350 K108, QSK50 CM850 MCRS, QSK50 DF CM850/CM2150 MCRS			

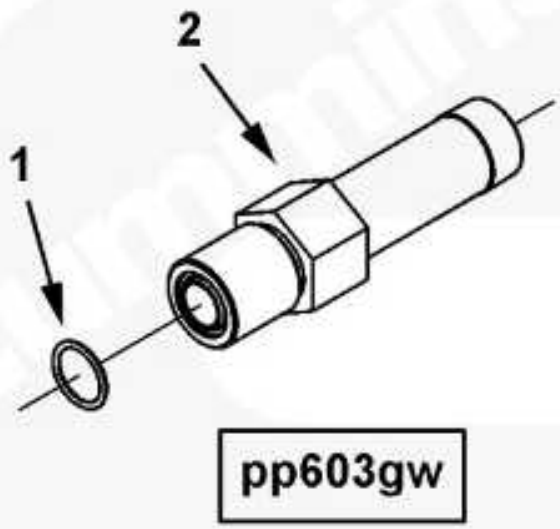

SMALL | MEDIUM | LARGE

Cart	Ref No	Part Number	Part Description	Required	Remarks
View My Cart					
		PP6818-01	Step Oil Supply Fitting		Fittings for dual raised STC...(More)
					oil supply.
					For Use With: A) SAE "00"
					flywheel housing, right bank
					mounted lube oil filters and
					left bank mounted starters or
					no starters. B) SAE "0"
					flywheel housing and left, or
					right bank mounted starters
					or no starters.
☐		3630877	Male Union	2	

	1	3630740	O-Ring Seal	1	
	2	3630878	Male Connector	1	

© 2017 Cummins Inc., Box 3005, Columbus, IN 47202-3005 U.S.A.
Terms of Use and Disclaimers | Recommended System Requirements
Need Assistance? Please click on the Contact Us button in the top right corner of any page.

Parts Catalog - Option Detail

Electronic Parts Catalog - Option Detail				
Option	**Group**	**Graphic**	**Film Card**	**Date**
PP2354-03	06.01.1	pp601gi	K50	08-AUG-14
Engines	G50, K50, K50-DPM, QSK50 CM2150 K107, QSK50 CM2150 MCRS, QSK50 CM2350 K108, QSK50 CM850 MCRS, QSK50 DF CM850/CM2150 MCRS			

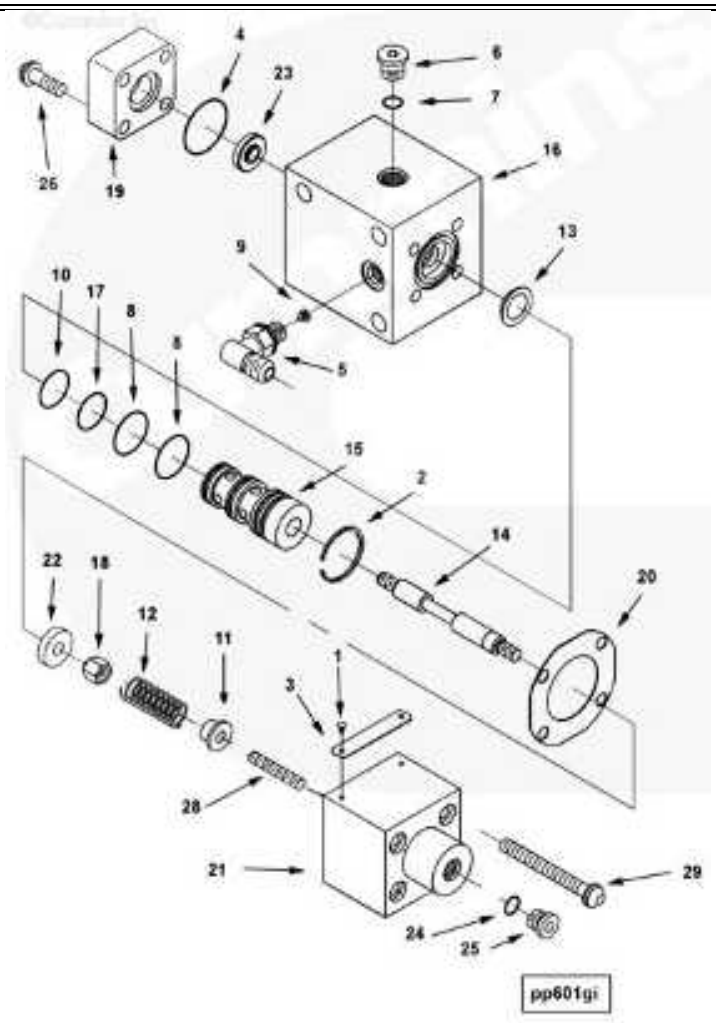

SMALL | MEDIUM | LARGE

Cart	Ref No	Part Number	Part Description	Required	Remarks
View My Cart					
		PP2354-03	Oil Control Valve		Oil Control Valve...(More)
					Certified Model Name:
					KTA50-G8
					CPL: 2354
					Certified By: None
					Engine Aspiration:
					Turbocharger

					Application: Power Generation
					Power Rating: Intermittent
					KTA-50G8 With LTA K-2000
					Technology.
					Less Water Pumps.
					For Standby, Prime and
					Continuous Applications.
		3633381	Oil Control Valve	1	
	1	S 2286	Drive Screw	2	3/16 in.
	2	S 16240	Retaining Ring	1	
	3	105375	Nameplate	1	
	4	3034408	O-Ring Seal	1	
	5	3038743	Check Valve	1	
		3040814	Threaded Plug	1	7/16 - 20 UNF.
	6	3036665	Threaded Plug	1	7/16 - 20 UNF.
	7	3036666	O-Ring Seal	1	
	8	3042542	O-Ring Seal	2	
	9	3044993	Injector Orifice Plug	1	
	10	3045986	O-Ring Seal	1	
	11	3049041	Spring Retainer	1	
	12	3056072	Compression Spring	1	
	13	3054411	Leaf Spring	1	
		3060605	Barrel And Plunger	1	
	14	3053667	Oil Control Valve Plunger	1	
	15	3060604	Oil Control Valve Barrel	1	
	16	3060606	Oil Control Valve Body	1	
	17	3066914	O-Ring Seal	1	
	18	3069015	Lock Nut	2	1/4 - 28 UNF.
	19	3069989	Oil Control Valve Cover	1	
	20	3070108	Control Valve Body Gasket	1	
	21	4009927	Diaphragm Cover	1	
	22	3070186	Plain Washer	1	1/4 in.
	23	3073998	Valve Disc	1	
		3417076	Threaded Plug	1	
	24	3034412	O-Ring Seal	1	
	25	3417103	Threaded Plug	1	
	26	3417077	Socket Head Cap Screw	4	

	28	3417096	Socket Set Screw	1	
	29	3417098	Socket Head Cap Screw	4	

© 2017 Cummins Inc., Box 3005, Columbus, IN 47202-3005 U.S.A.
Terms of Use and Disclaimers | Recommended System Requirements
Need Assistance? Please click on the Contact Us button in the top right corner of any page.

Parts Catalog - Option Detail

Electronic Parts Catalog - Option Detail				
Option	**Group**	**Graphic**	**Film Card**	**Date**
PP2354-02	06.01.2	pp613gn	K50	08-AUG-14
Engines	G50, K50, K50-DPM, QSK50 CM2150 K107, QSK50 CM2150 MCRS, QSK50 CM2350 K108, QSK50 CM850 MCRS, QSK50 DF CM850/CM2150 MCRS			

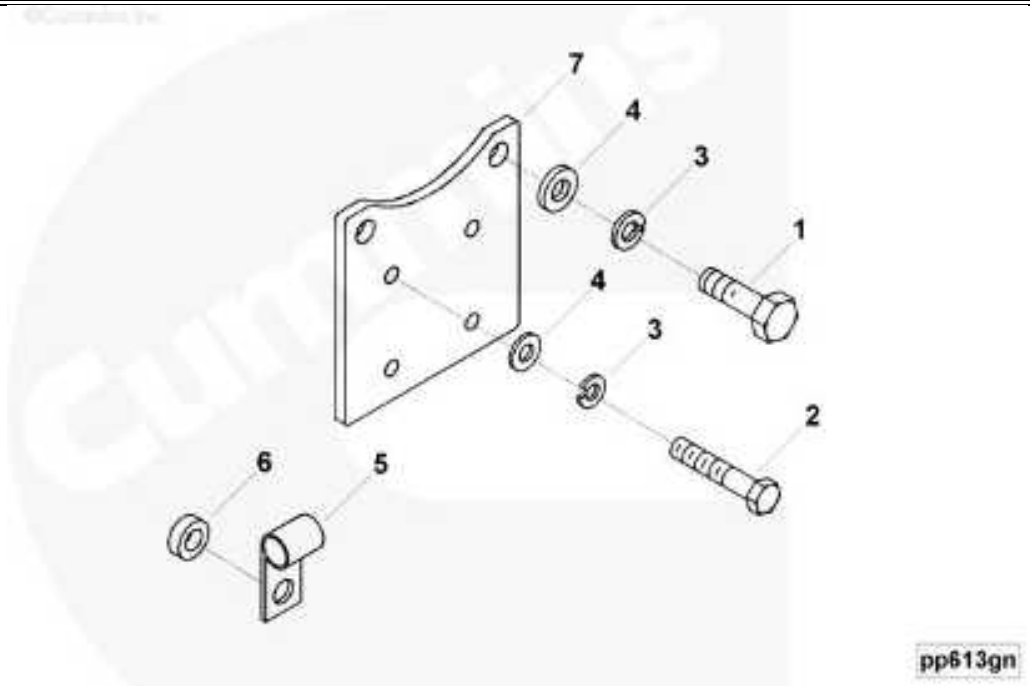

SMALL | MEDIUM | LARGE

Cart	Ref No	Part Number	Part Description	Required	Remarks
View My Cart					
		PP2354-02	Oil Control Mounting		Oil Control Valve Mounting...(More)
					Certified Model Name:
					KTA50-G8
					CPL: 2354
					Certified By: None
					Engine Aspiration:
					Turbocharger
					Application: Power Generation
					Power Rating: Intermittent
					KTA-50G8 With LTA K-2000
					Technology.
					Less Water Pumps.
					For Standby, Prime and
					Continuous Applciations.

		3631670	Oil Control Valve Mounting	2	
	1	S 108 B	Hexagon Head Cap Screw	1	5/16 - 24 X 3 1/4 in.
	2	S 164	Hexagon Head Cap Screw	2	5/16 - 24 X 3 in.
	3	S 605	Lock Washer	3	5/16 in.
	4	S 626	Plain Washer	3	5/16 in.
	5	3627412	Clip	1	
	6	3632879	Mounting Spacer	1	
	7	3634172	Valve Bracket	1	

© 2017 Cummins Inc., Box 3005, Columbus, IN 47202-3005 U.S.A.
Terms of Use and Disclaimers | Recommended System Requirements
Need Assistance? Please click on the Contact Us button in the top right corner of any page.

Parts Catalog - Option Detail

Electronic Parts Catalog - Option Detail				
Option	**Group**	**Graphic**	**Film Card**	**Date**
PP2354	06.01.3	kf600ga	K50	06-JUN-97
Engines	G50, K50, K50-DPM, QSK50 CM2150 K107, QSK50 CM2150 MCRS, QSK50 CM2350 K108, QSK50 CM850 MCRS, QSK50 DF CM850/CM2150 MCRS			

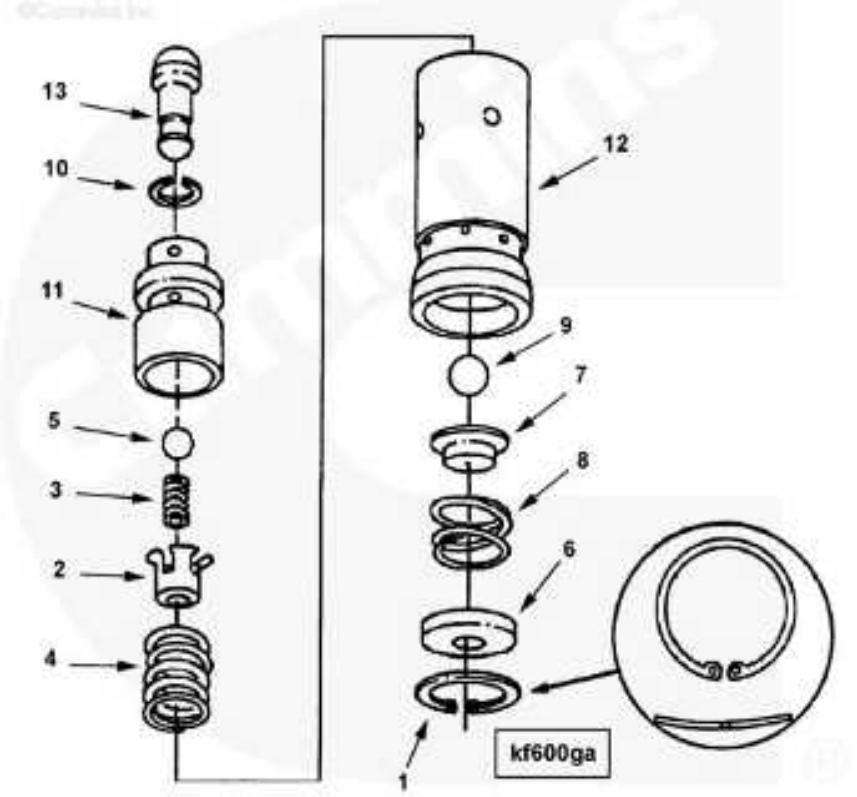

SMALL | MEDIUM | LARGE

Cart	Ref No	Part Number	Part Description	Required	Remarks
View My Cart					
		PP2354	Tappet		
☐		3075381	Hydraulic Variable Timing Tappet	16	
☐	1	3027988	Retaining Ring	1	
☐	2	3076033	Ball Guide	1	
	3	3027994	Compression Spring	1	
☐	4	3054852	Injector Spring	1	
	5	3027996	Check Ball	1	
	6	3085345	Tappet Socket	1	
	7	3085344	Ball Guide	1	
	8	4077027	Injector Spring	1	
☐	9	3062119	Check Ball	1	

	10	3052231	Injector Link Retainer	1	
	11	3053772	Tappet Plunger	1	
	12	3075386	Tappet Sleeve	1	
	13	3052233	Injector Plunger Link	1	
		3804700	Step Tappet Repair Kit	1	
	1	3027988	Retaining Ring	1	
	2	3076033	Ball Guide	1	
	3	3027994	Compression Spring	1	
	4	3054852	Injector Spring	1	
	5	3027996	Check Ball	1	
	6	3085345	Tappet Socket	1	
	7	3085344	Ball Guide	1	
	8	4077027	Injector Spring	1	

© 2017 Cummins Inc., Box 3005, Columbus, IN 47202-3005 U.S.A.
Terms of Use and Disclaimers | Recommended System Requirements
Need Assistance? Please click on the Contact Us button in the top right corner of any page.

Parts Catalog - Option Detail

Electronic Parts Catalog - Option Detail				
Option	**Group**	**Graphic**	**Film Card**	**Date**
PP2354-05	10.06	null	K50	30-NOV-15
Engines	G50, K50, K50-DPM, QSK50 CM2150 K107, QSK50 CM2150 MCRS, QSK50 CM2350 K108, QSK50 CM850 MCRS, QSK50 DF CM850/CM2150 MCRS			

Cart	Ref No	Part Number	Part Description	Required	Remarks
View My Cart					
		PP2354-05	Turbocharger		Turbocharger...(More)
					Certified Model Name:
					KTA50-G8
					CPL: 2354
					Certified By: None
					Engine Aspiration:
					Turbocharger
					Application: Power Generation
					Power Rating: Intermittent
					KTA-50G8 With LTA K-2000
					Technology.
					Less Water Pumps.
					For Standby, Prime and
					Continuous Applications.
		3594164	Turbocharger	1	
		3527619	Dataplate	1	
		3767950	Turbocharger	1	
		2841902	Turbocharger Diffuser	1	
		3502449	Rectangular Ring Seal	1	
		3504967	Plain Washer	4	
		3519163	Drive Screw	2	
		3519627	Turbocharger Bearing	2	
		3519641	Retaining Ring	4	
		3521032	Shaft Wheel Rotor	1	
		3521225	Hexagon Head Set Screw	8	M8 X 1.25 X 16.
		3521442	Split Ring Seal	1	
		3522597	Roll Pin	2	

		3522904	Lock Plate	4	
		3523412	Split Ring Seal	1	
		3524418	Shim	1	
		3524419	Oil Baffle	1	
		3525073	Hexagon Head Set Screw	4	M8 X 1.25 X 25.
		3528109	V Band Clamp	1	
		3529372	Regular Hexagon Nut	1	1/4 - 28 UNF
		3536588	Turbocharger Heat Shield	1	
		3536914	Turbocharger Thrust Bearing	1	
		3539268	Compressor Housing	1	
		3591522	Thrust Collar	1	
		3594555	Turbocharger Bearing Housing	1	
		3771005	Lock Nut	1	
		4036307	Oil Slinger	1	
		4043604	Turbine Housing	1	
		5323925	Turbocharger Compressor Impeller	1	
		3594165	Turbocharger	1	
		3527619	Dataplate	1	
		3767950	Turbocharger	1	
		2841902	Turbocharger Diffuser	1	
		3502449	Rectangular Ring Seal	1	
		3504967	Plain Washer	4	
		3519163	Drive Screw	2	
		3519627	Turbocharger Bearing	2	
		3519641	Retaining Ring	4	
		3521032	Shaft Wheel Rotor	1	
		3521225	Hexagon Head Set Screw	8	M8 X 1.25 X 16.
		3521442	Split Ring Seal	1	
		3522597	Roll Pin	2	
		3522904	Lock Plate	4	
		3523412	Split Ring Seal	1	
		3524418	Shim	1	
		3524419	Oil Baffle	1	
		3525073	Hexagon Head Set Screw	4	M8 X 1.25 X 25.
		3528109	V Band Clamp	1	
		3529372	Regular Hexagon Nut	1	1/4 - 28 UNF
		3536588	Turbocharger Heat Shield	1	

		3536914	Turbocharger Thrust Bearing	1	
		3539268	Compressor Housing	1	
		3591522	Thrust Collar	1	
		3594555	Turbocharger Bearing Housing	1	
		3771005	Lock Nut	1	
		4036307	Oil Slinger	1	
		4043604	Turbine Housing	1	
		5323925	Turbocharger Compressor Impeller	1	
		2882102	Turbocharger Kit	A/R	
		4033450	Aftermarket Turbocharger	1	
		3767950	Turbocharger	1	
		4032456	Turbocharger Gasket Kit	1	
		201048	Connection Gasket	1	
		3037537	O-Ring Seal	1	
		3177942	Turbocharger Gasket	1	

© 2017 Cummins Inc., Box 3005, Columbus, IN 47202-3005 U.S.A.
Terms of Use and Disclaimers | Recommended System Requirements
Need Assistance? Please click on the Contact Us button in the top right corner of any page.

Parts Catalog - Option Detail

Electronic Parts Catalog - Option Detail				
Option	**Group**	**Graphic**	**Film Card**	**Date**
BP6126-04	10.06.1	bp601gq	K50	02-NOV-04
Engines	G50, K50, K50-DPM, QSK50 CM2150 K107, QSK50 CM2150 MCRS, QSK50 CM2350 K108, QSK50 CM850 MCRS, QSK50 DF CM850/CM2150 MCRS			

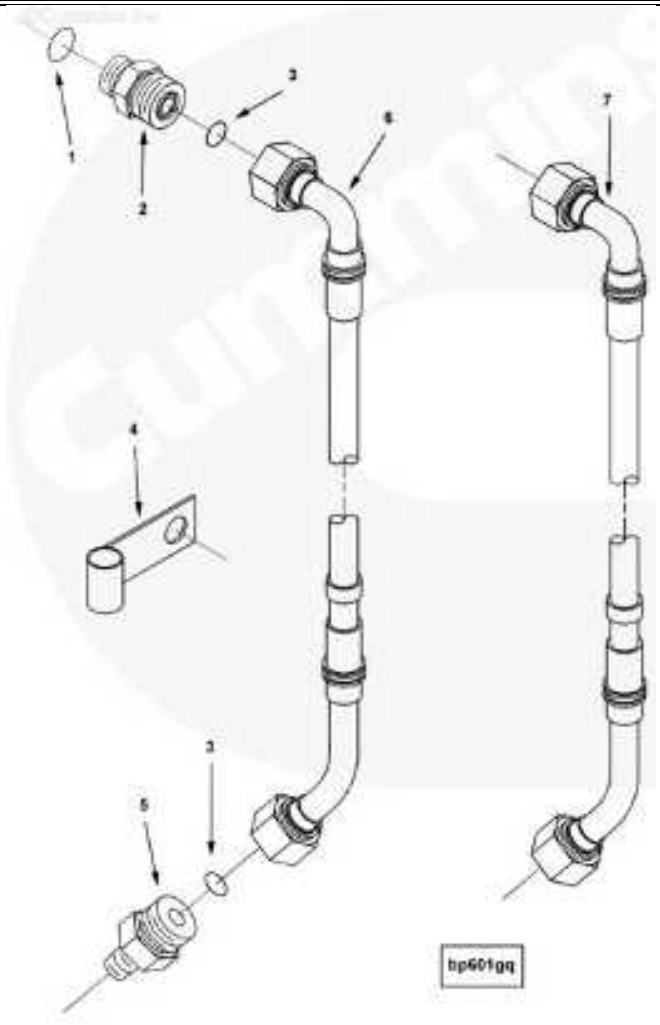

SMALL | MEDIUM | LARGE

Cart	Ref No	Part Number	Part Description	Required	Remarks
View My Cart					
		BP6126-04	Turbocharger Oil Supply Hose		TUR Oil Supply Hose...(More)
					Fuel Control System: Dual STC
					(Stepped Timing Control)
					Water Pump Included: Yes
		3628097	Turbocharger Oil Supply Union	1	
☐		3634685	Male Union	1	
☐	1	3037537	O-Ring Seal	1	

	2	3634687	Male Union	1	
☐	3	3922794	O-Ring Seal	1	
☐	4	3175058	Clip	2	
		3628098	Turbocharger Oil Supply Union	1	
☐		3634685	Male Union	1	
☐	1	3037537	O-Ring Seal	1	
	2	3634687	Male Union	1	
☐	3	3922794	O-Ring Seal	1	
☐	4	3175058	Clip	3	
		3628720	Turbocharger Oil Supply Hose	1	
☐		3634690	Male Union	1	
	5	3634692	Male Union	1	
☐	3	3922794	O-Ring Seal	1	
☐	6	3635032	Flexible Hose	1	
		3628722	Turbocharger Oil Supply Hose	1	
☐		3634690	Male Union	1	
	5	3634692	Male Union	1	
☐	3	3922794	O-Ring Seal	1	
☐	7	3635033	Flexible Hose	1	

© 2017 Cummins Inc., Box 3005, Columbus, IN 47202-3005 U.S.A.
Terms of Use and Disclaimers | Recommended System Requirements
Need Assistance? Please click on the Contact Us button in the top right corner of any page.

Parts Catalog - Option Detail

Electronic Parts Catalog - Option Detail				
Option	**Group**	**Graphic**	**Film Card**	**Date**
4376343	17.01	null	K50	02-JUL-15
Engines	G50, K50, K50-DPM, QSK50 CM2150 K107, QSK50 CM2150 MCRS, QSK50 CM2350 K108, QSK50 CM850 MCRS, QSK50 DF CM850/CM2150 MCRS			

Cart	Ref No	Part Number	Part Description	Required	Remarks
View My Cart					
☐		4376343	Kit, Upper Engine Gasket	A/R	
☐		68910	O-Ring Seal	34	
☐		70415	O-Ring Seal	2	
☐		106143	O-Ring Seal	4	
☐		131026	O-Ring Seal	40	
☐		145528	O-Ring Seal	4	
☐		206277	Intake Manifold Gasket	16	
☐		207244	Injector Seal	16	
☐		216187	O-Ring Seal	2	
☐		3001340	O-Ring Seal	50	
☐		3014304	Rectangular Ring Seal	32	
☐		3023095	Sealing Washer	32	
☐		3028291	O-Ring Seal	32	
☐		3037537	O-Ring Seal	2	
☐		3046201	O-Ring Seal	18	
☐		3047665	Connection Gasket	4	
☐		3049364	Connection Gasket	2	
☐		3049368	Connection Gasket	1	
☐		3052906	Thermostat Housing Gasket	1	
☐		3052908	Water Transfer Connection Gasket	1	
☐		3058812	Dust Seal	20	
☐		3063294	Grommet Seal	8	
☐		3166288	Cylinder Head Gasket	16	
☐		3171368	Turbocharger Gasket	2	
☐		3201585	O-Ring Seal	16	
☐		3348860	Ferrule Seal	12	

		3627695	O-Ring Seal	12	
		3627961	Thermostat Seal	5	
		3628969	Lock Plate	32	
		3630742	Connection Gasket	2	
		3630839	Rocker Lever Housing Gasket	16	
		3633046	Ferrule Seal	16	
		3865994	Rectangular Strip Seal	4	
		3966349	Exhaust Manifold Gasket	16	
		3966350	Exhaust Clamp Seal	8	
		4066112	O-Ring Seal	14	
		4920076	Rocker Lever Cover Gasket	16	

© 2017 Cummins Inc., Box 3005, Columbus, IN 47202-3005 U.S.A.
Terms of Use and Disclaimers | Recommended System Requirements
Need Assistance? Please click on the Contact Us button in the top right corner of any page.

Parts Catalog - Option Detail

Electronic Parts Catalog - Option Detail				
Option	**Group**	**Graphic**	**Film Card**	**Date**
DA6070	01.02.2	da600gj	K50	22-NOV-93
Engines	G50, K50, K50-DPM, QSK50 CM2150 K107, QSK50 CM2150 MCRS, QSK50 CM2350 K108, QSK50 CM850 MCRS, QSK50 DF CM850/CM2150 MCRS			

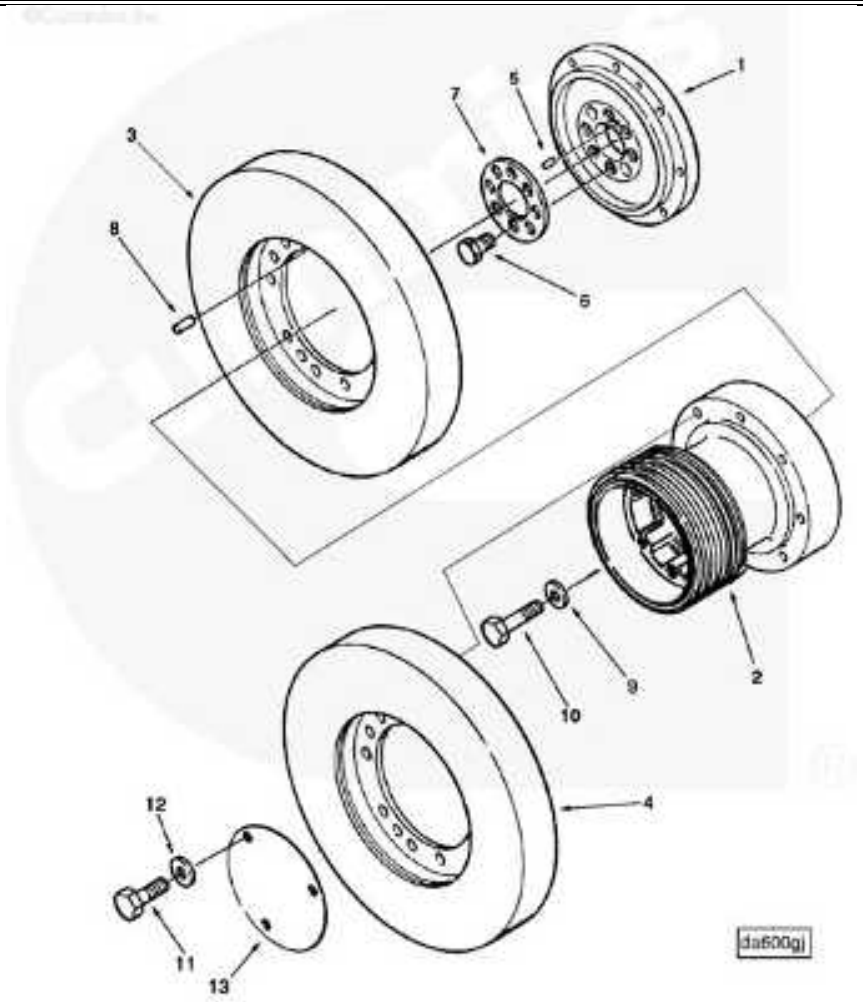

SMALL | MEDIUM | LARGE

Cart	Ref No	Part Number	Part Description	Required	Remarks
View My Cart					
		DA6070	Vibration Damper		Dual standard viscosity...(More)
					vibration dampers with press
					fit crankshaft adapter and
					crankshaft fan drive pulley,
					8 inches in diameter, for 23
					rib 'K' section v-ribbed
					belt. Must be used with
					Cummins radiator cooling

					and fan drive systems, or
					with customer supplied
					cooling systems. Crank pulley
					has provisions for mounting
					an additional front power
					take-off pulley or take-off
					adapter. For KTA/KTTA50 with
					no restrictions on
					applications, but general
					application is for full
					torque below torque peak.
					Pitch circle diameter of
					crank attachment holes is
					3.050 inches.
	1	3069776	Crankshaft Adapter	1	
	2	3031737	Crankshaft Pulley	1	
	3	3628649	Viscous Vibration Damper	1	Yellow new improved 12 pad
	4	3628650	Viscous Vibration Damper	1	Blue new improved 12 pad
	5	3033629	Roll Pin	1	
	6	3069779	Fracture Resistant Screw	8	3/4 - 16 X 4 Inch.
	7	3069781	Crankshaft Spacer	1	
	8	131584	Roll Pin	1	
	9	3033627	Plain Washer	8	1/2 Inch.
	10	3033630	Hexagon Flange Head Cap Screw	8	9/16 - 18 X 4 7/16 Inch.
	11	S 169	Hexagon Head Cap Screw	3	1/2 - 13 x 1 in.
	12	S 608	Lock Washer	3	1/2 in.
	13	3036115	Protective Cover	1	

© 2017 Cummins Inc., Box 3005, Columbus, IN 47202-3005 U.S.A.
Terms of Use and Disclaimers | Recommended System Requirements
Need Assistance? Please click on the Contact Us button in the top right corner of any page.

Parts Catalog - Option Detail

Electronic Parts Catalog - Option Detail				
Option	**Group**	**Graphic**	**Film Card**	**Date**
PP2354-04	07.05.1	pp613go	K50	07-JUL-15
Engines	G50, K50, K50-DPM, QSK50 CM2150 K107, QSK50 CM2150 MCRS, QSK50 CM2350 K108, QSK50 CM850 MCRS, QSK50 DF CM850/CM2150 MCRS			

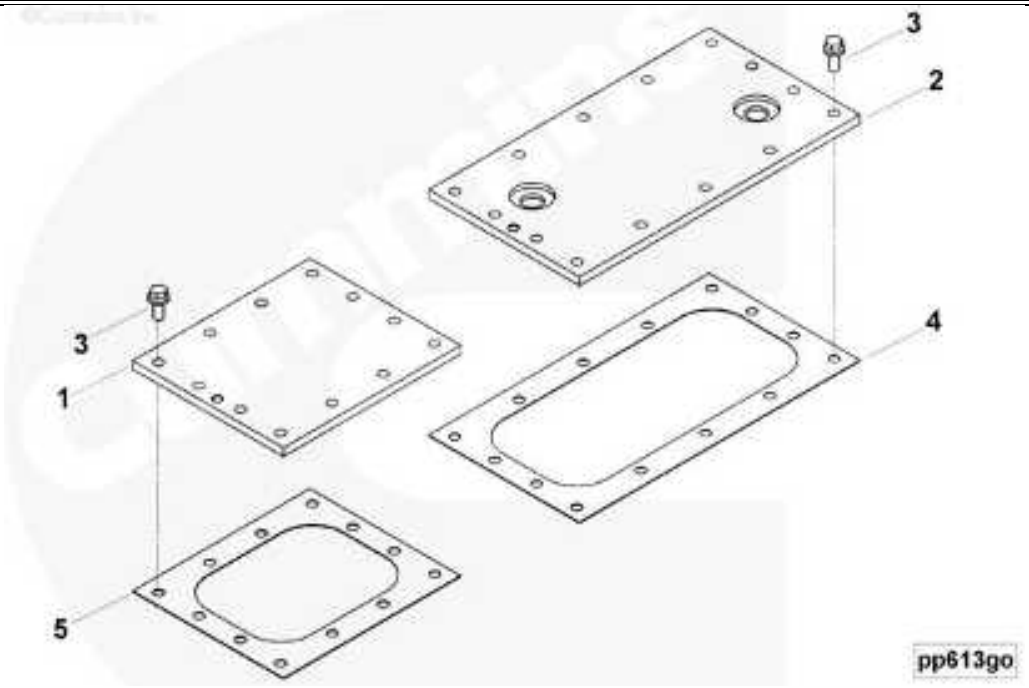

SMALL | MEDIUM | LARGE

Cart	Ref No	Part Number	Part Description	Required	Remarks
View My Cart					
		PP2354-04	Water Header		Water Header...(More)
					Certified Model Name:
					KTA50-G8
					CPL: 2354
					Certified By: None
					Engine Aspiration:
					Turbocharger
					Application: Power Generation
					Power Rating: Intermittent
					KTA-50G8 With LTA K-2000
					Technology.
					Less Water Pumps.
					For Standby, Prime and
					Continuous Applications.

	1	3648233	Water Header Cover	1	
	2	3648236	Water Header Cover	4	
		4347387	Water Header Cover	4	
	3	3011715	Captive Washer Cap Screw	14	3/8 - 16 X 1 3/16 in.
	4	5278644	Water Header Cover Gasket	1	
		4347388	Water Header Cover	1	
	3	3011715	Captive Washer Cap Screw	12	3/8 - 16 X 1 3/16 in.
	5	5278643	Water Header Cover Gasket	1	

© 2017 Cummins Inc., Box 3005, Columbus, IN 47202-3005 U.S.A.
Terms of Use and Disclaimers | Recommended System Requirements
Need Assistance? Please click on the Contact Us button in the top right corner of any page.

Parts Catalog - Option Detail

Electronic Parts Catalog - Option Detail				
Option	**Group**	**Graphic**	**Film Card**	**Date**
WI6002-06	08.07.1	wi602gy	K50	17-NOV-14
Engines	G50, K50, K50-DPM, QSK50 CM2150 K107, QSK50 CM2150 MCRS, QSK50 CM2350 K108, QSK50 CM850 MCRS, QSK50 DF CM850/CM2150 MCRS			

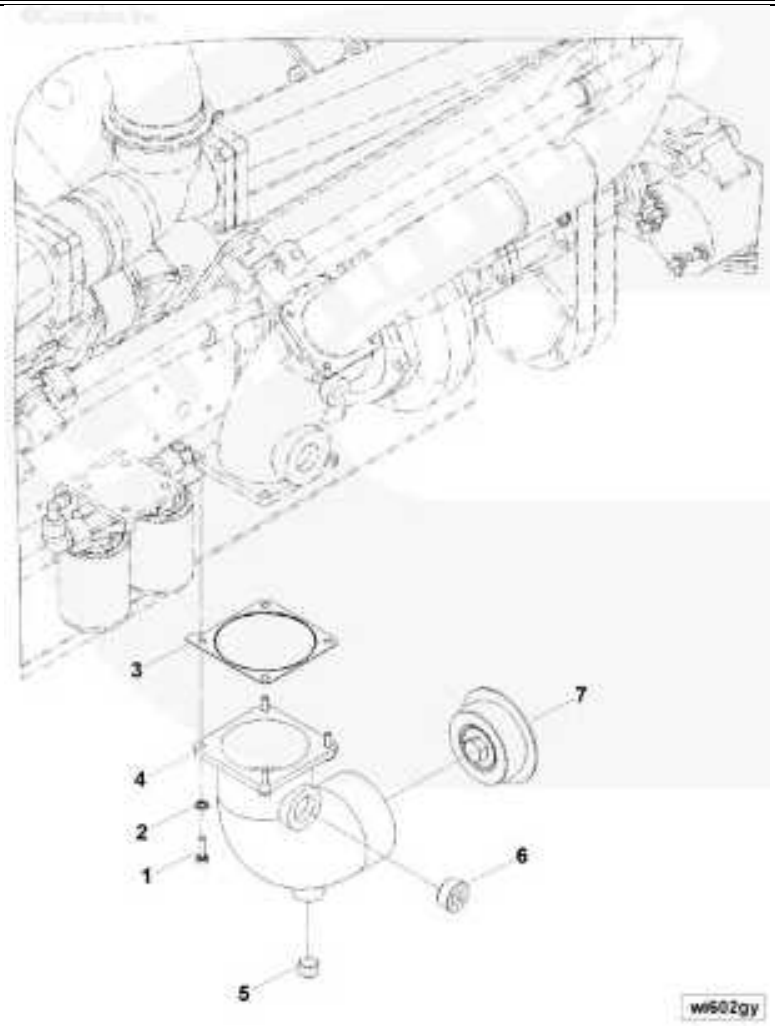

SMALL | MEDIUM | LARGE

Cart	Ref No	Part Number	Part Description	Required	Remarks
View My Cart					
		WI6002-06	Water Inlet Connection		Water Inlet Connection...(More)
					Inlet Connection Type:
					90 Degree
					Inlet Connection OD (mm):
					127 (5.0 in)
					Engine Interface: 4 Bolt
					Flange

					Supply Method: Mounted
	1	S 103 D	Hexagon Head Cap Screw	4	3/8 - 16 x 1 1/4 in.
	2	S 604	Lock Washer	4	3/8 in.
	3	3649463	Water Transfer Connection Gasket	1	
	4	207538	Water Inlet Connection	1	
	5	3628607	Pipe Plug	1	3/4-14.
	6	S 907		1	
	7	4100771	Orifice Plug	1	

© 2017 Cummins Inc., Box 3005, Columbus, IN 47202-3005 U.S.A.
Terms of Use and Disclaimers | Recommended System Requirements
Need Assistance? Please click on the Contact Us button in the top right corner of any page.

Parts Catalog - Option Detail

Electronic Parts Catalog - Option Detail				
Option	**Group**	**Graphic**	**Film Card**	**Date**
WM6016-05	08.07.1	wm600gf	K50	21-JUL-14
Engines	G50, K50, K50-DPM, QSK50 CM2150 K107, QSK50 CM2150 MCRS, QSK50 CM2350 K108, QSK50 CM850 MCRS, QSK50 DF CM850/CM2150 MCRS			

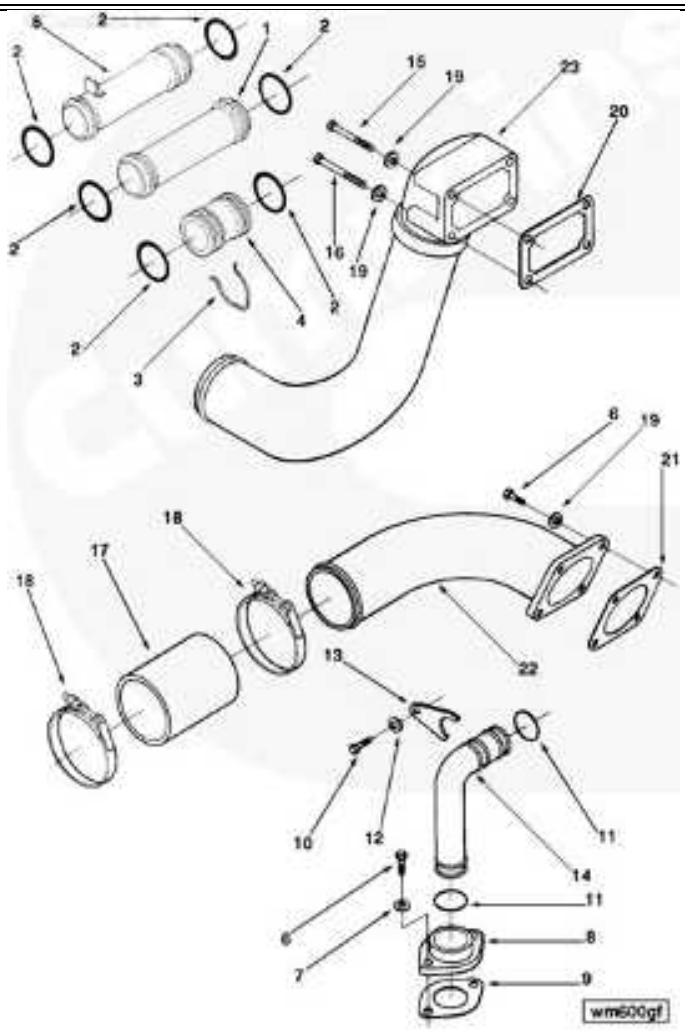

SMALL | MEDIUM | LARGE

Cart	Ref No	Part Number	Part Description	Required	Remarks
View My Cart					
		WM6016-05	Water Manifold		Water transfer tubes for use...(More)
					with dry exhaust manifolds.
					For KTTA50-C (2000).
☐	1	206709	Water Transfer Tube	14	
☐	2	3028291	O-Ring Seal	28	
☐	3	205976	Retaining Ring	1	
☐	4	3002956	Water Transfer Tube	1	

	2	3028291	O-Ring Seal	4	
	5	3642036	Water Transfer Tube	1	
	6	S 103 D	Hexagon Head Cap Screw	6	3/8 - 16 x 1 1/4 in.
	7	3036460	Spring Washer	2	
	8	3054518	Water Transfer Connection	1	
	9	3175517	Flange Gasket	1	
	10	S 109	Hexagon Head Cap Screw	1	3/8 - 16 x 7/8 in.
	11	3175545	O-Ring Seal	2	
	12	3036460	Spring Washer	1	
	13	3054519	Tube Brace	1	
	14	3628967	Water Transfer Tube	1	
	15	S 102 D	Hexagon Head Cap Screw	2	3/8 - 16 x 3 in.
	16	S 105	Hexagon Head Cap Screw	2	3/8 - 16 X 3 1/2 in.
	17	60985	Plain Hose	1	
	18	3633972	T-Bolt Clamp	2	
	19	3036460	Spring Washer	8	
	20	3049368	Connection Gasket	1	
	21	3050944	Flange Gasket	1	
	22	3055710	Water Bypass Tube	1	
	23	3055712	Water Bypass Connection	1	

© 2017 Cummins Inc., Box 3005, Columbus, IN 47202-3005 U.S.A.
Terms of Use and Disclaimers | Recommended System Requirements
Need Assistance? Please click on the Contact Us button in the top right corner of any page.

Parts Catalog - Option Detail

Electronic Parts Catalog - Option Detail				
Option	**Group**	**Graphic**	**Film Card**	**Date**
WO6051-07	08.07.1	null	K50	28-MAR-16
Engines	G50, K50, K50-DPM, QSK50 CM2150 K107, QSK50 CM2150 MCRS, QSK50 CM2350 K108, QSK50 CM850 MCRS, QSK50 DF CM850/CM2150 MCRS			

Cart	Ref No	Part Number	Part Description	Required	Remarks
View My Cart					
		WO6051-07	Water Outlet Connection		Water Outlet Connection
		3630372	Hose Vent	1	
☐		AS 4057 SS	Flexible Hose	1	
☐		S 109	Hexagon Head Cap Screw	4	3/8 - 16 X 7/8 in.
☐		S 604	Lock Washer	4	3/8 in.
☐		69461	Male Connector	2	
☐		108722	Clip	5	
☐		109895	Oil Tube Bracket	2	
☐		2870393	Flexible Hose	1	
☐		3013786	Pipe Plug	1	3/8 NPT.
☐		3175058	Clip	7	
☐		3201128	Regular Hexagon Nut	4	3/8 - 16 UNC.
☐		3626660	Male Union Cross	1	
☐		3628902	Plain Washer	4	
		3633051	Thermostat And Support Assembly Housing	1	
☐		S 103 D	Hexagon Head Cap Screw	8	3/8 - 16 X 1 1/4 in.
☐		S 106 C	Hexagon Head Cap Screw	2	3/8 - 16 X 4 3/4 in.
☐		S 141 C	Hexagon Head Cap Screw	4	3/8 - 16 X 6 3/4 in.
☐		S 197	Hexagon Head Cap Screw	6	3/8 - 16 X 4 1/4 in.
☐		3036460	Spring Washer	20	
☐		3049364	Connection Gasket	2	
☐		3052906	Thermostat Housing Gasket	1	
☐		3052907	Water Transfer Connection	1	
☐		3052908	Water Transfer Connection Gasket	1	
☐		3060889	Thermostat Housing	1	
☐		3349225	Thermostat	1	

		3627961	Thermostat Seal	5	
		3628604	Pipe Plug	1	1/8 - 27 X 0.3 in.
		3628606	Pipe Plug	5	1/2 - 14.
		3628607	Pipe Plug	2	3/4-14.
		3628968	Thermostat Housing Support	1	
		3629205	Thermostat	4	
		3629729	Water Tube Bracket	1	
		3630248	Water Outlet Connection	2	

© 2017 Cummins Inc., Box 3005, Columbus, IN 47202-3005 U.S.A.
Terms of Use and Disclaimers | Recommended System Requirements
Need Assistance? Please click on the Contact Us button in the top right corner of any page.

Parts Catalog - Option Detail

Electronic Parts Catalog - Option Detail				
Option	**Group**	**Graphic**	**Film Card**	**Date**
WO6705	08.07.1	wo602ga	K50	14-MAY-01
Engines	G50, K50, K50-DPM, QSK50 CM2150 K107, QSK50 CM2150 MCRS, QSK50 CM2350 K108, QSK50 CM850 MCRS, QSK50 DF CM850/CM2150 MCRS			

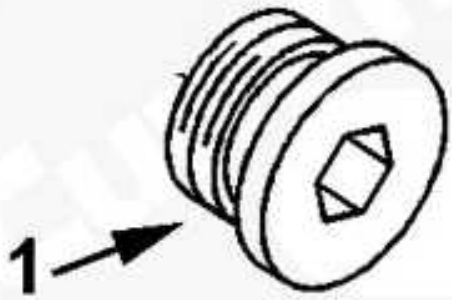

wo602ga

SMALL | MEDIUM | LARGE

Cart	Ref No	Part Number	Part Description	Required	Remarks
View My Cart					
		WO6705	Water Outlet Connection		Pipe plug...(More)
					To be used when no compressor
					fitted.
☐	1	3628609	Pipe Plug	1	3/8-18.

© 2017 Cummins Inc., Box 3005, Columbus, IN 47202-3005 U.S.A.
Terms of Use and Disclaimers | Recommended System Requirements
Need Assistance? Please click on the Contact Us button in the top right corner of any page.

Parts Catalog - Option Detail

Electronic Parts Catalog - Option Detail				
Option	**Group**	**Graphic**	**Film Card**	**Date**
BP6126-16	08.01	null	K50	01-JUL-16
Engines	G50, K50, K50-DPM, QSK50 CM2150 K107, QSK50 CM2150 MCRS, QSK50 CM2350 K108, QSK50 CM850 MCRS, QSK50 DF CM850/CM2150 MCRS			

Cart	Ref No	Part Number	Part Description	Required	Remarks
View My Cart					
		BP6126-16	Water Pump		Water Pump
		MP 5267	Water Pump Connection	1	
		S 604	Lock Washer	2	3/8 in.
		S 907 A	Pipe Plug	1	1 1/4 NPT.
		108330	Plain Washer	4	3/8 in.
		108707	Hexagon Head Cap Screw	2	3/8 - 16 X 1 1/2 in.
		206457	O-Ring Seal	1	
		3010596	Captive Washer Cap Screw	4	3/8 - 16 X 1 1/4 in.
		3175857	Water Pump Support	1	
		3628605	Pipe Plug	2	
		3628606	Pipe Plug	1	
		MP 5273	Water Pump Mounting Support	1	
		S 162 A	Hexagon Head Cap Screw	3	7/16 - 14 X 2 3/4 in.
		S 610	Lock Washer	4	7/16 in.
		103009	Hexagon Head Cap Screw	1	7/16 - 14 X 1 1/4 in.
		206416	Support Gasket	1	
		MP 5274	Water Mounting Pump	1	
		S 604	Lock Washer	4	3/8 in.
		S 610	Lock Washer	4	7/16 in.
		103009	Hexagon Head Cap Screw	4	7/16 - 14 X 1 1/4 in.
		199919	Twelve Point Cap Screw	4	3/8 - 16 X 1 1/2 in.
		206193	Water Pump Gasket	1	
		206455	Water Pump Gasket	1	
		3007512	O-Ring Seal	1	
		3640685	O-Ring Adapter	1	
		3050945	Water Inlet Connection	1	

		3634065	Water Pump Support	1	
		3628639	Water Pump Shaft	1	
		68193	Pipe Plug	1	1/8 NPT.
		3627723	Shaft Retainer	1	
		3628187	Water Pump Shaft	1	
		3631805	Pipe Plug	1	
		3634019	Expansion Plug	1	
		3634066	Water Pump Support	1	
		3629855	Bushing	2	
		3631805	Pipe Plug	1	
		3634067	Water Pump Support	1	
		4953334	Water Pump Gear	1	
		4372339	Water Pump	1	
		S 16054	Ball Bearing	1	
		S 16069	Ball Bearing	1	
		70183	Retaining Ring	1	
		206195	Spline Coupling Sleeve	1	
		206196	Retaining Ring	1	
		3004259	Expansion Plug	1	
		3008466	Pipe Plug	1	1/4 NPT.
		3030487	Bearing Spacer	1	
		3050454	Water Pump Impeller	1	
		3175573	Retaining Ring	1	
		3634007	Water Pump Seal	1	
		3638582	Draincock	1	
		3643960	Oil Seal	1	
		3643961	Water Pump Shaft	1	
		4372333	Water Pump Body	1	
		3678921	Threaded Plug	1	
		3678912	O-Ring Seal	1	
		3678922	Threaded Plug	1	
		4376118	Water Pump Kit	A/R	
		206193	Water Pump Gasket	1	
		206455	Water Pump Gasket	1	
		206457	O-Ring Seal	1	
		3007512	O-Ring Seal	1	

		3252438	Tube Connector	1	
		3650016	Water Drain Tube	1	
		4372339	Water Pump	1	

© 2017 Cummins Inc., Box 3005, Columbus, IN 47202-3005 U.S.A.
Terms of Use and Disclaimers | Recommended System Requirements
Need Assistance? Please click on the Contact Us button in the top right corner of any page.