6316697718

# Parts Catalog

# KT19

VME
L270
L270B

## THE FOLLOWING FILTERS CAN BE PURCHASED THRU VME PARTS NORTH AMERICA:

| FILTER | PART NUMBER |
|---|---|
| FUEL | 12003653 |
| LUBE | 12000200 |
| LUBE-BYPASS | 11996228 |
| WATER-FOR FLUSHING | 12967020 |
| WATER-FOR SERVICING | 12968028 |

# Cummins Engine Co., Inc.

## New Parts Warranty
### Heavy Duty

## COVERAGE

**PRODUCTS WARRANTED**

These warranties apply to New Parts marketed by Cummins for its engines (except those for A, B, and C series engines). They apply anywhere in the world where service is available through a Cummins distributor or full service dealer.*

**BASE WARRANTY**

The Base Warranty covers any failures of parts on or after March 31, 1986, which result, under normal use and service, from defects in workmanship or material (Warrantable Failures). The coverage on cylinder kits designated by Cummins as "Premium Plus" extends two years, 200,000 miles (321,870 kilometers) or 7,200 hours of operation, whichever occurs first, from the date of first installation. The coverage on other parts extends one year, 100,000 miles (160,935 kilometers) or 3,600 hours of operation, whichever occurs first, from the date of first installation.

**EXTENDED MAJOR COMPONENTS WARRANTY**

The Extended Major Components Warranty covers Warrantable Failures on or after March 31, 1986, of engine cylinder blocks, crankshafts, flangeless NT camshafts** and connecting rods (Covered Parts). Bushing and bearing failures are not included. This coverage begins with the expiration of the Base Warranty and ends three years, 300,000 miles (482,805 kilometers) or 10,800 hours of operation, whichever occurs first, from the date of first installation.

**Both the Base Warranty and Extended Major Components Warranty apply to all Owners in the chain of distribution, and coverage continues to all subsequent Owners until the end of the respective periods of coverage.**

## CUMMINS RESPONSIBILITIES

**DURING THE BASE WARRANTY**

Cummins will pay for all parts and labor needed to repair the damage to the engine resulting from the Warrantable Failure. All labor costs will be paid in accordance with Cummins published Standard Repair Operation guidelines.

Cummins will pay for the lubricating oil, antifreeze, filter elements, and other maintenance items that are not reusable due to the Warrantable Failure.

Cummins will pay reasonable labor costs for engine removal and reinstallation when necessary to make the warranty repair.

When the parts are installed in a non-automotive engine, Cummins will pay reasonable travel expenses for mechanics to and from the engine site, or the repair dock in the case of a marine engine, including meals, mileage and lodging when it is necessary for mechanics to make on-site warranty repairs.

**DURING THE EXTENDED MAJOR COMPONENTS WARRANTY**

Cummins will pay for the Covered Part and for any Covered Part damaged by a Warrantable Failure of another Covered Part.

## OWNER RESPONSIBILITIES

**DURING THE BASE WARRANTY**

Before expiration of the warranty, Owner must give notice to a Cummins distributor or full service dealer* of a failure considered to be warrantable and have the repair performed by such facility.

If the part was installed in an automotive engine, the Owner must deliver the engine to the repair location. If installed in a marine engine, Owner is responsible for the cost of towing the boat to a repair dock and for any associated docking and harbor charges.

Owner is responsible for the cost of lubricating oil, antifreeze, filter elements and other maintenance items replaced during warranty repairs except where such items are not reusable due to a Warrantable Failure.

**DURING THE EXTENDED MAJOR COMPONENTS WARRANTY**

Before expiration of the warranty, Owner must give notice to a Cummins distributor or full service dealer* of a failure considered to be warrantable and deliver the defective and damaged Covered Parts to such facility.

Owner Is responsible for the cost of all parts needed for the repair except for the defective Covered Part and for any Covered Part damaged by a Warrantable Failure of another Covered Part.

Owner is responsible for the cost of all labor needed to repair the engine, including the labor to remove and reinstall the engine. When Cummins elects to repair a part instead of replacing it, Owner is not responsible for the labor needed to repair the part.

Owner is responsible for the cost of lubricating oil, antifreeze, filter elements and other maintenance items replaced during the repair.

**DURING BOTH WARRANTIES**

At the time when the parts are installed, Owner is responsible for the preparation of a written record containing the following: (1) the date of installation of the parts; (2) the engine serial number; (3) the engine miles, hours or kilometers of operation; (4) the parts installed, and (5) the location of the parts in the engine. The purpose of this record is to protect Owner's interests and support any claim for a Warrantable Failure.

Owner is responsible for the operation and maintenance of the engine as specified in Cummins Operation and Maintenance Manuals.

Owner is responsible for communication expenses, meals, lodging and similar costs incurred by Owner as a result of a Warrantable Failure. Owner is responsible for non-engine repairs and for "down time" expenses, cargo damage and all business costs and losses resulting from a Warrantable Failure. CUMMINS IS NOT RESPONSIBLE FOR INCIDENTAL OR CONSEQUENTIAL DAMAGES.

## LIMITATIONS

Cummins is not responsible for failures resulting from Owner or Operator abuse or neglect, such as: operation without adequate coolant, fuel or lubricants; overfueling; overspeeding; lack of maintenance of lubricating, cooling or air intake systems; improper storage, starting, warm-up, run-in or shutdown practices. Cummins is also not responsible for failures caused by incorrect fuel, or by water, dirt or other contaminants in the fuel.

Cummins does not warrant parts supplied by Cummins which bear the name of another company. These parts are warranted by their manufacturers and not by Cummins. This category of parts includes, but is not limited to: hydraulic pumps, alternators, starters, fans, air conditioning compressors, clutches, steering pumps, transmissions, torque converters, marine gears, air cleaners, filters and non-Cummins air compressors, power steering pumps, and engine compression brakes.

Parts provided may be new Cummins, Cummins approved rebuilt parts, or repaired parts. Cummins is not responsible for failures resulting from the use of parts not approved by Cummins.

Before a claim for excessive oil consumption will be considered, Owner must submit adequate documentation to show that consumption exceeds Cummins published standards.

This warranty does not apply to parts furnished by Cummins at no charge to the Owner.

INVEST IN THE BEST

# Product Identification Information

Data plates should be referred for parts identification.

1. ENGINE DATA PLATE

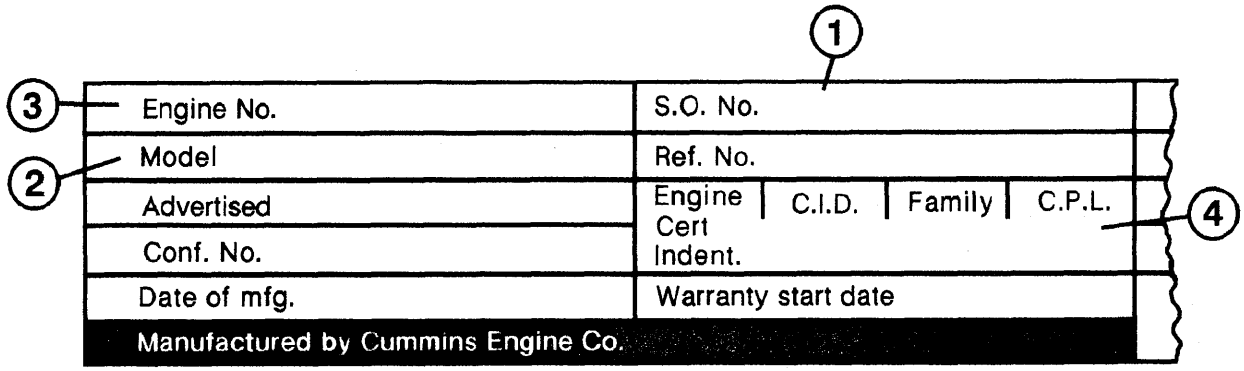


1. Shop order number
2. Model designation
3. Engine serial number
4. Control parts list

2. FUEL PUMP DATA PLATE

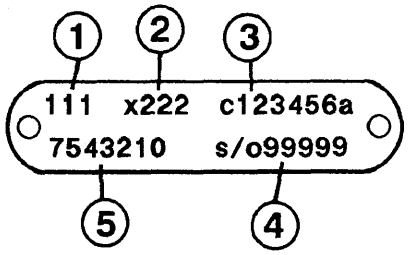


1. Control parts list number
2. Calibration code
3. Serial number
4. Top level number
5. Fuel pump assembly number

**This catalog was compiled by Garry Wilber in Parts Communications.**

# Customer Service Information

This standard Parts Catalog contains parts information for the following Cummins Engine Model(s):

| | | | |
|---|---|---|---|
| KT19C | D192027CX02 | CPL 444 | S.O. 68887 |

Certain basic engine components have been matched to give optimum performance to your engine. The part numbers listed in this catalog for these components are for a standard engine configuration. When ordering any of the Control Parts List (CPL) components listed below, please order by part description and engine serial number. Reference to the CPL number stamped on the engine data (name) plate will also help identify the proper service parts for your engine.

## Control Parts List (CPL) Components


| | | | |
|---|---|---|---|
| **Camshaft** | Page 61 | **Piston, engine** | Page 60 |
| **Cylinder Head** | Page 69 | **Turbocharger** | Page 65 |
| **Injector** | Page 63 | **Exhaust, manifold** | Page 75 |


## USER INFORMATION

- **Parts numbers appearing in ( ) are for identification purposes only and should not be used when ordering service replacement parts.**
- **The reference numbers appearing on the art pages is for publication use only.**
- **Assembly content is shown by part number indentation.**
- **Options are engineered production part groupings, specifically used for compiling engine orders.**
- **Option numbers are for reference only and are not sold for service.**
- **Use assembly and not option content to determine service parts replacement.**

## ALWAYS SPECIFY ENGINE MODEL AND SERIAL NUMBER WHEN ORDERING PARTS FROM THIS CATALOG

Engine Model _____ Engine Serial No. _____

MFG Make _____ Model _____ Chassis No. _____

Fuel Pump Assembly No. _____ Injector No. _____

Belt, Fan _____ Belt, Water Pump _____ Belt, Gen. _____

Element, Fuel Filter _____ Full Flow Lub. Filter _____

Air Cleaner _____ By-Pass Lub. Filter _____

Special Equipment

_____

_____

_____

# Table of Contents


| | Page No. |
|---|---|
| Accessory Drive | 3 |
| Accessory Drive Pulley | 2 |
| Alternator Mounting | 25 |
| Breather Location | 21 |
| Cam Follower | 15 |
| Camshaft And Gear | 61 |
| Camshaft Idler Gear | 8 |
| Corrosion Resistor | 82 |
| Cover Plate | 47 |
| Crankshaft & Main Bearings | 11 |
| Cylinder Block | 5, 7 |
| Cylinder Head | 69 |
| Cylinder Head Mounting | 67 |
| Dipstick | 54 |
| Dipstick Tube | 52 |
| Exhaust Elbow | 90 |
| Exhaust Manifold/turbo Mtg | 75 |
| Fan Drive Arrangement | 30 |
| Flywheel | 44 |
| Flywheel Housing | 35 |
| Front Engine Support | 27 |
| Fuel Filter | 33 |
| Fuel Pump | 39 |
| Fuel Pump Drive | 38 |
| Fuel Shutoff Valve | 43 |
| Fuel Tubing | 41 |
| Gear Cover Mounting | 29 |
| Hand Hole Covers | 53 |
| Head Gasket Set - Single | 92 |
| Injector | 63 |
| Injector Mounting | 18 |
| Intake Manifold | 48, 49 |
| Intake Manifold Mounting | 50 |
| Lifting Arrangement | 70 |
| Lubricating Oil Pump | 17 |
| Mag Pickup Location Plug | 36 |
| Mounting | 61 |
| Oil Cooler | 79 |
| Oil Cooler Connection | 80 |
| Oil Fill Location | 37 |
| Oil Filter | 51 |
| Oil Pan | 57, 59 |
| Oversize Head Gasket | 67 |
| Piston & Connecting Rod | 60 |
| Pump Idler | 8 |
| Rocker Levers | 13 |
| Starter | 72 |
| Starter Mounting | 71 |
| Throttle Lever | 81 |
| Turbocharger | 65 |
| Turbocharger Mounting | 76 |
| Vibration Damper | 22 |
| Water Inlet Connection | 83 |
| Water Manifold | 85 |
| Water Outlet Connection | 86 |
| Water Pump | 89 |
| Option Number Index | A-1 |
| Part Number Index | B-1 |

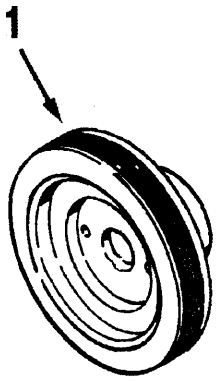


ad400gh

| Ref No. | Part Number | Part Name | Req | Remarks |
|---|---|---|---|---|
| | | **ACCESSORY DRIVE PULLEY** | | |
| | | **OPTION AD4007** | | Pulley to drive alternator. Right side of engine. For use with the one piece aluminum gear cover. |
| 1 | 3002331 | Pulley, Alternator | 1 | |

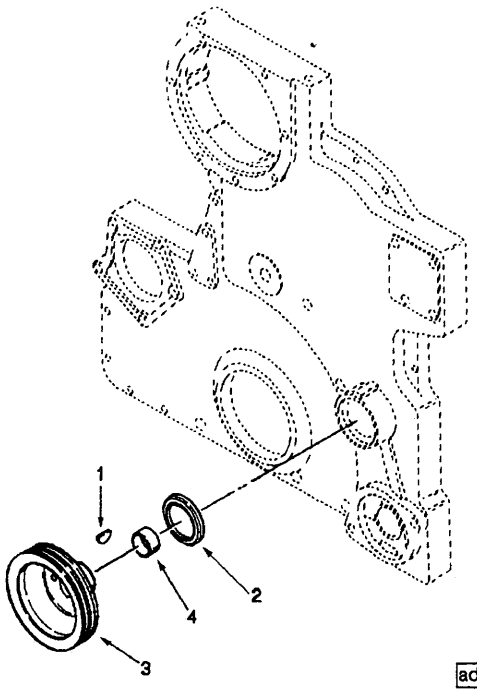


| Ref No. | Part Number | Part Name | Req | Remarks |
|---|---|---|---|---|
| | | **ACCESSORY DRIVE** | | |
| | | **OPTION AD4014** | | Accessory drive with two groove pulley to drive freon compressor. Fuel pump side of engine. Use with CF4004. |
| 1 | S-316 | Key, Plain Woodruff | 1 | |
| 2 | 3200287 | Seal, Keyway | 1 | |
| | 3014695 | Pulley, Accessory Drive | 1 | |
| 3 | (3011826) | Pulley, Accessory Drive | 1 | |
| 4 | 190397 | Sleeve, Wear | 1 | |

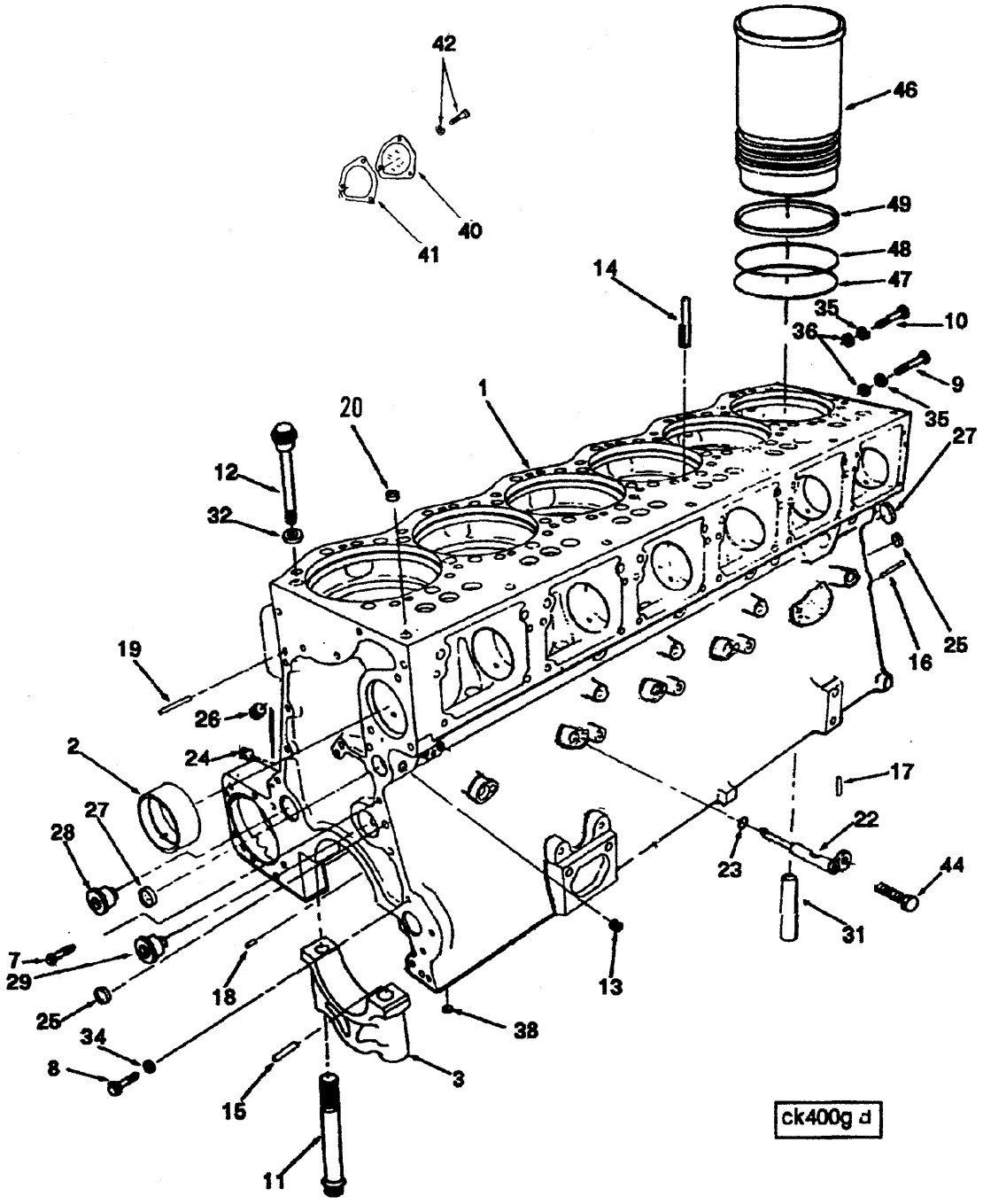
42
46
40
49
41
48
14
47
35
10
36
9
1
20
35
27
12
32
25
19
16
26
2
24
17
27
28
22
23
44
7
31
29
18
13
25
38
34
8
3
15
ck400g d
11

| Ref No. | Part Number | Part Name | Req | Remarks |
|---|---|---|---|---|
| | | **CYLINDER BLOCK** | | |
| | | **OPTION BP4010** | | Cylinder block less rear gear train for KT(A)-1150 C,L,P,G configurations. Use with EM4058 thru EM4065. Gear cover plate design. |
| | 3060545 | Block, Cylinder | 1 | |
| 1 | (3045960) | Block, Cylinder | 1 | |
| 2 | 3002834 | Bushing | 7 | |
| 3 | 205021 | Cap, Main Bearing | 4 | No. 2, 3, 4, & 5 |
| 3 | 205022 | Cap, Main Bearing | 1 | No. 1 |
| 3 | 205023 | Cap, Main Bearing | 1 | No. 6 |
| 3 | 205075 | Cap, Main Bearing | 1 | No. 7 |
| 7 | 3014766 | Screw, Captive Washer Cap | 9 | 3/8 - 16 x 1 inch |
| 8 | 191772 | Screw, Twelve Point Cap | 2 | 3/8 - 16 x 1 1/4 inches |
| 9 | S-127-C | Screw, Hexagon Head Cap | 10 | 5/8 - 11 x 1 3/4 inches |
| 10 | S-103-A | Screw, Hexagon Head Cap | 2 | 5/8 - 11 x 2 inches |
| 11 | 3025482 | Screw, Twelve Point Cap | 14 | 1 - 14 x 7 13/16 inches |
| 12 | 3032633 | Screw, Twelve Point Cap | 36 | 3/4 - 16 x 7 29/32 inches |
| 13 | 3025460 | Plug, Pipe | 1 | 1/8 inch |
| 14 | 68445 | Pin, Groove | 12 | |
| 15 | 60408-L | Dowel, Pin | 1 | |
| 16 | 9226 | Dowel, Flywheel Hsg | 2 | |
| 17 | 67211 | Dowel, Rear Main Bearing | 2 | #6 main bearing |
| 18 | 124921 | Dowel | 2 | Crankshaft thrust bearing |
| 19 | 205366 | Dowel, Diamond | 1 | |
| 20 | 3007632 | Plug, Expansion | 7 | |
| 22 | 3007517 | Nozzle, Piston Cooling | 6 | |
| 23 | 3015067 | Seal, O Ring | 6 | |
| 24 | 3025460 | Plug, Pipe | 1 | 1/8 inch |
| 25 | 147416 | Plug, Expansion | 2 | Piston cooling rifle |
| 26 | 3008470 | Plug, Pipe | 1 | 1 inch |
| 27 | 175830 | Plug, Expansion | 2 | Main oil rifle |
| 28 | 3202114 | Shaft, Idler | 1 | Water pump |
| 29 | 3202114 | Shaft, Idler | 1 | Camshaft |
| 31 | 205298 | Tube, Lub Oil Transfer | 1 | |
| 32 | 205059 | Washer, Plain | 36 | |
| 34 | 127362 | Washer, Plain | 2 | |
| 35 | S-603 | Washer, Lock | 12 | |
| 36 | S-658 | Washer, Plain | 12 | |
| 38 | 3025458 | Plug, Pipe | 8 | 1/8 inch |
| 44 | 3033822 | Screw, Captive Washer Cap | 6 | 5/16 - 24 x 3/4 inch |
| 40 | 207373 | Cover, Camshaft | 1 | |
| 41 | 3040722 | Gasket, Camshaft Cover | 1 | |
| 42 | 3014766 | Screw, Captive Washer Cap | 3 | 3/8 - 16 x 1 inch |

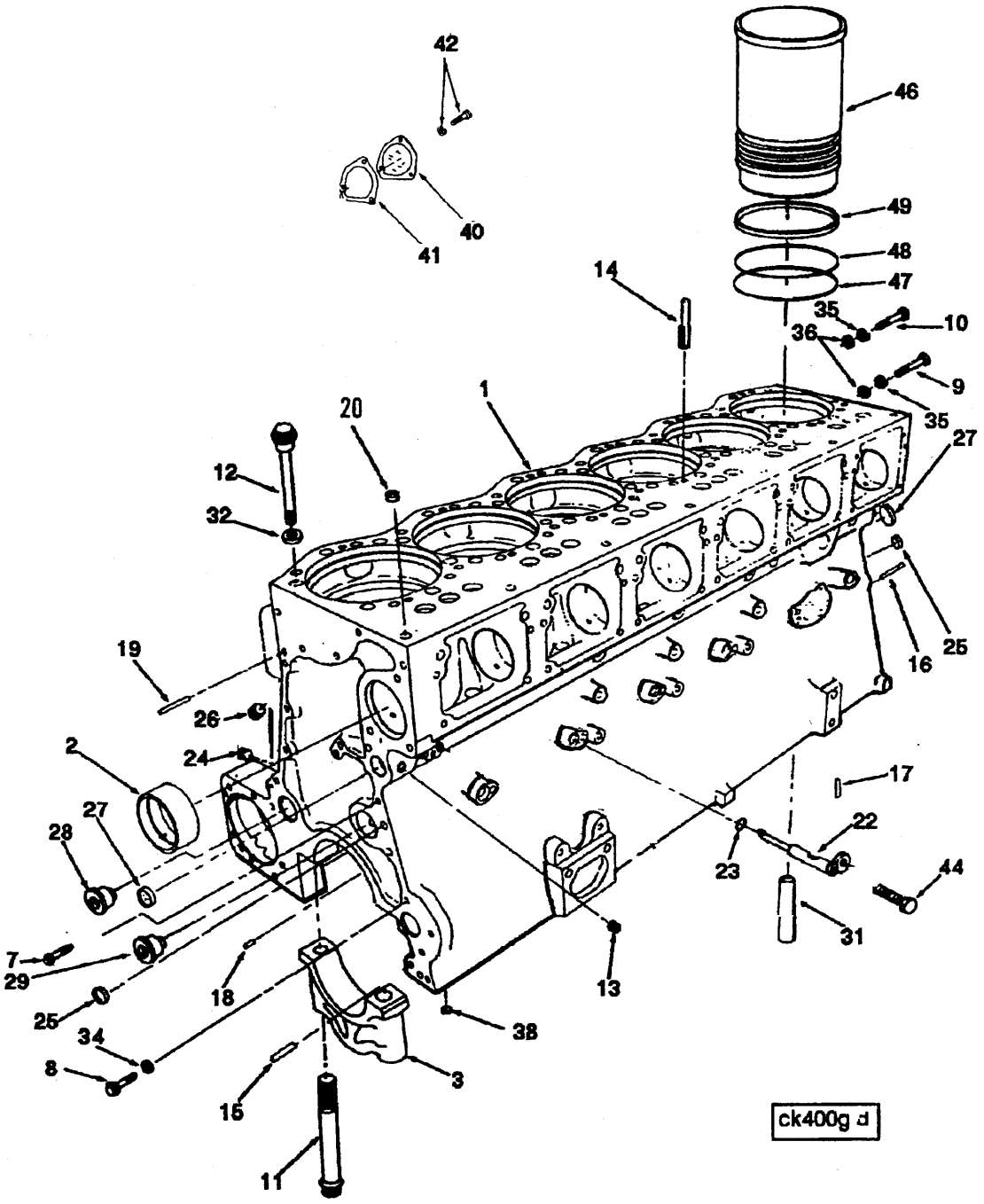
42
46
40
49
41
48
47
14
35
10
36
9
1
20
35
27
12
32
25
16
19
26
2
24
17
27
22
28
23
44
31
7
29
18
13
25
38
34
8
3
15
11
ck400g d

| Ref No. | Part Number | Part Name | Req | Remarks |
|---|---|---|---|---|
| | | **CYLINDER BLOCK** | | |
| | | **OPTION BP4010** | | Cylinder block less rear gear train for KT(A)-1150 C,L,P,G configurations. Use with EM4058 thru EM4065. Gear cover plate design. |
| | | **CYLINDER LINER** | | |
| | 3028434 | Kit, Liner | 6 | |
| 46 | (3202240) | Liner, Cylinder | 1 | |
| 47 | 3014668 | Seal, D Ring | 1 | Bottom (black) |
| 48 | 3011076 | Seal, D Ring | 1 | Top (red) |
| 49 | 205115 | Seal, Crevice | 1 | |
| | | **OVERSIZED LINERS** | | |
| | 3028430 | Kit, Liner | A/R | .020 Inch oversize |
| | 3028431 | Kit, Liner | A/R | .040 Inch oversize |
| | 3028432 | Kit, Liner | A/R | .060 Inch oversize |
| | 3024726 | Kit, Liner | A/R | .083 Inch oversize |
| | 3028433 | Kit, Liner | A/R | .095 Inch oversize |
| | | **LINER SHIMS** | | |
| | 3014226 | Shim | A/R | .007 Inch |
| | 3014227 | Shim | A/R | .008 Inch |
| | 3014228 | Shim | A/R | .009 Inch |
| | 3014229 | Shim | A/R | .020 Inch |
| | 3014230 | Shim | A/R | .031 Inch |

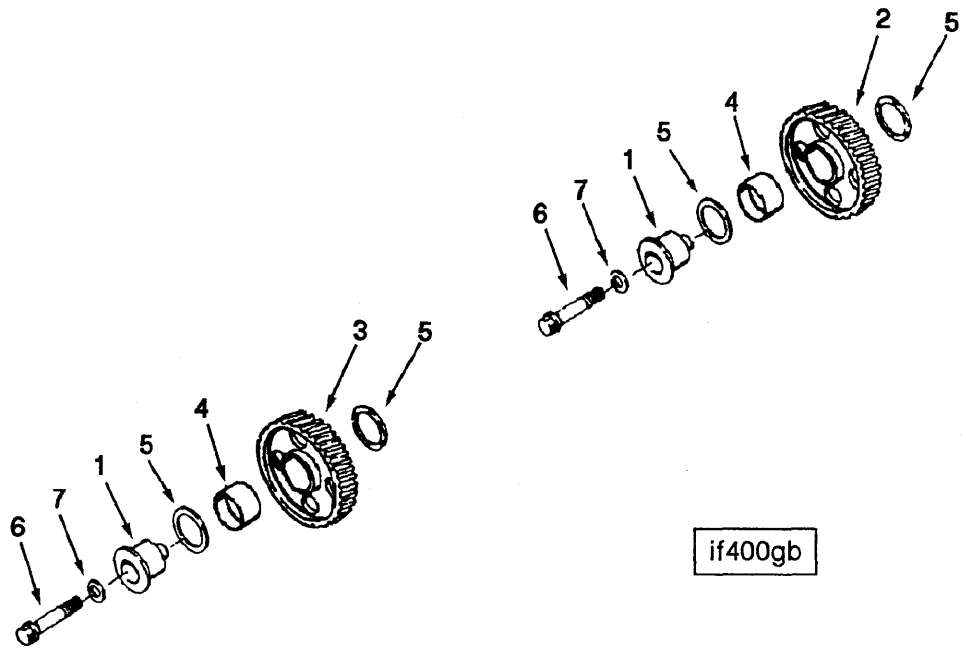


| Ref No. | Part Number | Part Name | Req | Remarks |
|---|---|---|---|---|
| | | **CAMSHAFT IDLER GEAR** | | |
| | | **OPTION BP4010** | | |
| 1 | 3202114 | Shaft, Idler | 1 | |
| | 3004684 | Gear, Bushing Cam Idler | 1 | |
| 2 | (3004599) | Gear, Idler | 1 | |
| 4 | 3004686 | Bushing | 1 | |
| 5 | 130083 | Bearing, Thrust | 2 | |
| 6 | 207527 | Screw, Twelve Point Cap | 1 | 5/8 - 18 x 3 inches |
| 7 | 3200772 | Washer, Plain | 1 | |
| | | **PUMP IDLER** | | |
| | | **OPTION BP4010** | | |
| 1 | 3202114 | Shaft, Idler | 1 | |
| | 3004685 | Gear, Bushing Wtr Pump Id | 1 | |
| 3 | (3004680) | Gear, Idler | 1 | |
| 4 | 3004686 | Bushing | 1 | |
| 5 | 130083 | Bearing, Thrust | 2 | |
| 6 | 207527 | Screw, Twelve Point Cap | 1 | 5/8 - 18 x 3 inches |
| 7 | 3200772 | Washer, Plain | 1 | |

## NOTES

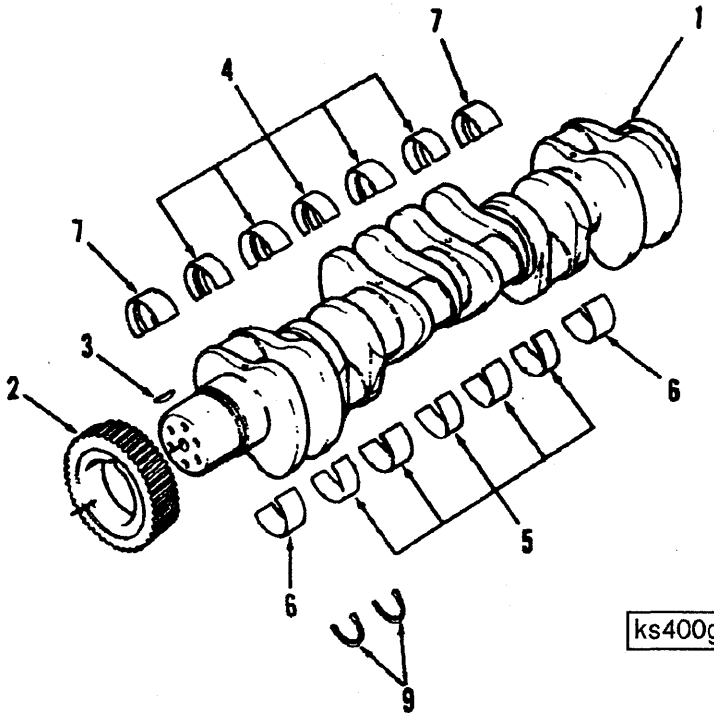
7
1
4
7
7
3
2
6
6
5
9
ks400gd

| Ref No. | Part Number | Part Name | Req | Remarks |
|---|---|---|---|---|
| | | **CRANKSHAFT & MAIN BEARINGS** | | |
| | | **OPTION BP4010** | | |
| | 3005357 | Crankshaft | 1 | |
| 1 | 3201082 | Crankshaft, Engine | 1 | |
| 2 | 207259 | Gear, Crankshaft | 1 | |
| 3 | 206904 | Key, Woodruff | 1 | |
| | AR12270 | Shell, Main Bearing | 1 | Standard |
| 4 | 205140 | Bearing, Main | 5 | No. 2, 3, 4, 5, & 6 - Upper |
| 5 | 205150 | Bearing, Main | 5 | No. 2, 3, 4, 5, & 6 - Lower |
| 6 | 205160 | Bearing, Main | 2 | No. 1 & 7 - Lower |
| 7 | 205170 | Bearing, Main | 2 | No. 1 & 7 - Upper |
| 9 | 205112 | Bearing, Thrust | 4 | |
| | AR12271 | Shell, Main Bearing | A/R | .010 Inch Oversize |
| 4 | 205141 | Bearing, Main | A/R | No. 2, 3, 4, 5, & 6 - Upper |
| 5 | 205151 | Bearing, Main | A/R | No. 2, 3, 4, 5, & 6 - Lower |
| 6 | 205161 | Bearing, Main | A/R | No. 1 & 7 - Lower |
| 7 | 205171 | Bearing, Main | A/R | No. 1 & 7 - Upper |
| 9 | 205112 | Bearing, Thrust | A/R | |
| | AR12272 | Shell, Main Bearing | A/R | .020 Inch Oversize |
| 4 | 205142 | Bearing, Main | A/R | No. 2, 3, 4, 5, & 6 - Upper |
| 5 | 205152 | Bearing, Main | A/R | No. 2, 3, 4, 5, & 6 - Lower |
| 6 | 205162 | Bearing, Main | A/R | No. 1 & 7 - Lower |
| 7 | 205172 | Bearing, Main | A/R | No. 1 & 7 - Upper |
| 9 | 205112 | Bearing, Thrust | A/R | |
| | AR12273 | Shell, Main Bearing | A/R | .030 Inch Oversize |
| 4 | 205143 | Bearing, Main | A/R | No. 2, 3, 4, 5, & 6 - Upper |
| 5 | 205153 | Bearing, Main | A/R | No. 2, 3, 4, 5, & 6 - Lower |
| 6 | 205163 | Bearing, Main | A/R | No. 1 & 7 - Lower |
| 7 | 205173 | Bearing, Main | A/R | No. 1 & 7 - Upper |
| 9 | 205112 | Bearing, Thrust | A/R | |
| | | **THRUST RINGS - OVERSIZE** | | |
| 9 | 3001196 | Bearing, Thrust | A/R | .010 Inch Oversize |
| 9 | 3001197 | Bearing, Thrust | A/R | .020 Inch Oversize |

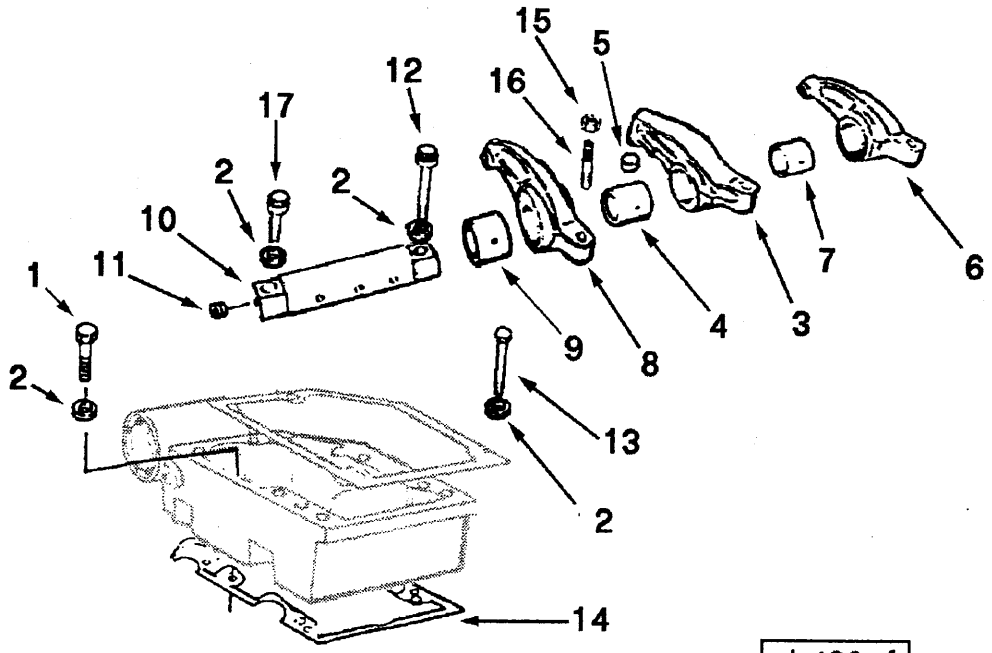
15
5
12
16
17
2
2
10
11
1
2
9
8
4
3
7
6
13
2
14
rh400gf

| Ref No. | Part Number | Part Name | Req | Remarks |
|---|---|---|---|---|
| | | **ROCKER LEVERS** | | |
| | | **OPTION BP4010** | | |
| 1 | S-125 | Screw, Hexagon Head Cap | 6 | 1/2 - 13 x 2 inches |
| 2 | 205128 | Washer, Plain | 48 | |
| | 3053478 | Lever, Rocker | 6 | |
| 3 | (3049437) | Lever, Rocker | 1 | |
| 4 | 207226 | Bushing | 1 | |
| 5 | 194037 | Socket, Rocker Lever | 1 | |
| | 3053476 | Lever, Rocker | 6 | |
| 6 | (3049438) | Lever, Rocker | 1 | |
| 7 | 207344 | Bushing | 1 | |
| | 208084 | Rivet | 1 | |
| | 3053477 | Lever, Rocker | 6 | |
| 8 | (3049432) | Lever, Rocker | 1 | |
| 9 | 207344 | Bushing | 1 | |
| | 208084 | Rivet | 1 | |
| | 3176773 | Shaft, Rocker Lever | 6 | |
| 10 | (3176875) | Shaft, Rocker Lever | 1 | |
| 11 | 203933 | Plug, Expansion | 1 | |
| 12 | 205394 | Screw, Twelve Point Cap | 6 | 1/2 - 13 x 4 1/2 inches |
| 13 | 108602 | Screw, Hexagon Head Cap | 30 | 1/2 - 13 x 3 3/4 inches |
| 14 | 3201517 | Gasket, Rkr Lever Housing | 6 | |
| 15 | S-212 | Nut, Regular Hexagon | 18 | |
| 16 | 168306 | Screw, Slotted Set | 18 | 1/2 - 20 x 2 inches |
| 17 | 205393 | Screw, Twelve Point Cap | 6 | 1/2 - 13 x 2 inches |

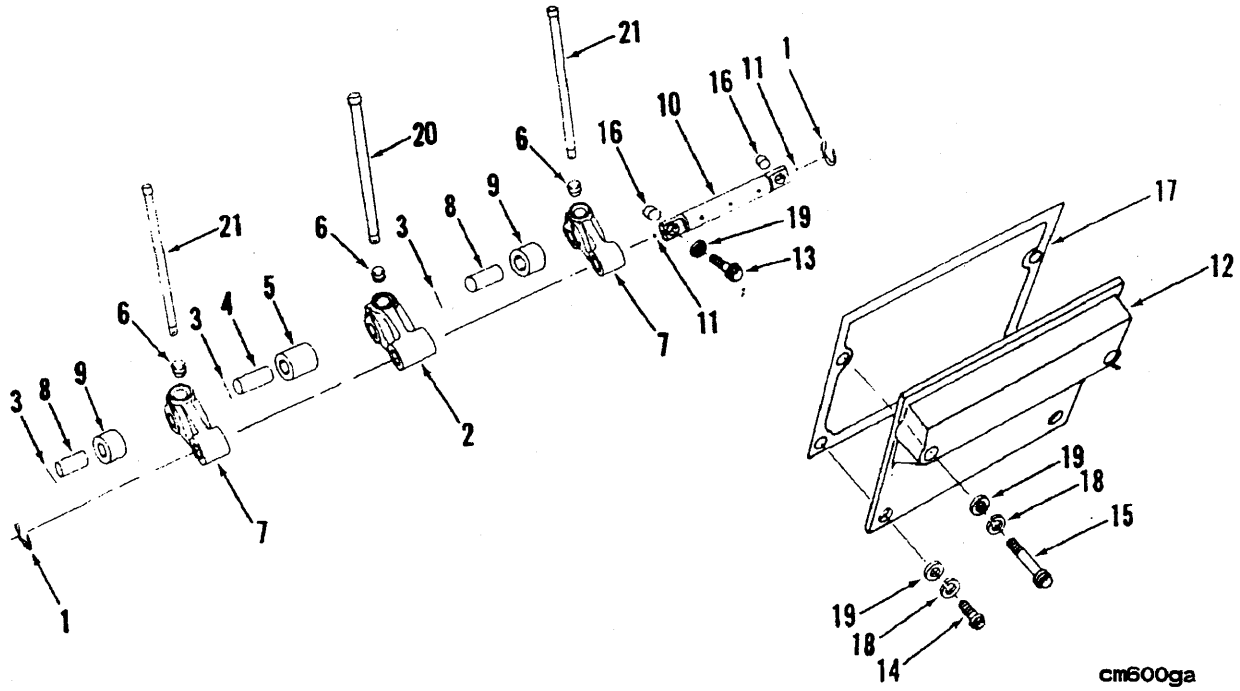
21
1
16
11
10
20
6
16
9
8
3
6
21
19
13
17
12
5
4
3
6
11
7
9
8
3
2
19
18
15
7
1
19
18
14
cm600ga

| Ref No. | Part Number | Part Name | Req | Remarks |
|---|---|---|---|---|
| | | **CAM FOLLOWER** | | |
| | | **OPTION BP4010** | | |
| 1 | 205439 | Ring, Retaining | 12 | |
| | 3039163 | Lever, Cam Follower | 6 | Injector |
| 2 | (206231) | Lever, Cam Follower | 1 | |
| 3 | 205438 | Lockwire, Cam Roller Pin | 1 | |
| 4 | 205068 | Pin, Cam Follower Roller | 1 | |
| 5 | 3016825 | Roller, Cam Follower | 1 | |
| 6 | 213559 | Socket, Cam Follower | 1 | |
| | 3039164 | Lever, Cam Follower | 12 | Valves |
| 3 | 205438 | Lockwire, Cam Roller Pin | 1 | |
| 6 | 213559 | Socket, Cam Follower | 1 | |
| 7 | (205069) | Lever, Cam Follower | 1 | |
| 8 | 205071 | Pin, Cam Follower Roller | 1 | |
| 9 | 3016826 | Roller, Cam Follower | 1 | |
| 10 | AR10626 | Shaft, Cam Follower | 6 | |
| | 205227 | Plug, Expansion | 2 | |
| | 205301 | Shaft, Cam Follower | 1 | |
| 12 | 3009631 | Cover, Camshaft | 4 | |
| | | **MOUNTING PARTS** | | |
| 13 | 3002886 | Screw, Cam Follower Shaft | 12 | 3/8 - 16 x 1.3 inch, special |
| 14 | 3040838 | Screw, Captive Washer Cap | 12 | 3/8 - 16 x 1 inch |
| 15 | 3040837 | Screw, Captive Washer Cap | 12 | 3/8 - 16 x 2 1/2 inches |
| 16 | 3002993 | Dowel, Ring | 12 | |
| 17 | 3040721 | Gasket, Cam Fol Housing | 6 | |
| 18 | S-604 | Washer, Lock | 24 | |
| 19 | 127362 | Washer, Plain | 36 | |
| | | **PUSH RODS** | | |
| 20 | 3017961 | Rod, Push | 6 | Injector |
| 21 | 3057139 | Rod, Push | 12 | Valves |

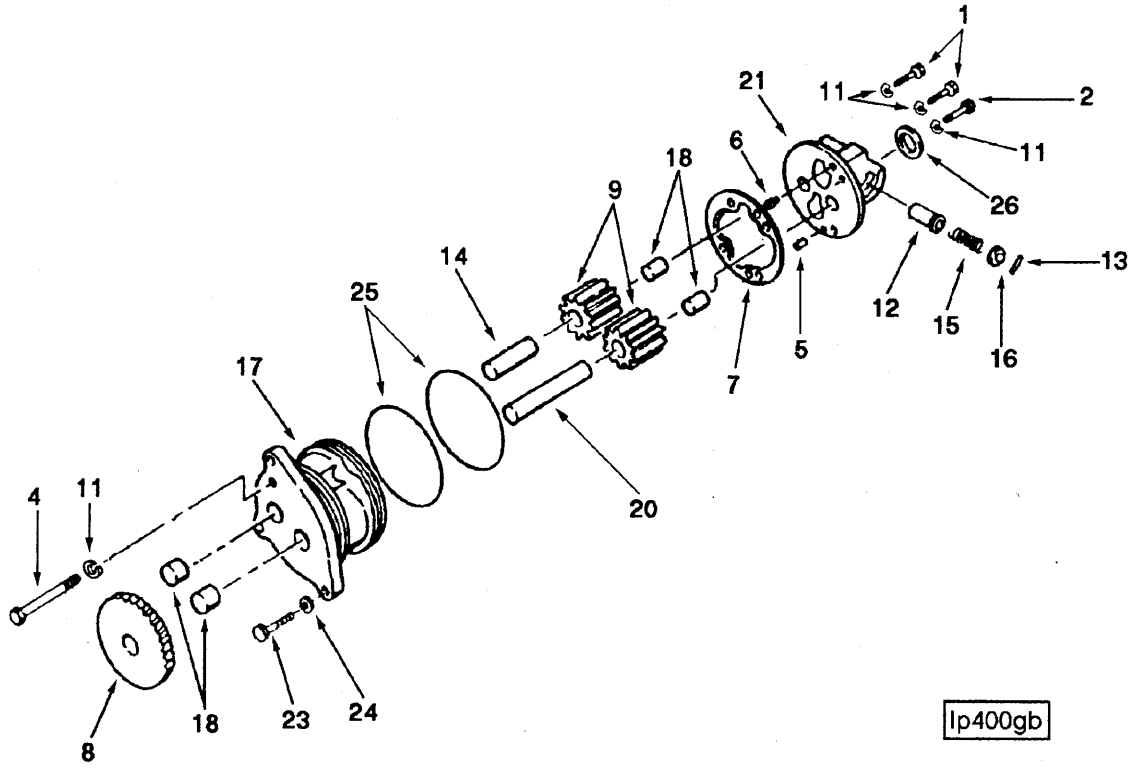
1
2
11
11
21
6
18
9
26
13
14
25
12
15
16
5
7
17
20
4
11
8
18
23
24
lp400gb

| Ref No. | Part Number | Part Name | Req | Remarks |
|---|---|---|---|---|
| | | **LUBRICATING OIL PUMP** | | |
| | | **OPTION BP4010** | | For KT(A)-1150 C,L,P,G configurations less rear gear train. |
| | 3047549 | Pump, Lubricating Oil | 1 | |
| 1 | S-126 | Screw, Hexagon Head Cap | 2 | 3/8 - 16 x 2 1/2 inches |
| 2 | S-141 | Screw, Hexagon Head Cap | 1 | 3/8 - 16 x 2 3/4 inches |
| 4 | S-199-A | Screw, Hexagon Head Cap | 1 | 3/8 - 16 x 4 inches |
| 5 | 70760 | Dowel, Pin | 1 | |
| 6 | 107948 | Dowel, Diamond | 1 | |
| 7 | 205061 | Gasket, Lub Oil Pump | 1 | |
| 8 | 207252 | Gear, Lubricating Oil Pump | 1 | |
| 9 | 3049543 | Gear, Lubricating Oil Pump | 2 | |
| 11 | S-604 | Washer, Lock | 4 | |
| 12 | 205080 | Plunger, Prs Regulator | 1 | |
| 13 | 205345 | Pin, Roll | 1 | |
| 14 | 205052 | Shaft, Idler | 1 | |
| 15 | 3062415 | Spring, Compression | 1 | |
| 16 | 3200934 | Plug, Retainer | 1 | |
| 17 | 205057 | Body, Lubricating Oil Pump | 1 | |
| | (205049) | Body, Lubricating Oil Pump | 1 | |
| 18 | 69521 | Bushing | 2 | |
| 20 | 205065 | Shaft, Lub Pump Drive | 1 | |
| 21 | 3047548 | Cover, Lub Oil Pump | 1 | |
| | (3009955) | Cover, Lub Oil Pump | 1 | |
| | | **MOUNTING PARTS** | | |
| 23 | S-103-D | Screw, Hexagon Head Cap | 3 | 3/8 - 16 x 1 inch |
| 24 | S-604 | Washer, Lock | 3 | |
| 25 | 205898 | Seal, O Ring | 2 | |
| 26 | 207135 | Seal, Rectangular Ring | 1 | |

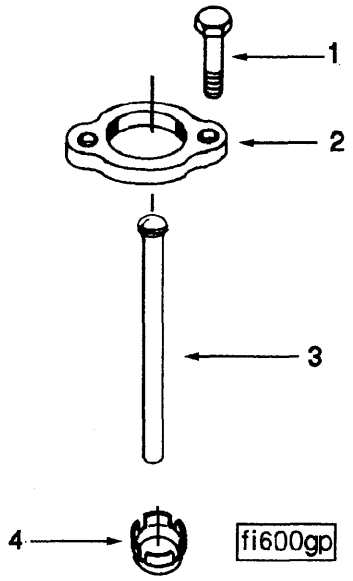


| Ref No. | Part Number | Part Name | Req | Remarks |
|---|---|---|---|---|
| | | **INJECTOR MOUNTING** | | |
| | | **OPTION BP4010** | | |
| 1 | 3070961 | Screw, Hexagon Head Cap | 12 | 5/16 - 18 x 1 inch |
| 2 | 3006696 | Clamp, Injector | 6 | |
| 3 | 205462 | Link, Injector Plunger | 6 | |
| 4 | 207244 | Seal, Injector | 6 | |
| | 3001658 | Seal, Injector | A/R | .010 Inch O/S |
| | 3001659 | Seal, Injector | A/R | .020 Inch O/S |
| | 3001660 | Seal, Injector | A/R | .030 Inch O/S |

# NOTES

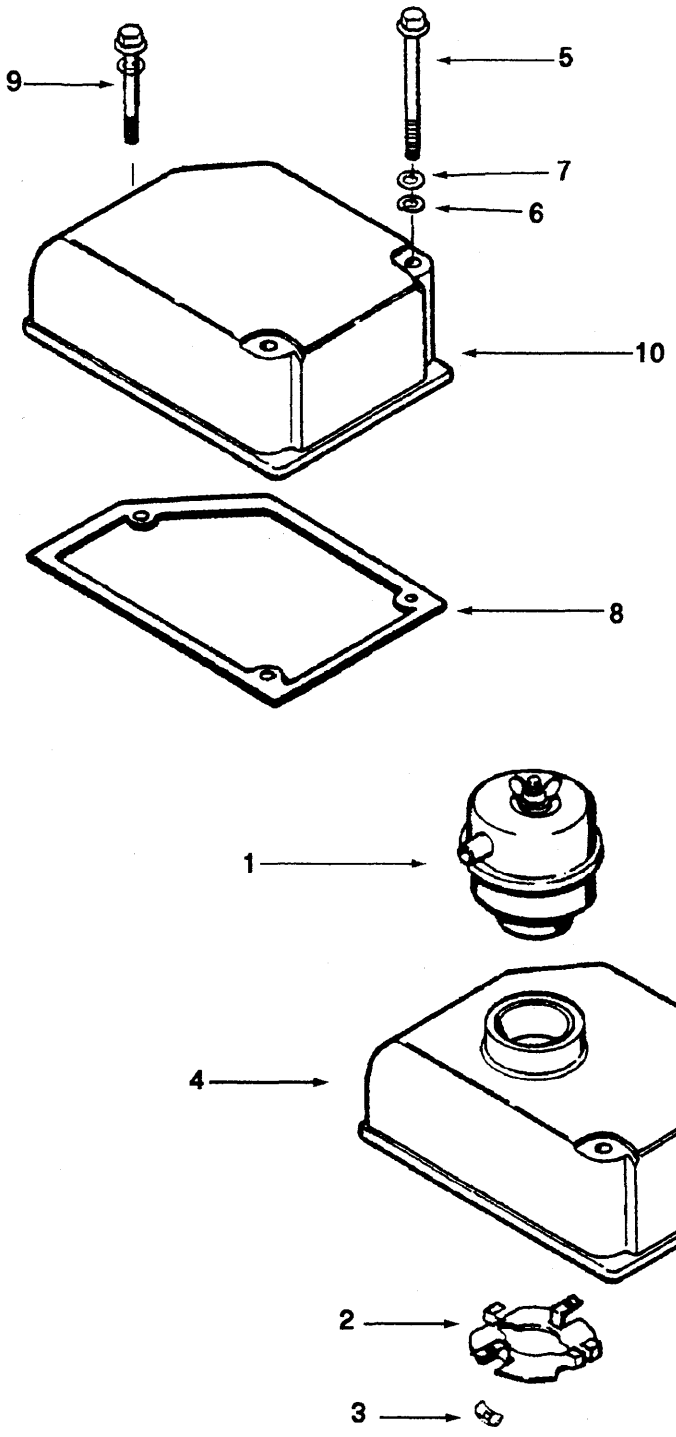
9
5
7
6
10
8
1
4
2
3
br400ga

| Ref No. | Part Number | Part Name | Req | Remarks |
|---|---|---|---|---|
| | | **BREATHER LOCATION** | | |
| | | **OPTION BR4002** | | Crankcase breathers mounted on no.1, no.2 and no.5 valve covers. |
| 1 | 156810 | Breather, Crankcase | 3 | |
| 2 | 219065 | Baffle, Breather | 3 | |
| 3 | 3000528 | Nut, Spring | 6 | 3/16 |
| 4 | 3010396 | Cover, Rocker Lever | 3 | |
| 5 | 3065950 | Screw, Captive Washer Cap | 12 | 3/8 - 16 x 4 1/2 inches |
| 8 | 3040720 | Gasket, Rocker Lever Cover | 6 | |
| 9 | 3044413 | Screw, Captive Washer Cap | 6 | 3/8 - 16 x 2 inches |
| 10 | 3010247 | Cover, Valve | 3 | |

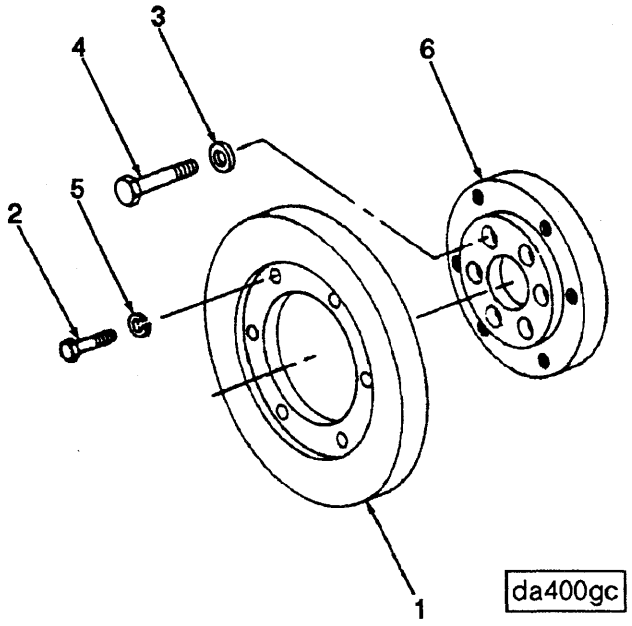


| Ref No. | Part Number | Part Name | Req | Remarks |
|---|---|---|---|---|
| | | **VIBRATION DAMPER** | | |
| | | **OPTION DA4001** | | Viscous type vibration damper. |
| 1 | 217322 | Damper, Vibration | 1 | |
| 2 | 210029 | Capscrew, Twelve Point | 6 | 1/2 - 20 x 1 1/4 inch |
| 3 | 205059 | Washer, Plain | 6 | Hardened |
| 4 | 206881 | Capscrew, Twelve Point | 6 | 3/4 - 16 x 4 inch |
| 5 | S-608 | Washer, Lock | 6 | |
| 6 | 3203694 | Adapter, Crankshaft | 1 | |

## NOTES

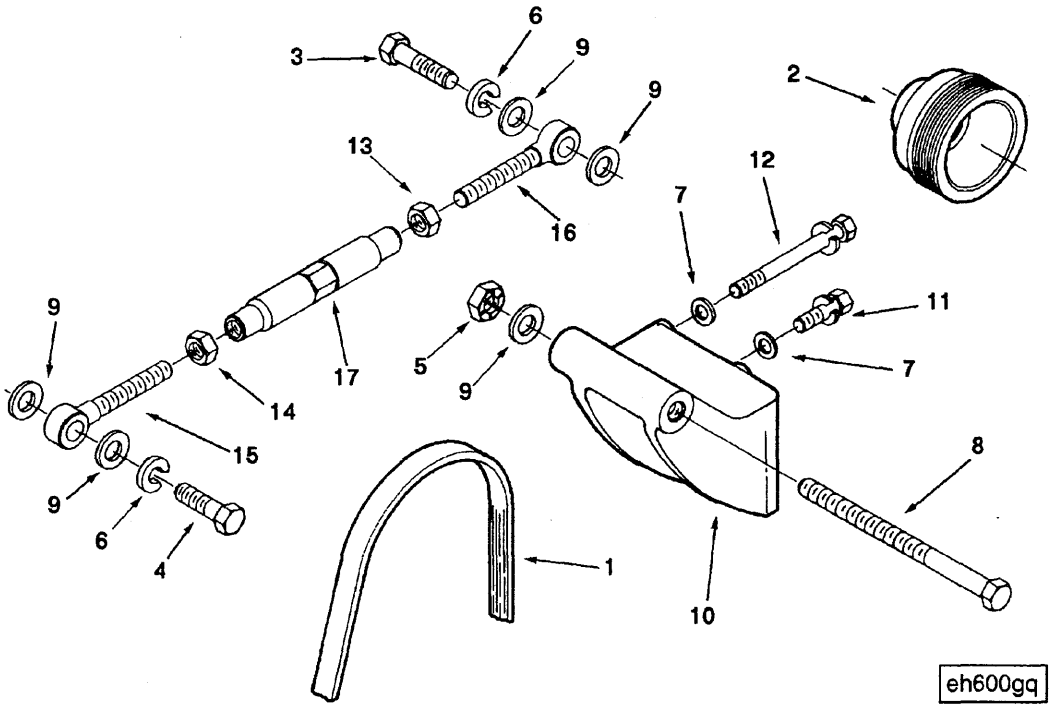
6
3
9
9
2
13
12
7
16
9
11
5
7
17
9
14
15
8
9
6
4
1
10
eh600gq

| Ref No. | Part Number | Part Name | Req | Remarks |
|---|---|---|---|---|
| | | **ALTERNATOR MOUNTING** | | |
| | | **OPTION EE4026** | | Mounting parts for Motorola alternators. Mounted in standard location and belt driven at 2.92 times engine speed. For gear driven fan drive arrangement or when no fan drive is specified. Includees bracket, link, belt, and 5 groove alternator pulley. |
| 1 | 206996 | Belt, V | 2 | |
| 2 | 3066528 | Pulley, Alternator | 1 | |
| 3 | S-106 | Screw, Hexagon Head Cap | 1 | 1/2 - 13 x 1 3/4 inches |
| 4 | S-113 | Screw, Hexagon Head Cap | 1 | 1/2 - 13 x 1 1/2 inches |
| 5 | 70897 | Nut, Lock | 1 | 1/2 - 20 |
| 6 | 111445 | Washer, Lock | 2 | |
| 7 | 127362 | Washer, Plain | 4 | |
| 8 | 158829 | Screw, Hexagon Head Cap | 1 | 1/2 - 20 x 6 1/2 inches |
| 9 | 203310 | Washer, Plain | 5 | |
| 10 | 3006774 | Bracket, Alternator | 1 | |
| 11 | 3010596 | Screw, Captive Washer Cap | 2 | 3/8 - 16 x 1 1/4 inches |
| 12 | 3010597 | Screw, Captive Washer Cap | 2 | 3/8 - 16 x 3 3/4 inches |
| | 3201188 | Link, Adjusting | 1 | |
| 13 | S-253 | Nut, Regular Hexagon Jam | 1 | 1/2 - 20 |
| 14 | 206202 | Nut, Jam | 1 | 1/2 - 20 |
| 15 | 3201185 | Link, Adjusting | 1 | |
| 16 | 3201186 | Link, Adjusting | 1 | |
| 17 | 3201187 | Link, Adjusting | 1 | |

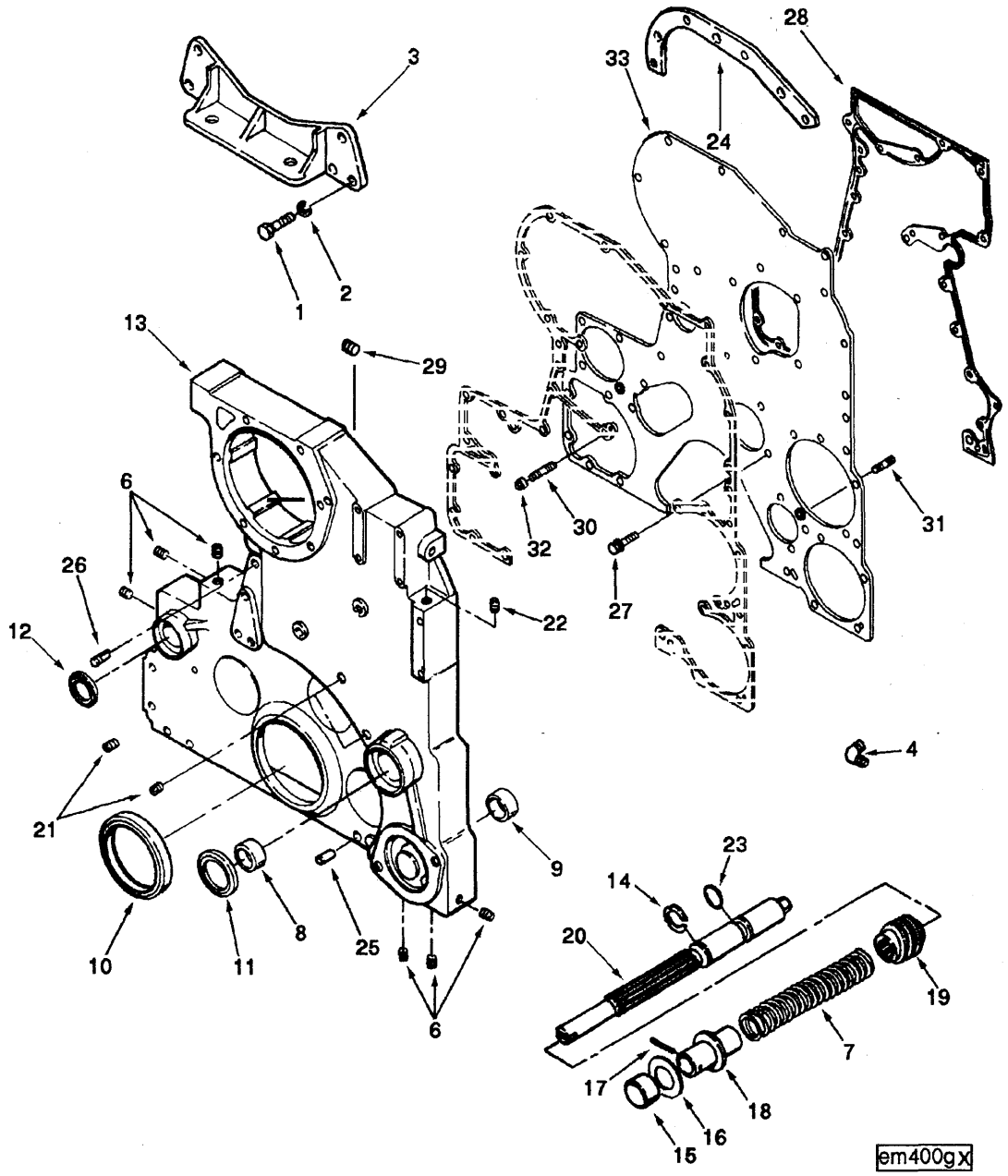
1
2
3
4
6
6
7
8
9
10
11
12
13
14
15
16
17
18
19
20
21
22
23
24
25
26
27
28
29
30
31
32
33
em400gx

| Ref No. | Part Number | Part Name | Req | Remarks |
|---|---|---|---|---|
| | | **FRONT ENGINE SUPPORT** | | |
| | | **OPTION EM4058** | | Two bolt pad type front engine support with 51/64 inch diamater holes to accept the commonly used 3/4 inch diameter Lord mount. Includes aluminum gear cover without front out hydraulic pump drive provisons. |
| 1 | S-173-A | Screw, Hexagon Head Cap | 6 | 5/8 - 11 x 2 1/4 inches |
| 2 | S-603 | Washer, Lock | 6 | |
| 3 | 206343 | Support, Front Engine | 1 | |
| 4 | S-1040-A | Elbow, Male Adapter | 1 | |
| 6 | 3025460 | Plug, Pipe | 6 | |
| 7 | 3009620 | Spring, Engine Barring | 1 | |
| 8 | 132770 | Bushing | 2 | |
| 9 | 205133 | Bushing | 1 | |
| 10 | 3016792 | Seal, Oil | 1 | |
| 11 | 3016788 | Seal, Oil | 1 | |
| 12 | 3016794 | Seal, Oil | 1 | |
| 13 | 3017318 | Cover, Gear | 1 | |
| 14 | 3015525 | Ring, Retaining | 1 | |
| | 3018914 | Guide, Barring Shaft | 1 | |
| 15 | (3018909) | Bushing | 1 | |
| 16 | (3018910) | Bearing, Thrust | 1 | |
| 17 | (3018911) | Pin, Roll | 1 | |
| 18 | (3019154) | Guide, Barring Shaft | 1 | |
| 19 | 3019152 | Gear, Engine Barring | 1 | |
| 20 | 3019153 | Shaft, Barring | 1 | |
| 21 | 3046202 | Plug, Threaded | 2 | |
| 22 | 3059831 | Plug, Drive | 1 | |
| 23 | 3201125 | Seal, O Ring | 1 | |
| 24 | 3200642 | Plate, Clamping | 1 | |
| 25 | 70645 | Dowel, Pin | 1 | |
| 26 | 102957 | Dowel, Diamond | 1 | |
| 27 | 3014766 | Screw, Captive Washer Cap | 12 | 3/8 - 16 x 1 inch |
| 28 | 3037282 | Gasket, Cover Plate | 1 | |
| 29 | S-965-E | Plug, Pipe | 1 | |
| 30 | 206217 | Stud | 1 | |
| 31 | 206218 | Stud | 1 | |
| 32 | 3019961 | Nut, Plug | 2 | 3/8 - 16 |
| 33 | 3044523 | Plate, Gear Cover | 1 | |

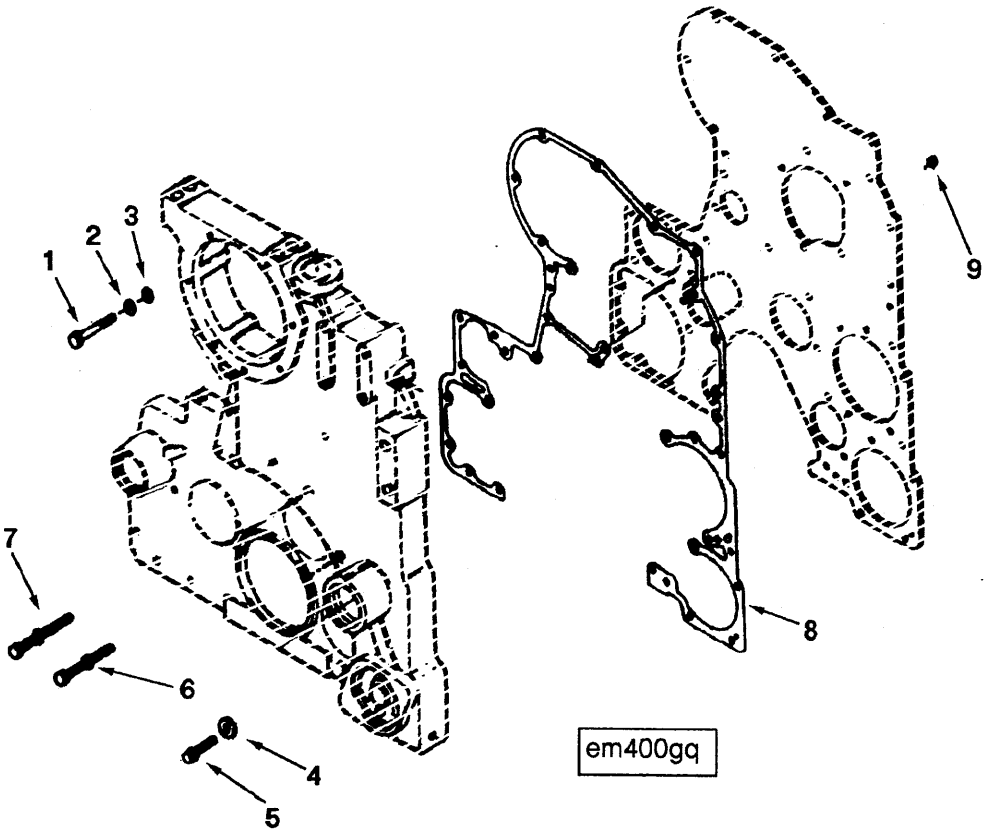
1
2
3
4
5
6
7
8
9
em400gq

| Ref No. | Part Number | Part Name | Req | Remarks |
|---|---|---|---|---|
| | | **GEAR COVER MOUNTING** | | |
| | | **OPTION EM4703** | | Mounting for aluminum gear cover without freon compressor. |
| 1 | S-199-B | Screw, Hexagon Head Cap | 7 | 3/8 - 16 x 3 3/4 inches |
| 2 | S-602 | Washer, Plain | 7 | |
| 3 | S-604 | Washer, Lock | 7 | |
| 4 | 127362 | Washer, Plain | 9 | |
| 5 | 205375 | Screw, Twelve Point Cap | 1 | 3/8 - 16 x 2 1/4 inches |
| 6 | 3010596 | Screw, Captive Washer Cap | 3 | 3/8 - 16 x 1 1/4 inches |
| 7 | 3012476 | Screw, Captive Washer Cap | 8 | 3/8 - 16 x 3 inches |
| 8 | 3044762 | Gasket, Gear Cover | 1 | |
| 9 | 3201128 | Nut, Regular Hexagon | 4 | 3/8 - 16 |

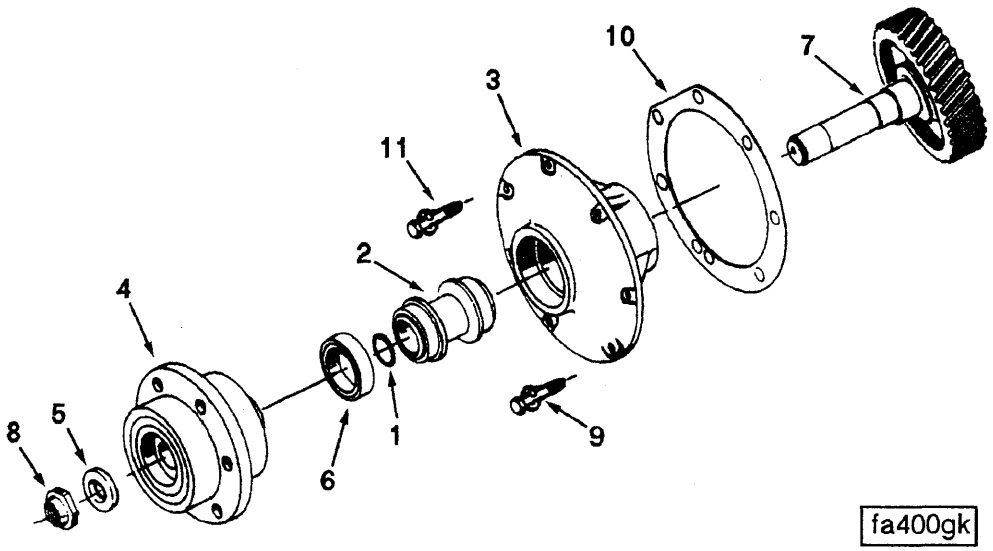


| Ref No. | Part Number | Part Name | Req | Remarks |
|---|---|---|---|---|
| | | **FAN DRIVE ARRANGEMENT** | | |
| | | **OPTION FA4081** | | Gear driven .84 to 1 drive ratio with 20.6" fan center & .28" to right of centerline of engine. Fan rotational inertia not to exceed 15.0 in-lb-sec squared. |
| | 3201750 | Hub, Fan | 1 | |
| 1 | 145536 | Seal, O Ring | 1 | |
| 2 | 200384 | Bearing, Roller | 1 | |
| 3 | 207079 | Support, Fan | 1 | |
| 4 | 3001275 | Hub, Fan | 1 | |
| 5 | 3012467 | Washer, Plain | 1 | |
| 6 | 3016789 | Seal, Oil | 1 | |
| 7 | 3201749 | Gear & Shaft | 1 | |
| 8 | 3202206 | Nut, Lock | 1 | |
| 9 | 3040838 | Screw, Captive Washer Cap | 2 | |
| 10 | 3042612 | Gasket, Fan Hub | 1 | |
| 11 | 3042890 | Screw, Captive Washer Cap | 5 | |

## NOTES

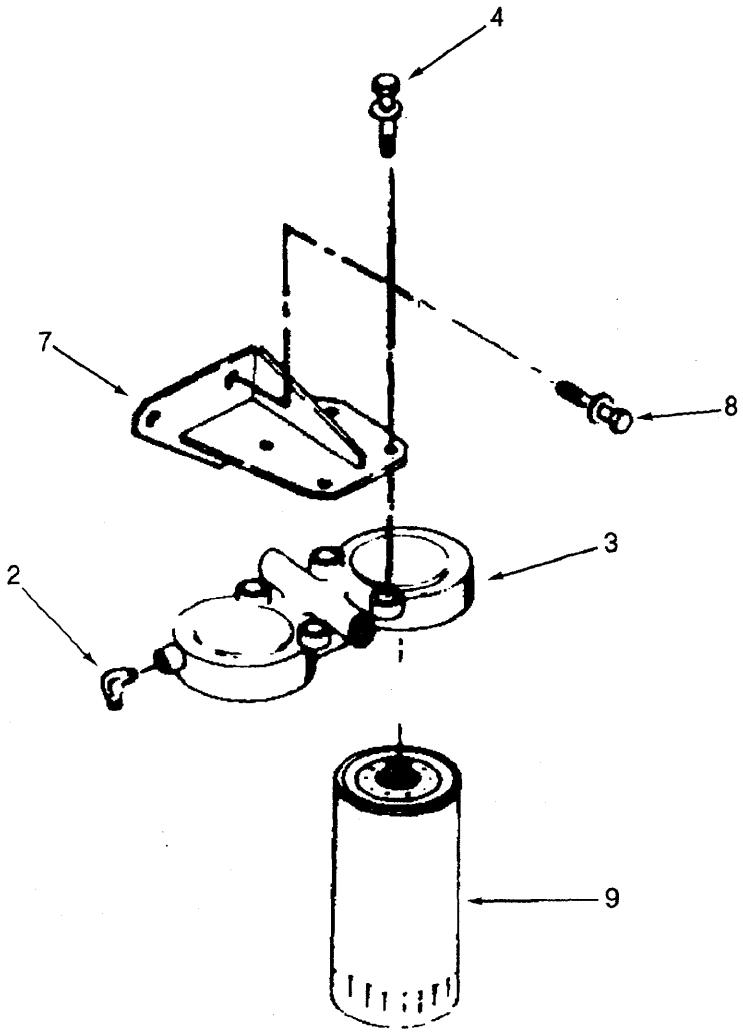
4
7
8
3
2
9
1
ff400go

| Ref No. | Part Number | Part Name | Req | Remarks |
|---|---|---|---|---|
| | | **FUEL FILTER** | | |
| | | **OPTION FF4001** | | Dual spin-on fuel filters without check valve. Mounted between fuel pump and lube oil filter at same level as lube filter head. For use without air compressor. |
| 1 | AS1003000SS | Hose | 1 | |
| 2 | 129859 | Elbow, Male Union | 2 | |
| 3 | 212013 | Head, Fuel Filter | 1 | |
| 4 | 3010596 | Screw, Captive Washer Cap | 4 | 3/8 - 16 x 1 1/4 inches |
| 7 | 3036027 | Bracket, Filter | 1 | |
| 8 | 3010595 | Screw, Captive Washer Cap | 4 | 3/8 - 16 x 1 inch |
| 9 | 3315847 | Filter, Fuel | 2 | |

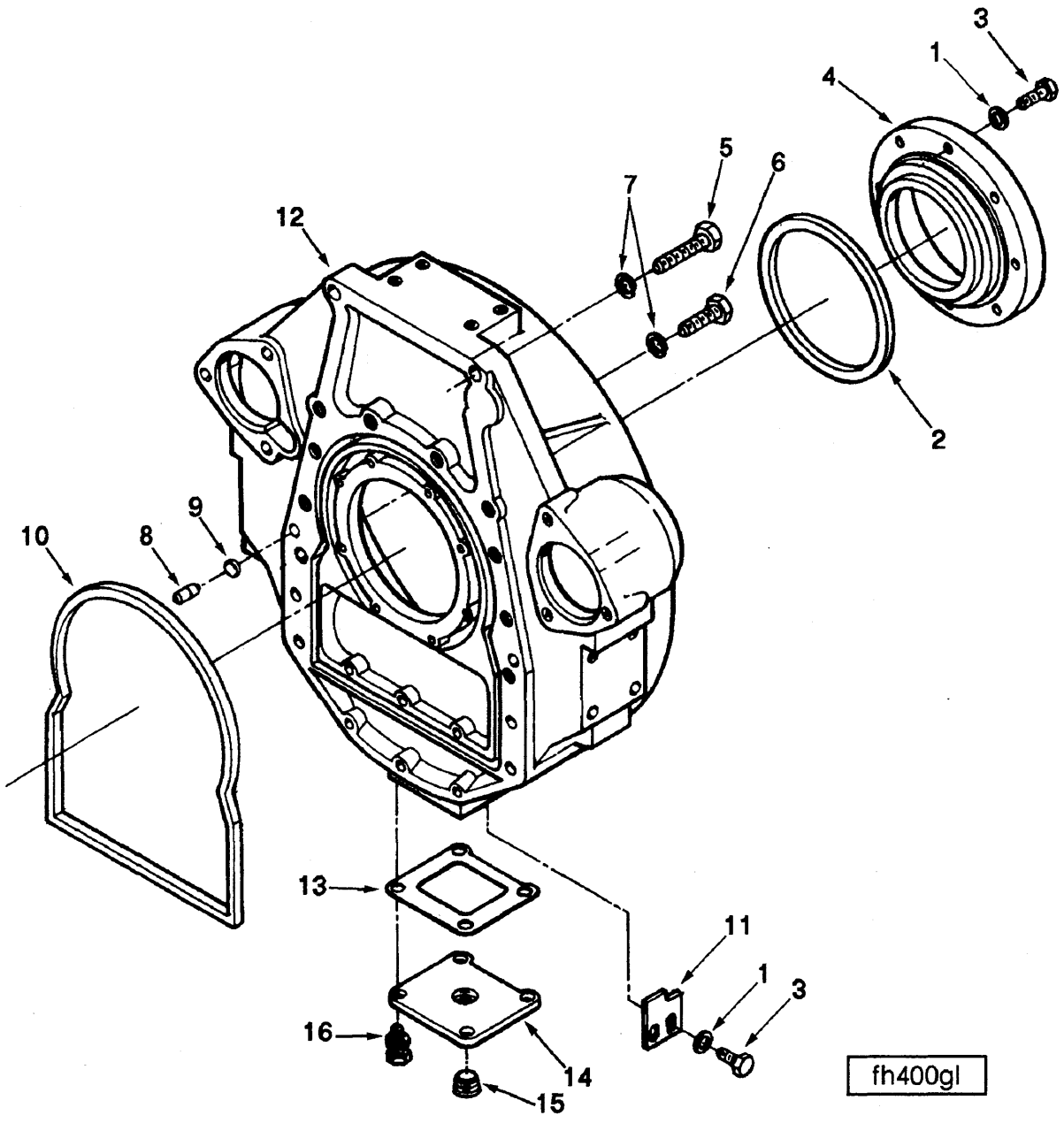
3
1
4
5
6
7
12
2
9
10
8
13
11
1
3
16
14
15
fh400gl

| Ref No. | Part Number | Part Name | Req | Remarks |
|---|---|---|---|---|
| | | **FLYWHEEL HOUSING** | | |
| | | **OPTION FH4141** | | SAE #1 cast iron flywheel housing for wet application and Twin Disc modulating clutch. Includes baffle. Has provisions for 3/4-16 magnetic pick-up and both sides machined for starter mounting. First used by IHC for the 560-B payloader. |
| 1 | S-631 | Washer, Plain | 10 | |
| 2 | 205247 | Seal, O Ring | 1 | |
| 3 | 205409 | Screw, Hexagon Head Cap | 10 | 1/4 - 20 x 5/8 inch |
| 4 | 3005886 | Seal, Oil | 1 | |
| 5 | S-103-A | Screw, Hexagon Head Cap | 2 | 5/8 - 11 x 2 inches |
| 6 | S-116 | Screw, Hexagon Head Cap | 10 | 5/8 - 11 x 1 1/2 inches |
| 7 | S-603 | Washer, Lock | 12 | |
| 8 | 9226 | Dowel, Flywheel Housing | 2 | |
| 9 | 172648 | Seal, Rectangular Ring | 2 | |
| 10 | 205239 | Seal, Rectangular Ring | 1 | |
| 11 | 207374 | Baffle, Oil | 1 | |
| 12 | 3036805 | Housing, Flywheel | 1 | |
| 13 | 207376 | Gasket, Oil Drain | 1 | |
| 14 | 3006485 | Cover, Flywheel Housing | 1 | |
| 15 | 3008470 | Plug, Pipe | 1 | |
| 16 | 3010595 | Screw, Captive Washer Cap | 4 | 3/8 - 16 x 1 inch |

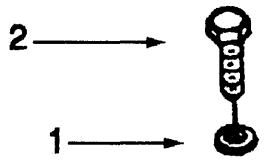


fh400gn

| Ref No. | Part Number | Part Name | Req | Remarks |
|---|---|---|---|---|
| | | **MAG PICKUP LOCATION PLUG** | | |
| | | **OPTION FH8713** | | 3/4-16 plug for the magnetic pick-up location in the flywheel housing. For use with both wet or dry flywheel housings. Required when Woodward 2301 electro- hydraulic governor, American Bosch governor, Cummins EFC governor, tachometer, or speed switch is not specified. |
| 1 | 553856 | Gasket, Drain Plug | 1 | |
| 2 | 3201759 | Screw, Hexagon Head Cap | 1 | 3/4 - 16 x 1/2 inch |

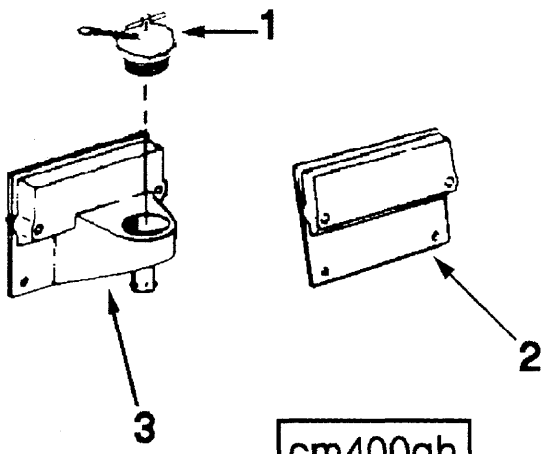


| Ref No. | Part Number | Part Name | Req | Remarks |
|---|---|---|---|---|
| | | **OIL FILL LOCATION** | | |
| | | **OPTION FO4025** | | Oil fill located on no. 4 cam follower cover. |
| 1 | 107981 | Cap, Filler | 1 | |
| 2 | 3009631 | Cover, Camshaft | 1 | |
| 3 | 3200414 | Bracket, Oil Tube | 1 | |

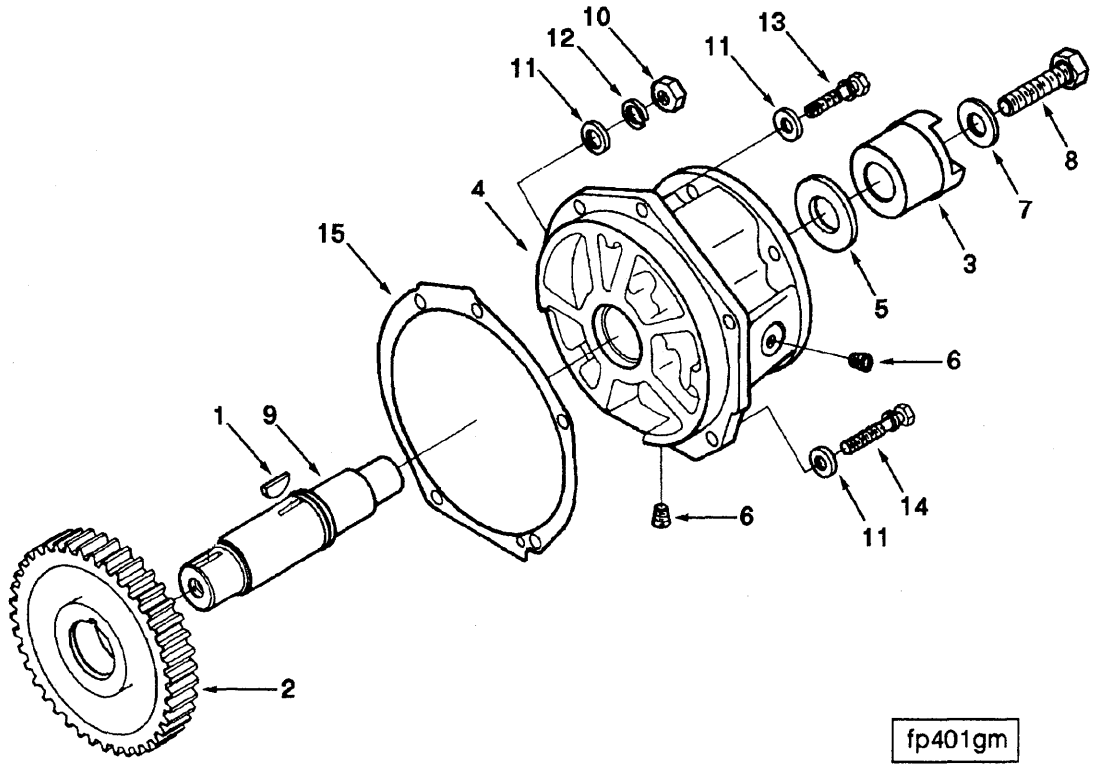


| Ref No. | Part Number | Part Name | Req | Remarks |
|---|---|---|---|---|
| | | **FUEL PUMP DRIVE** | | |
| | | **OPTION FP4815** | | |
| | | | | Fuel pump drive for use without air compressor. |
| | 3016734 | Drive Accessory | 1 | |
| 1 | S-316 | Key, Plain Woodruff | 1 | |
| 2 | 207253 | Gear, Accessory Drive | 1 | |
| 3 | 3000175 | Hub, Jaw Coupling | 1 | |
| 4 | 3009512 | Support, Accessory Drive | 1 | |
| 5 | 3014103 | Washer, Plain | 1 | |
| 6 | 3025460 | Plug, Pipe | 2 | |
| 7 | 3045136 | Washer, Plain | 1 | |
| 8 | 3045137 | Screw, Hexagon Head Cap | 1 | 1/2 - 20 x 2 inches |
| 9 | 3045229 | Shaft, Accessory Drive | 1 | |
| 10 | S-205 | Nut, Regular Hexagon | 1 | 3/8 - 24 |
| 11 | S-602 | Washer, Plain | 5 | |
| 12 | S-604 | Washer, Lock | 1 | 11/16 |
| 13 | 3033038 | Screw, Captive Washer Cap | 3 | 3/8 - 16 x 1.61 inches |
| 14 | 3044413 | Screw, Captive Washer Cap | 1 | 3/8 - 16 x 2 inches |
| 15 | 3201693 | Gasket, Acc Drive Suppt. | 1 | |

Group No. 05.01 **Fuel Pump** Option No. FP4959

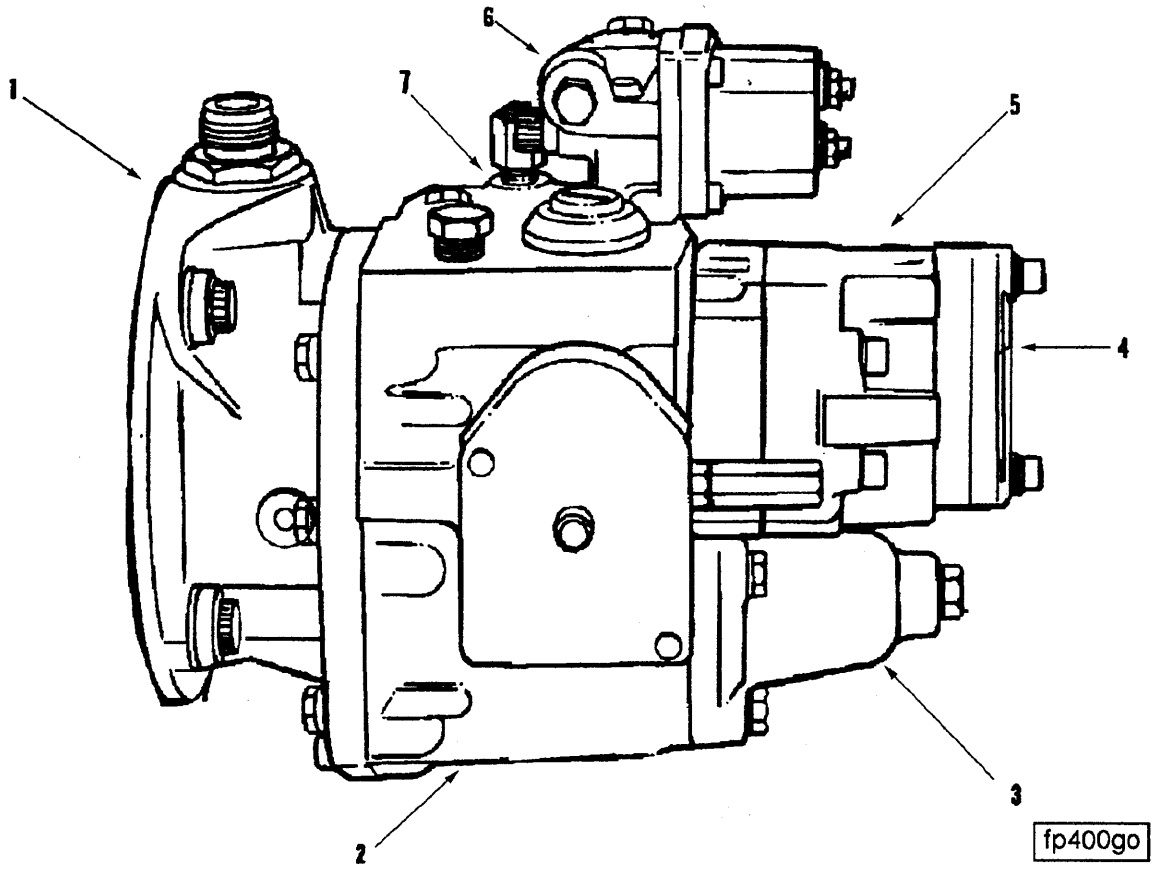


| Ref No. | Part Number | Part Name | Req | Remarks |
|---|---|---|---|---|
| | | **FUEL PUMP** | | |
| | | **OPTION FP4959** | | |
| | | | | PTG/Non-VS/Non-AFC pump with 3/4" cooled gear pump. Use with 3024242 hardware kit. |
| | 3060703 | Assembly, Fuel Pump | 1 | FCE-222 |
| 1 | 3030267 | Fuel Pump Front Cover | 1 | |
| 2 | 3060695 | Fuel Pump Housing | 1 | |
| 3 | 3021977 | Idle Spring Pack | 1 | |
| 4 | AR12110 | Damper, Fuel Pump & Mtg. | 1 | |
| 5 | 3034217 | Fuel Pump Gear Assembly | 1 | |
| 6 | | Fuel Shutoff Valve | 1 | Reference FV8010 |
| 7 | 3028347 | Barrel Plug Assembly | 1 | |

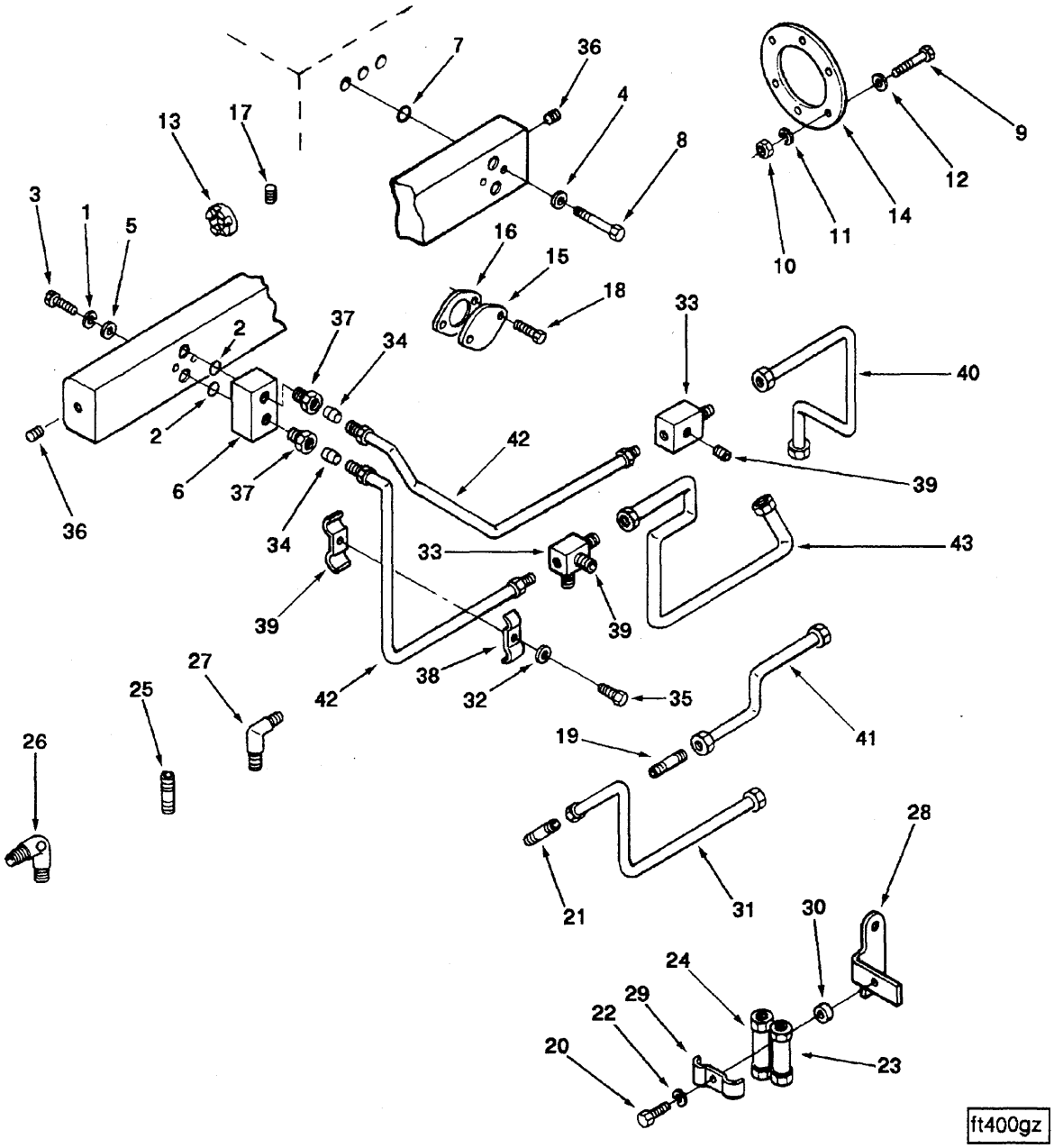
ft400gz

Group No. 06.03 **Fuel Tubing** Option No. FT40002

| Ref No. | Part Number | Part Name | Req | Remarks |
|---|---|---|---|---|
| | | **FUEL TUBING** | | |
| | | **OPTION FT40002** | | Fuel tubing for front fuel block with non-AFC/ Auto or VS fuel pump, gear pump cooling, check valves and with or without Cummins EFC governor. Without air compressor. May be used with standard or high pressure solenoid valve. |
| 1 | S-607 | Washer, Lock | 2 | |
| 2 | 100478 | Seal, O Ring | 2 | |
| 3 | 118226 | Screw, Socket Head Cap | 2 | 3/16 - 24 x 1 1/4 inches |
| 4 | 127018 | Washer, Plain | 12 | |
| 5 | 128006 | Washer, Plain | 2 | |
| 6 | 207442 | Connection, Fuel Block | 1 | |
| 7 | 3001340 | Seal, O Ring | 12 | |
| 8 | 3001811 | Screw, Twelve Point Cap | 12 | 1/4 - 20 x 1 inch |
| 9 | S-140 | Screw, Hexagon Head Cap | 4 | 7/16 - 14 x 1 3/4 inches |
| 10 | S-217 | Nut, Heavy Hexagon | 4 | |
| 11 | S-610 | Washer, Lock | 4 | |
| 12 | 69324 | Washer, Plain | 4 | |
| 13 | 3046200 | Spider, Jaw Coupling | 1 | |
| 14 | 3048341 | Gasket, Fuel Pump | 1 | |
| 15 | 207112 | Flange, Weld | 1 | |
| 16 | 207117 | Gasket, Air Compressor | 1 | |
| 17 | 3013786 | Plug, Pipe | 1 | |
| 18 | 3014766 | Screw, Captive Washer Cap | 2 | 3/8 - 16 x 1 inch |
| 19 | 181213 | Elbow, Plain Adapter | 1 | |
| 20 | S-156-B | Screw, Hexagon Head Cap | 1 | |
| 21 | 68138 | Connector, Male | 1 | |
| 22 | 70704 | Washer, Plain | 1 | |
| 23 | 3028324 | Valve, Check | 1 | |
| 24 | 3028325 | Valve, Check | 1 | |
| 25 | 3032872 | Union, Male | 2 | |
| 26 | 3033023 | Elbow, Male Union | 1 | |
| 27 | 3033024 | Elbow, Male Union | 1 | |
| 28 | 3200069 | Bracket, Check Valve | 1 | |
| 29 | 3200070 | Brkt Check Vlv | 1 | |
| 30 | 3201614 | Spacer, Mounting | 1 | |
| 31 | 3200103 | Tube, Fuel Supply | 1 | |
| 32 | 127362 | Washer, Plain | 2 | |
| 33 | 176288 | Tee, Female Adapter | 2 | |
| 34 | 3002150 | Seal, Ferrule | 2 | |
| 35 | 3012478 | Screw, Captive Washer Cap | 2 | 3/8 - 16 x 3 1/2 inches |
| 36 | 3025460 | Plug, Pipe | 2 | |
| 37 | 3031404 | Connector, Tube | 2 | |
| 38 | 3200386 | Clamp, Tube | 2 | |
| 39 | 3200387 | Clamp, Tube | 2 | |
| 40 | 3200405 | Tube, Fuel Supply | 1 | |
| 41 | 3200425 | Tube, Fuel Drain | 1 | |
| 42 | 3201115 | Tube, Fuel Supply | 2 | |
| 43 | 3201737 | Tube, Fuel Drain | 1 | |

Group No. 05.06 **Fuel Shutdown Valve** Option No. FV8010

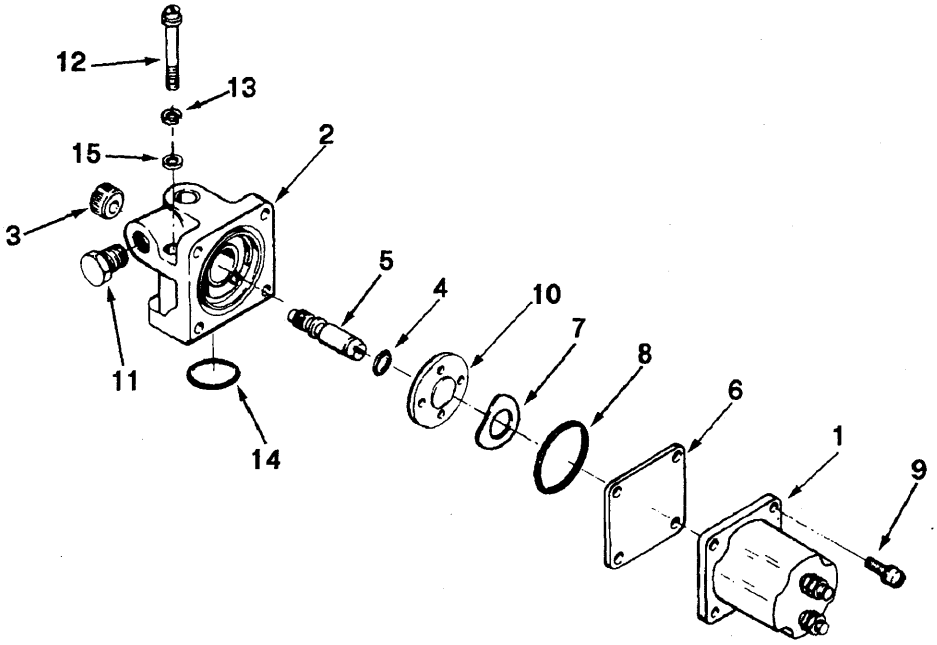


fv400ga

Group No. 05.06 **Fuel Shutdown Valve** Option No. FV8010

| Ref No. | Part Number | Part Name | Req | Remarks |
|---|---|---|---|---|
| | | **FUEL SHUTOFF VALVE** | | |
| | | **OPTION FV8010** | | 24 Volt solenoid operated fuel shut-off valve. Two terminals. Mounted on fuel pump. |
| | 3035346 | Valve, Shutoff | 1 | |
| 1 | 134076 | Solenoid | 1 | |
| | 129886 | Body, Shutoff Valve | 1 | |
| 2 | 129826 | Body, Shutoff Valve | 1 | |
| 3 | 129838 | Knob | 1 | |
| 4 | 3279794 | Seal, O Ring | 1 | |
| 5 | 3000266 | Shaft, Shutoff Valve | 1 | |
| 6 | 129839 | Shield, Shutoff Valve | 1 | |
| 7 | 129768 | Spring, Valve | 1 | |
| 8 | 129888 | Seal, Rectangular Ring | 1 | |
| 9 | 187556 | Screw, Fillister Head | 4 | 3/16 - 24 x 5/8 inch |
| 10 | 3030970 | Disc, Valve | 1 | |
| 11 | 3025458 | Plug, Pipe | 1 | |
| 12 | S-189-C | Screw, Socket Head Cap | 2 | 1/4 - 20 x 1 3/4 inch |
| 13 | 181466 | Washer, Lock | 2 | |
| 14 | 154087 | Seal, Rectangular Ring | 1 | |
| 15 | 67684 | Washer, Plain | 2 | |

Group No. 16.02 **Flywheel** Option No. FW4104

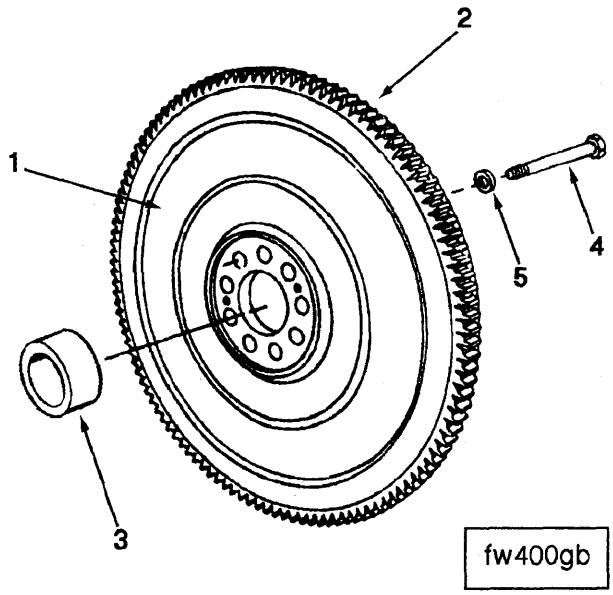


| Ref No. | Part Number | Part Name | Req | Remarks |
|---|---|---|---|---|
| | | **FLYWHEEL** | | |
| | | **OPTION FW4104** | | For Clark 8000 series converters. |
| | 3015866 | Flywheel | 1 | |
| 1 | (3062392) | Flywheel | 1 | |
| 2 | 4851 | Gear, Flywheel Ring | 1 | |
| 3 | 206397 | Bushing | 1 | |
| 4 | 3251706 | Screw, Head Locking | 9 | |
| 5 | 200861 | Washer, Plain | 9 | |

## NOTES

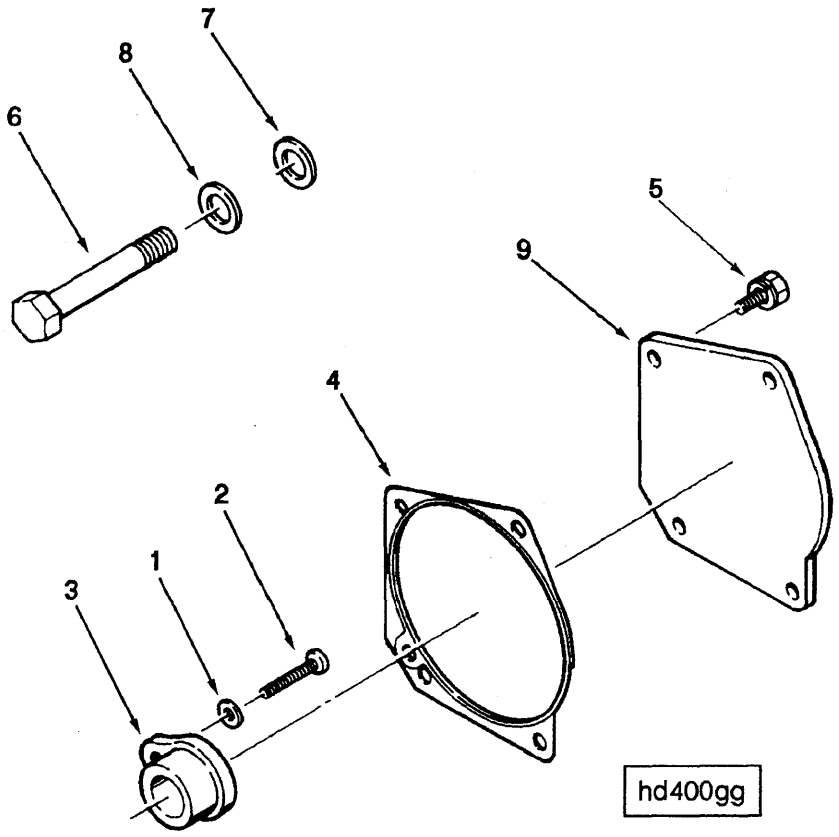
7
8
6
5
9
4
2
1
3
hd400gg

Group No. 12.04 **Hydraulic Pump** Option No. HD4067

| Ref No. | Part Number | Part Name | Req | Remarks |
|---|---|---|---|---|
| | | **COVER PLATE** | | |
| | | **OPTION HD4067** | | Cover plate for rear of front gear cover when no hydraulic pump drive provision is specified. |
| 1 | S-604 | Washer, Lock | 1 | |
| 2 | S-103-D | Screw, Hexagon Head Cap | 1 | 3/8 - 16 x 1 1/4 inches |
| 3 | 3003123 | Insert, Pump Drive | 1 | |
| 4 | 3007380 | Gasket, Hydraulic Pump | 1 | |
| 5 | 3012472 | Screw, Captive Washer Cap | 4 | 3/8 - 16 x 1 1/2 inches |
| 6 | S-123-A | Screw, Hexagon Head Cap | 1 | 5/8 - 18 x 2 inches |
| 7 | 3017346 | Washer, Plain | 1 | |
| 8 | 3200772 | Washer, Plain | 1 | |
| 9 | 3201609 | Cover, Hyd Pump Flange | 1 | |

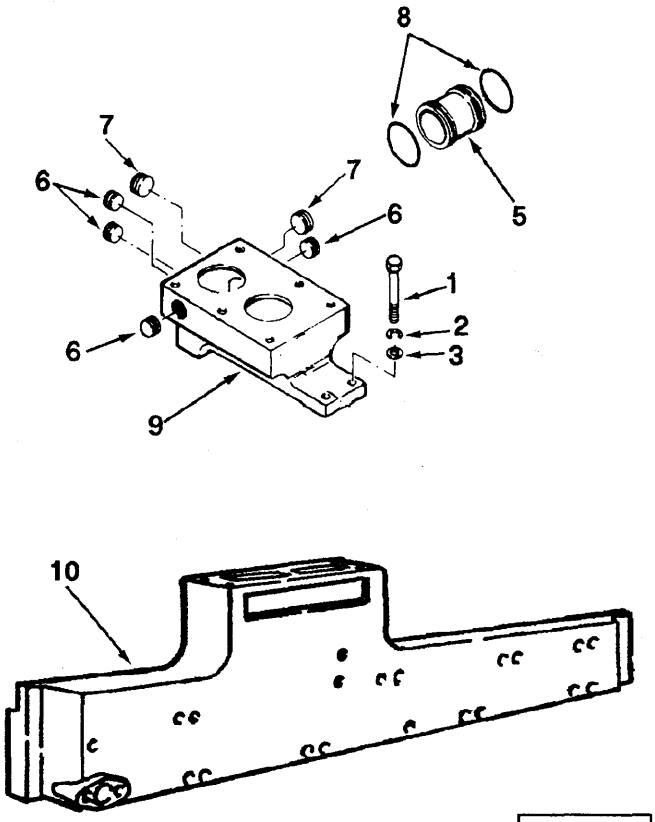


im400ga

| Ref No. | Part Number | Part Name | Req | Remarks |
|---|---|---|---|---|
| | | **INTAKE MANIFOLD** | | |
| | | **OPTION IM4005** | | Non aftercooled intake manifold. For use on 1 piece gear cover engines. |
| 1 | S-141 | Screw, Hexagon Head Cap | 2 | |
| 2 | S-604 | Washer, Lock | 2 | |
| 3 | 127362 | Washer, Plain | 2 | |
| 5 | 207378 | Tube, Water Transfer | 1 | |
| 6 | 3008468 | Plug, Pipe | 4 | |
| 7 | 3008469 | Plug, Pipe | 2 | |
| 8 | 3028291 | Seal, O Ring | 2 | |
| 9 | 3200630 | Support, Thm Housing | 1 | |
| 10 | 3202155 | Manifold, Air Intake | 1 | |

Group No. 10.01 **Intake Manifold** Option No. IM4716

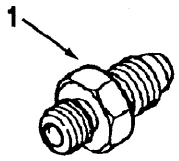


im400gg

| Ref No. | Part Number | Part Name | Req | Remarks |
|---|---|---|---|---|
| | | **INTAKE MANIFOLD** | | |
| | | **OPTION IM4716** | | Vent line plumbing for KT thermostat housing without expansion tank. |
| 1 | 143950 | Connector, Male | 1 | |

Group No. 10.01 **Intake Manifold** Option No. IM4719

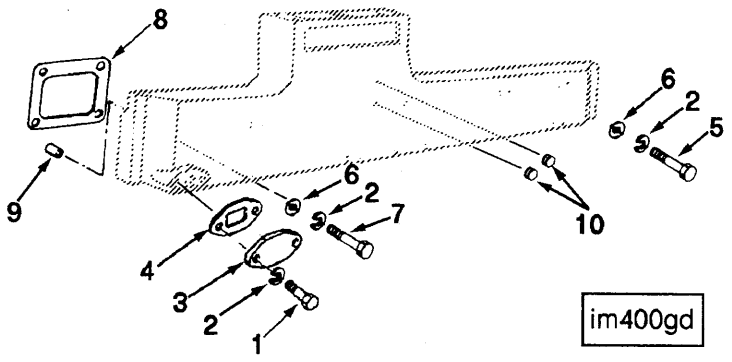


| Ref No. | Part Number | Part Name | Req | Remarks |
|---|---|---|---|---|
| | | **INTAKE MANIFOLD MOUNTING OPTION IM4719** | | Mounting for non aftercooled intake manifold. For use with non AFC fuel pump. Without air compressor inlet plumbing and noise panels. |
| 1 | S-103-D | Screw, Hexagon Head Cap | 2 | |
| 2 | S-604 | Washer, Lock | 26 | |
| 3 | 3011693 | Plate, Cover | 1 | |
| 4 | 3201388 | Gasket, Flange | 1 | |
| 5 | 123204 | Screw, Hexagon Head Cap | 4 | |
| 6 | 127362 | Washer, Plain | 24 | |
| 7 | 137868 | Screw, Hexagon Head Cap | 20 | |
| 8 | 206277 | Gasket, Intake Manifold | 6 | |
| 9 | 3014304 | Seal, Rectangular Ring | 1 | |
| 10 | 3008466 | Plug, Pipe | 2 | |

Group No. 07.03 **Lubricating Oil Filter** Option No. LF4011

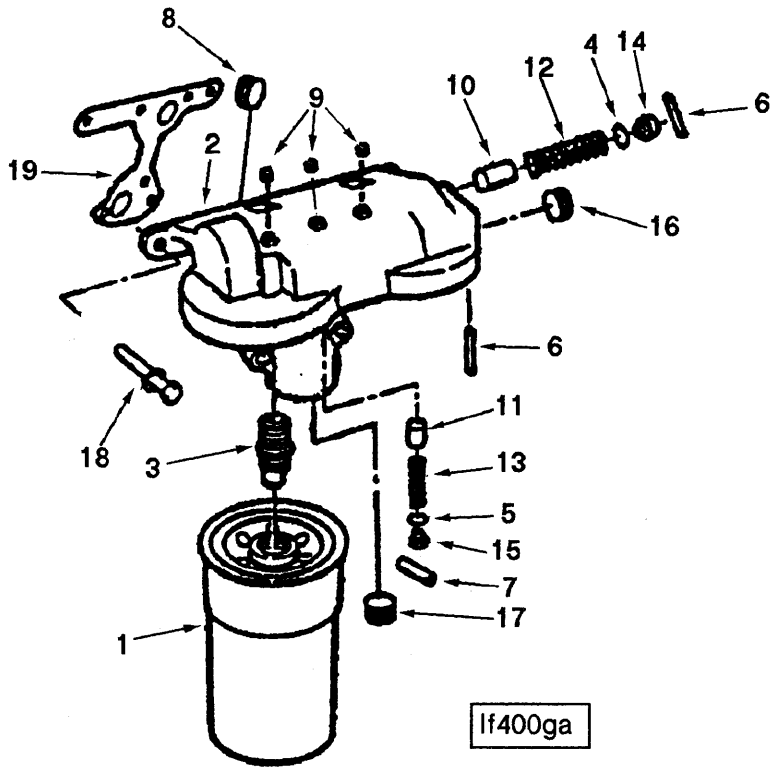


| Ref No. | Part Number | Part Name | Req | Remarks |
|---|---|---|---|---|
| | | **OIL FILTER** | | |
| | | **OPTION LF4011** | | Dual spin on oil filters mounted high and to the rear of block on fuel pump side. |
| 1 | (3313287) | Element, Lub Oil Filter | 2 | |
| 2 | 3200965 | Lube Oil Filter Head | 1 | |
| | (3202156) | Head, Lub Oil Filter | 1 | |
| 3 | 3034578 | Adapter, Filter Head | 2 | |
| 4 | 3029820 | Seal, O Ring | 1 | |
| 5 | 3201125 | Seal, O Ring | 1 | |
| 6 | 205345 | Pin, Roll | 2 | |
| 7 | 161737 | Pin, Roll | 1 | |
| 8 | 3201583 | Plug, Threaded | 1 | |
| 9 | 3025458 | Plug, Pipe | 3 | |
| 10 | 205347 | Plunger, Bypass Valve | 1 | |
| 11 | 205348 | Plunger, Pst Cooling Valve | 1 | |
| 12 | 205346 | Spring, Compression | 1 | |
| 13 | 3007170 | Spring, Piston Cool Vlv | 1 | |
| 14 | 69533 | Stop, Actuator | 1 | |
| 15 | 205350 | Plug, Retainer | 1 | |
| 16 | 3008470 | Plug, Pipe | 1 | |
| 17 | 3013786 | Plug, Pipe | 1 | |
| 18 | 3040838 | Screw, Captive Washer Cap | 6 | 3/8 - 16 x 1 1/4 inches |
| 19 | 3200977 | Gasket, Lub Oil Fil Cover | 1 | |

Group No. 07.02 **Oil Gauge/Dip Arrangement** Option No. OB4091

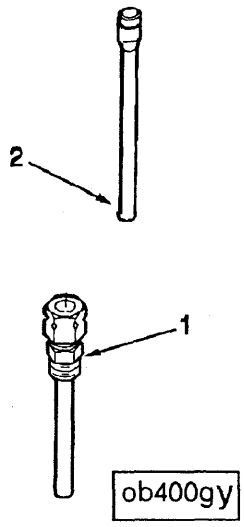


| Ref No. | Part Number | Part Name | Req | Remarks |
|---|---|---|---|---|
| | | **DIPSTICK TUBE** | | |
| | | **OPTION OB4091** | | 1.84 inch dipstick tube. First used by clark on the 275 front loader. |
| 1 | 3000508 | Tube, Oil Gauge | 1 | |
| 2 | 3065684 | Tube, Oil Gauge | 1 | |

Group No. 01.08 **Oil Gauge Bracket** Option No. OB4841

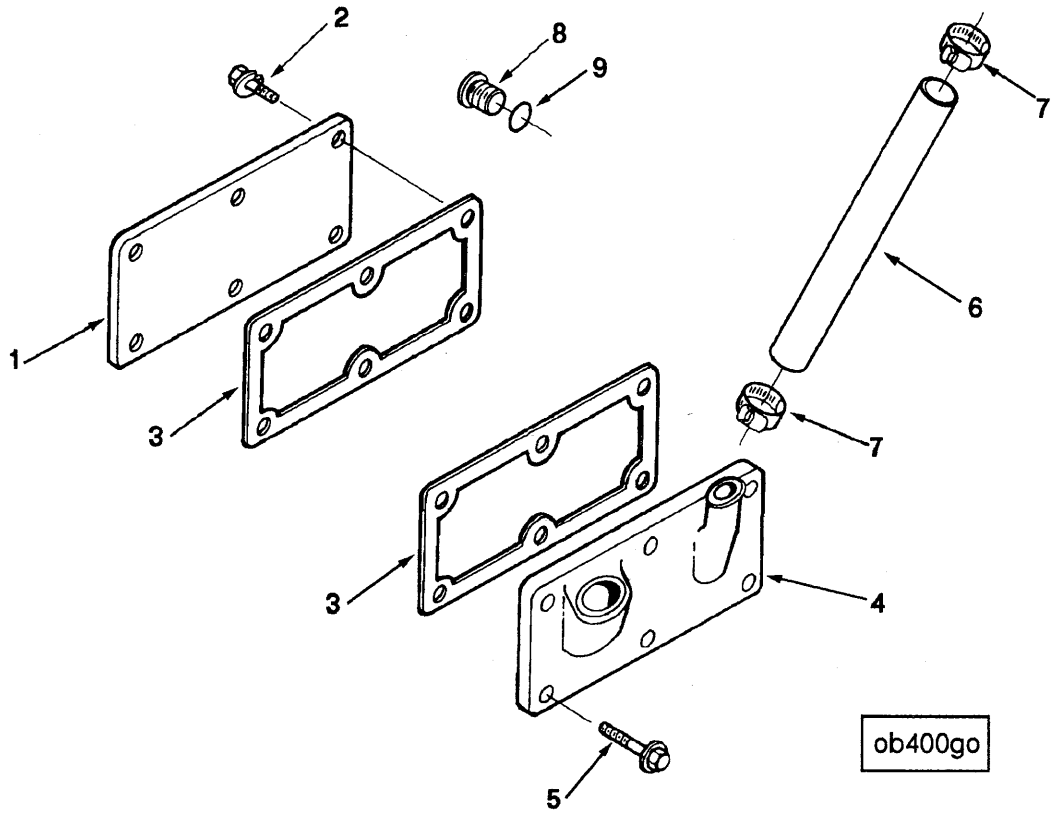


| Ref No. | Part Number | Part Name | Req | Remarks |
|---|---|---|---|---|
| | | **HAND HOLE COVERS** | | |
| | | **OPTION OB4841** | | Hand hole covers used when the dipstick is located in the hand hole cover fuel pump side with oil fill location on cam follower cover. |
| 1 | 3201060 | Cover, Hand Hole | 2 | |
| 2 | 3010595 | Screw, Captive Washer Cap | 12 | 3/8 - 16 x 1 1/2 inch |
| 3 | 3042586 | Gasket, Hand Hole | 3 | |
| 4 | 3002494 | Cover, Hand Hole | 1 | |
| 5 | 3011716 | Screw, Captive Washer Cap | 6 | 3/8 - 16 x 1 3/8 inch |
| 6 | AS1602000NF | Hose | 1 | |
| 7 | 43828-A | Clamp, Hose | 2 | |
| | 3046202 | Plug, Threaded | 3 | |
| 8 | (3040810) | Plug, Threaded | 1 | |
| 9 | 3046201 | Seal, O Ring | 1 | |

Group No. 07.02 **Oil Gauge/Dip Arraangement** Option No. OB4935

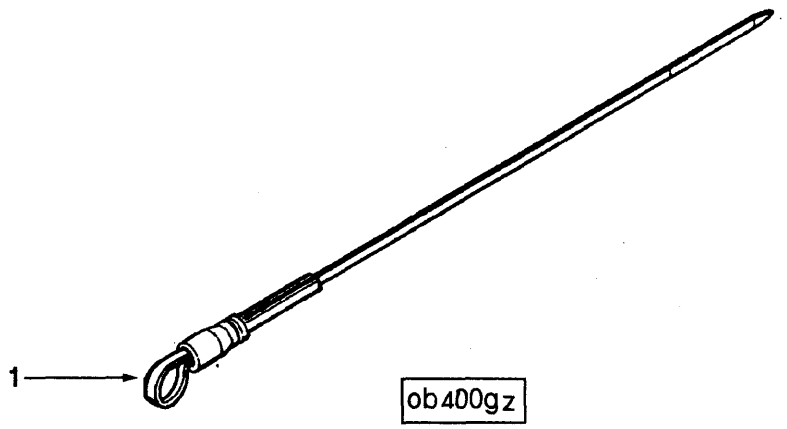


| Ref No. | Part Number | Part Name | Req | Remarks |
|---|---|---|---|---|
| | | **DIPSTICK** | | |
| | | **OPTION OB4935** | | Dipstick for 1.84inch tube (OB4091) located in hand hole covers fuel pump or exhaust side with a shallow sump oil pan. |
| 1 | 3064724 | Dipstick | 1 | |

## NOTES

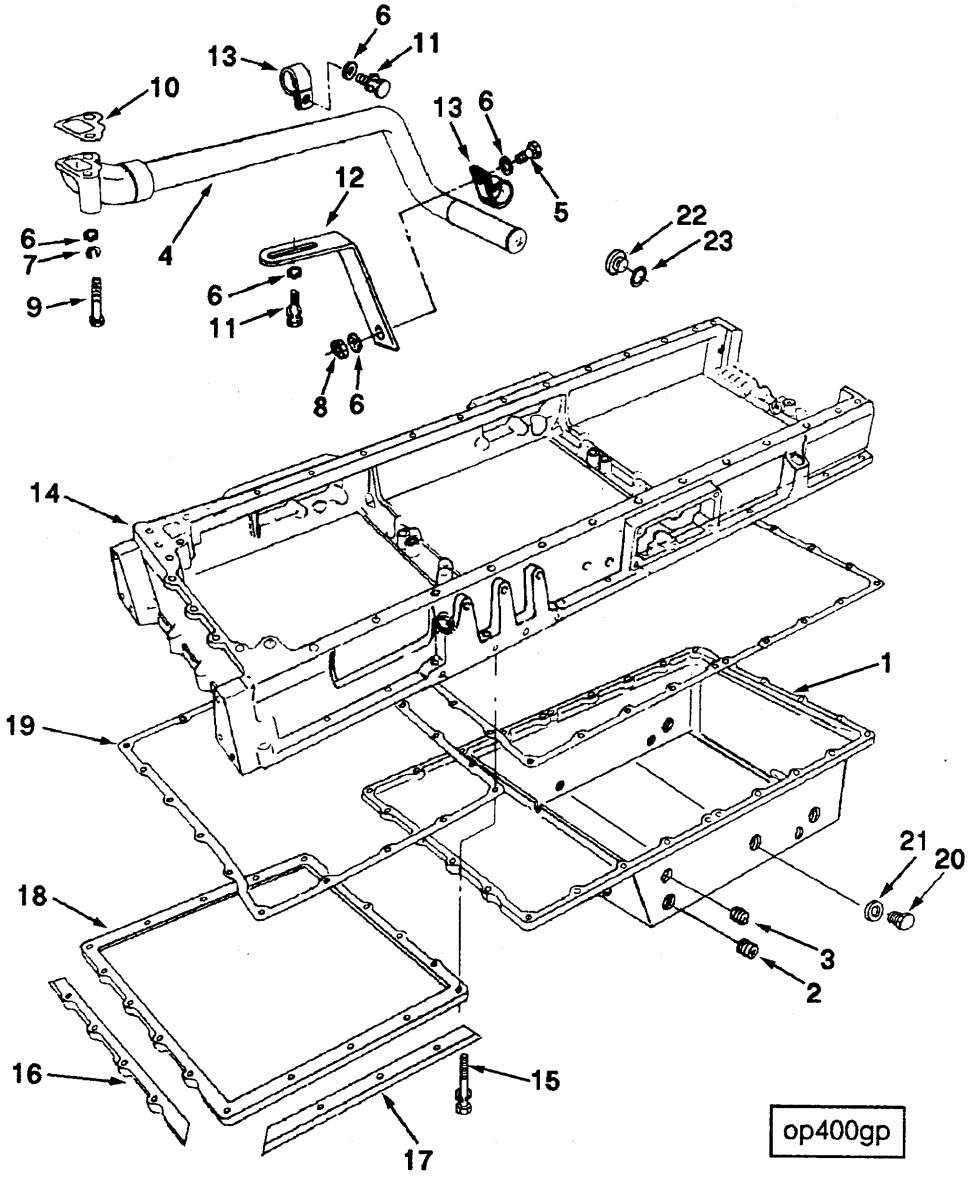
6
13
11
10
13
6
12
5
22
23
6
7
4
9
6
11
8
6
14
1
19
21
20
18
3
2
16
15
17
op400gp

Group No. 07.01 **Oil Pan** Option No. OP4022

| Ref No. | Part Number | Part Name | Req | Remarks |
|---|---|---|---|---|
| | | **OIL PAN** | | |
| | | **OPTION OP4022** | | Cast aluminum shallow center front sump oil pan. Oil drain, both sides. Bypass filter return, both sides. Oil level 10gallons (38liter) high. 8.5gallons (32.3liter) low. Gear cover plate design. |
| 1 | 3202152 | Pan, Oil | 1 | |
| 2 | 3008468 | Plug, Pipe | 2 | |
| 3 | 3008470 | Plug, Pipe | 2 | |
| 4 | 3011046 | Connection, Oil Suction | 1 | |
| 5 | S-129 | Screw, Hexagon Head Cap | 1 | |
| 6 | S-602 | Washer, Plain | 3 | |
| 7 | S-610 | Washer, Lock | 2 | |
| 8 | 129069 | Nut, Lock | 1 | |
| 9 | 137890 | Screw, Hexagon Head Cap | 2 | |
| 10 | 3008403 | Gasket, Oil Suc Connection | 1 | |
| 11 | 3010595 | Screw, Captive Washer Cap | 2 | |
| 12 | 3200707 | Brace, Tube | 1 | |
| 13 | 3200706 | Clip | 1 | |
| 14 | 3202153 | Adapter, Oil Pan | 1 | |
| 15 | 3040838 | Screw, Captive Washer Cap | 18 | |
| 16 | 3064700 | Plate, Clamping | 2 | |
| 17 | 3064701 | Plate, Clamping | 2 | |
| 18 | 3201995 | Cover, Oil Pan Adapter | 1 | |
| 19 | 3202259 | Gasket, Adapter | 1 | |
| 20 | S-181-C | Screw, Hexagon Head Cap | 2 | |
| 21 | 3000204 | Washer, Copper | 2 | |
| | 3046942 | Plug, Threaded | 2 | |
| 22 | 3046869 | Plug, Threaded | 1 | |
| 23 | 3046943 | Seal, O Ring | 1 | |

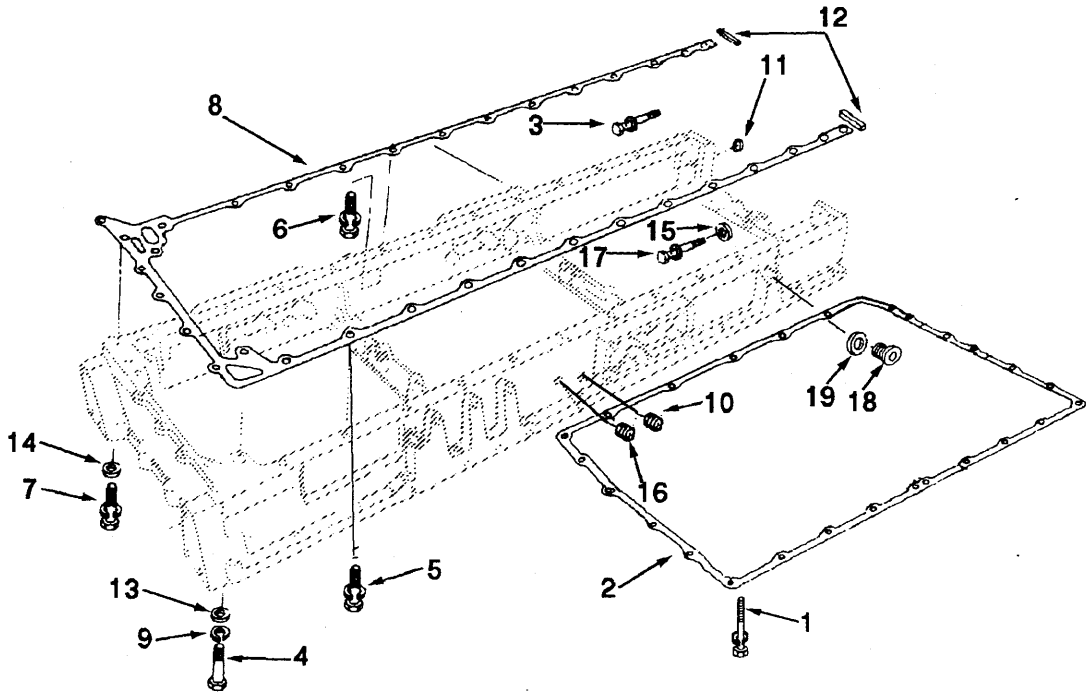
12
11
8
3
6
15
17
19
18
10
14
7
16
5
2
13
9
4
1
op400gn

Group No. 07.01 **Oil Pan** Option No. OP4716

| Ref No. | Part Number | Part Name | Req | Remarks |
|---|---|---|---|---|
| | | **OIL PAN** | | |
| | | **OPTION OP4716** | | Oil pan adapter mounting used less rear gear train. Gear cover plate design. |
| 1 | 3065723 | Screw, Captive Washer Cap | 28 | 3/8 - 16 x 1 3/4 inch |
| 2 | 3042590 | Gasket, Oil Pan | 1 | |
| 3 | 3035624 | Screw, Captive Washer Cap | 5 | 3/8 - 16 x 1 1/2 inch |
| 4 | 137980 | Screw, Hexagon Head Cap | 1 | 9/16 - 12 x 3 1/4 inch |
| 5 | 3012478 | Screw, Captive Washer Cap | 2 | 3/8 - 16 x 3 1/2 inch |
| 6 | 3033038 | Screw, Captive Washer Cap | 28 | 3/8 - 16 x 1 3/4 inch |
| 7 | 3012475 | Screw, Captive Washer Cap | 1 | 3/8 - 16 x 2 1/4 inch |
| 8 | 3042587 | Gasket, Oil Pan Adapter | 1 | |
| 9 | S-609 | Washer, Lock | 1 | |
| 10 | 3025460 | Plug, Pipe | 1 | |
| 11 | 153518 | Seal, Rectangular Ring | 4 | |
| 12 | 205241 | Seal, Rectangular Strip | 2 | |
| 13 | S-689 | Washer, Plain | 1 | |
| 14 | 127362 | Washer, Plain | 2 | |
| 15 | S-622 | Washer, Plain | 2 | |
| 16 | 3013786 | Plug, Pipe | 1 | |
| 17 | 3012481 | Screw, Captive Washer Cap | 2 | 7/16 - 14 x 1 1/2 inch |
| | 3046202 | Plug, Threaded | 2 | |
| 18 | (3040810) | Plug, Threaded | 1 | |
| 19 | 3046201 | Seal, O Ring | 1 | |

Group No. 01.05 **Piston & Conn Rod** Option No. PP4065

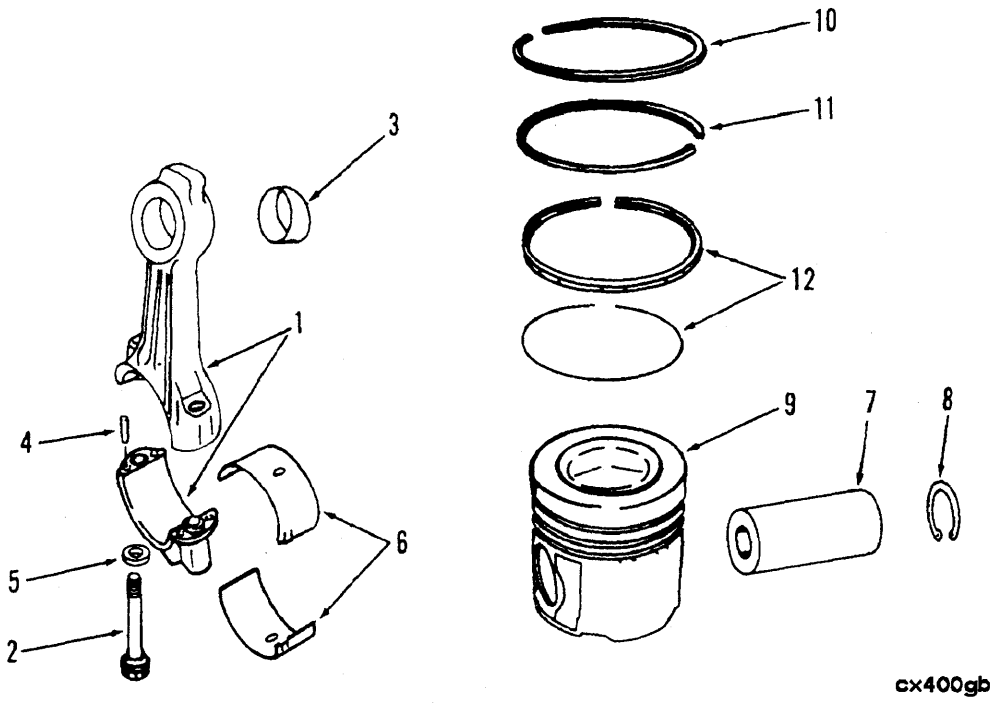


| Ref No. | Part Number | Part Name | Req | Remarks |
|---|---|---|---|---|
| | | **PISTON & CONNECTING ROD** | | |
| | | **OPTION PP4065** | | For the KT19-C and KT19-P. CPL: #0444 |
| | | **CONNECTING ROD** | | |
| 1 | 3043911 | Rod, Engine Connecting | 6 | |
| | (3000791) | Rod, Engine Connecting | 1 | |
| 2 | 3013265 | Screw, Connecting Rod Cap | 2 | 11/16 - 16 x 4.62 inches |
| 3 | 3043909 | Bushing | 1 | |
| 4 | 69558 | Dowel, Pin | 4 | |
| 5 | 205126 | Washer, Plain | 2 | |
| 6 | 205840 | Bearing, Connecting Rod | 2 | |
| 6 | 205841 | Bearing, Connecting Rod | A/R | .010 Inch oversize |
| 6 | 205842 | Bearing, Connecting Rod | A/R | .020 Inch oversize |
| 6 | 205843 | Bearing, Connecting Rod | A/R | .030 Inch oversize |
| | | **PISTON, PIN AND RINGS** | | |
| | 3803315 | Kit, Engine Piston | 6 | |
| 7 | 205200 | Pin, Piston | 1 | |
| 8 | 205269 | Ring, Retaining | 2 | |
| 9 | (3070707) | Piston, Engine | 1 | |
| | 3803472 | Set, Piston Ring | 6 | Standard |
| 10 | 3046227 | Ring, Compression Piston | 1 | Top |
| 11 | 3026595 | Ring, Compression Piston | 1 | Intermediate |
| 12 | 3025451 | Ring, Oil Piston | 1 | |

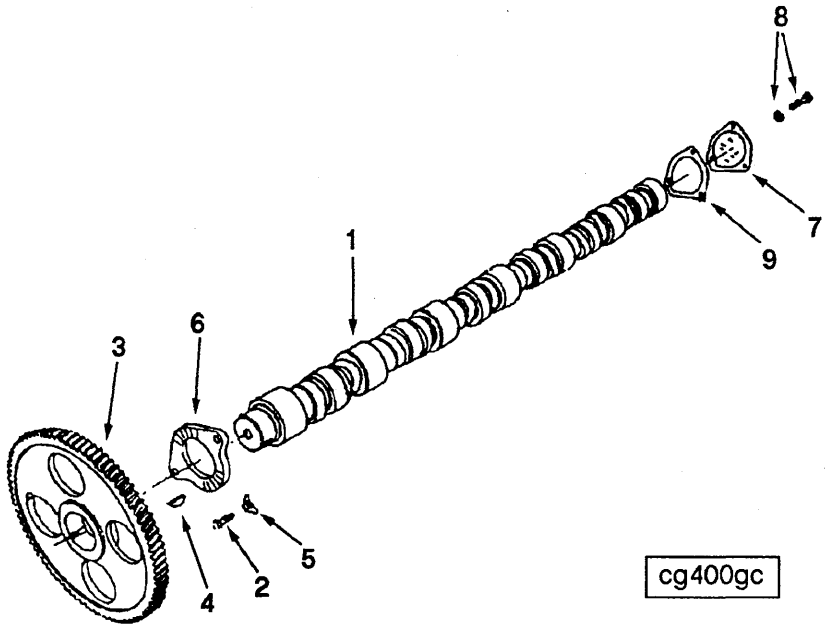


| Ref No. | Part Number | Part Name | Req | Remarks |
|---|---|---|---|---|
| | | **CAMSHAFT AND GEAR** | | |
| | | **OPTION PP4065** | | CPL: #0444 |
| | AR45075 | Camshaft | | |
| 1 | 3066877 | Camshaft | 1 | |
| 3 | 207248 | Gear, Camshaft | 1 | |
| 4 | S-302 | Key, Plain Woodruff | 1 | |
| 6 | 3007971 | Bearing, Camshaft Thrust | 1 | |
| | | **MOUNTING** | | |
| 2 | S-112 | Screw, Hexagon Head Cap | 2 | 3/8 - 16 x 1 inch |
| 5 | 68908 | Lockplate | 2 | |
| 7 | 207373 | Cover, Camshaft | 1 | |
| 8 | 3014766 | Screw, Captive Washer Cap | 3 | 3/8 - 16 x 1 inch |
| 9 | 3040722 | Gasket, Camshaft Cover | 1 | |

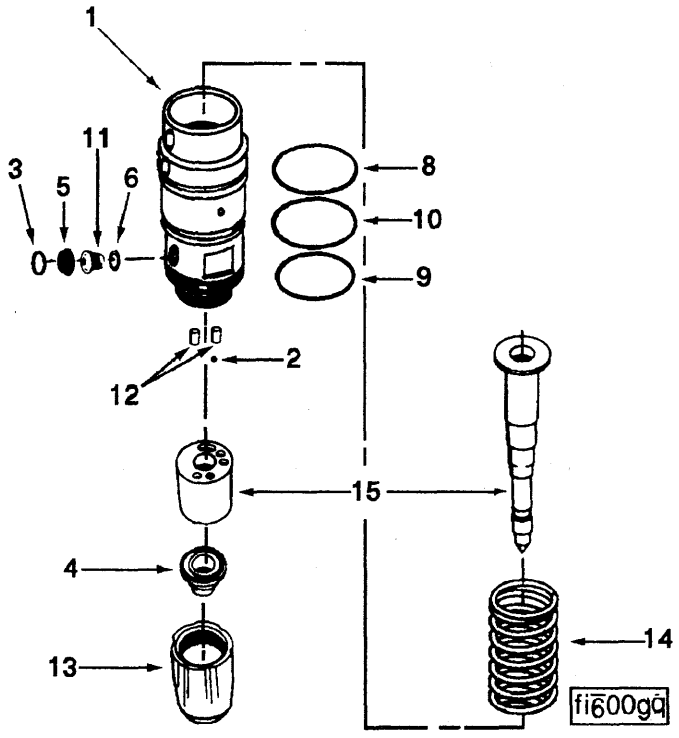
1
11
3
5
6
8
10
9
2
12
15
4
13
14
fi600gq

Group No. 06.01 **Injector** Option No. PP4065

| Ref No. | Part Number | Part Name | Req | Remarks |
|---|---|---|---|---|
| | | **INJECTOR** | | |
| | | **OPTION PP4065** | | RDF |
| | 3016675 | Injector | 12 | |
| 1 | 205463 | Adapter, Injector | 1 | |
| 2 | 167157 | Ball, Check | 1 | |
| 3 | 174299 | Retainer, Screen | 1 | |
| 4 | 3003933 | Cup, Injector | 1 | |
| 5 | 3008706 | Screen, Filter | 1 | |
| 6 | 173086 | Gasket, Injector | 1 | |
| 8 | 3010510 | Seal, O Ring | 1 | |
| 9 | 193736 | Seal, O Ring | 1 | |
| 10 | 205216 | Seal, O Ring | 1 | |
| 11 | (3045047) | Plug, Injector Orifice | 1 | |
| 12 | 203426 | Pin, Roll | 1 | |
| 13 | 207245 | Retainer, Injector Cup | 1 | |
| 14 | 205464 | Spring, Compression | 1 | |
| 15 | 3037292 | Barrel & Plunger | 1 | |
| | (3022498) | Plunger, Injector | 1 | |
| | (3037291) | Barrel, Injector | 1 | |

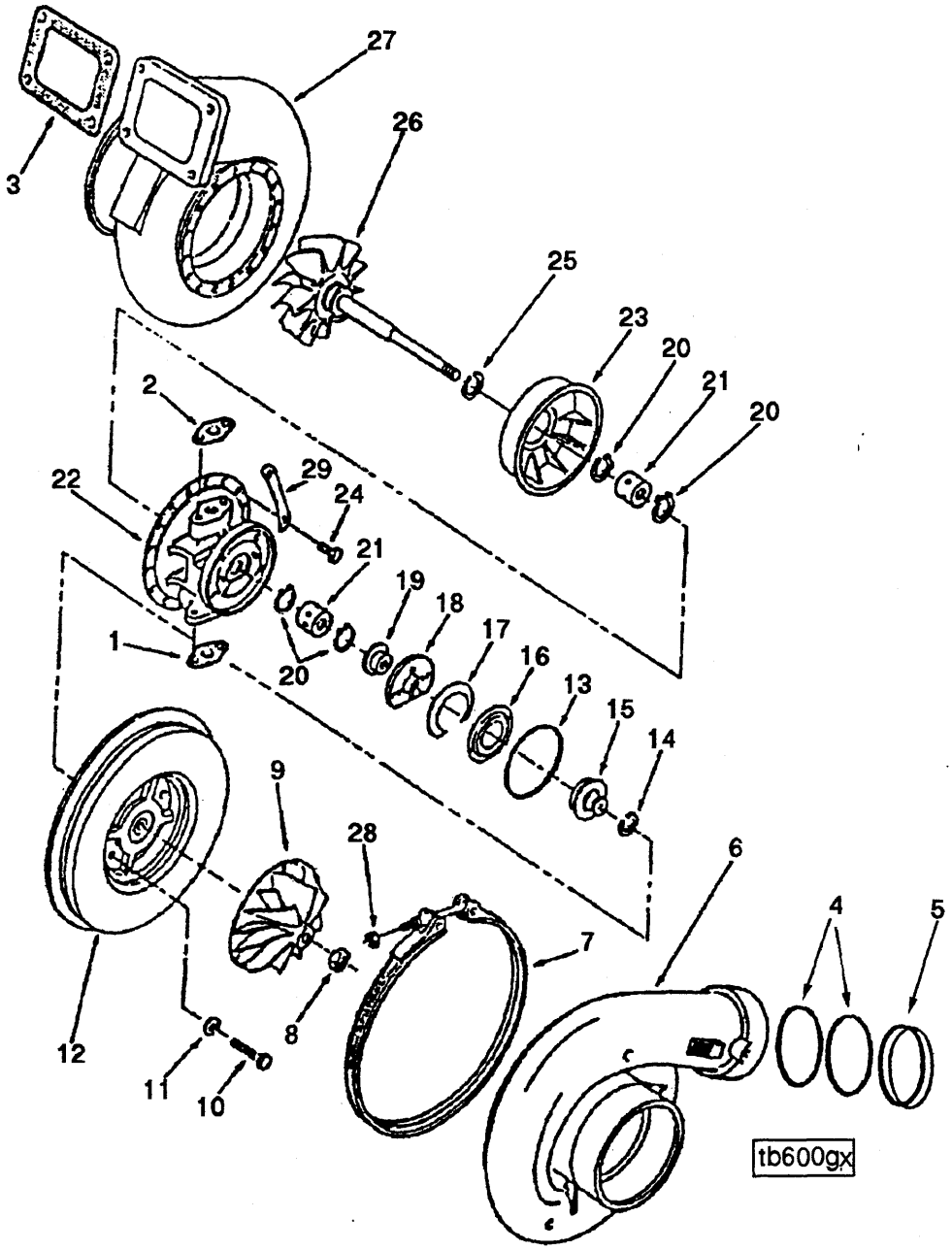
27
26
3
25
23
20
21
20
2
22
29
24
21
19
18
17
16
13
15
14
1
20
9
28
6
4
5
7
12
8
11
10
tb600gx

Group No. 10.06 **Turbocharger** Option No. PP4065

| Ref No. | Part Number | Part Name | Req | Remarks |
|---|---|---|---|---|
| | | **TURBOCHARGER** | | |
| | | **OPTION PP4065** | | CPL: #0444 |
| | 3803015 | Kit, Turbo | 1 | |
| 1 | 201048 | Gasket, Connection | 1 | |
| 2 | 201049 | Gasket, Connection | 1 | |
| 3 | 206576 | Gasket, Turbocharger | 1 | |
| 4 | 3023066 | Seal, O Ring | 2 | |
| 5 | 3023129 | Seal, Dust | 1 | |
| | 3525504 | Kit, Turbo | 1 | |
| 6 | (3525546) | Housing, Compressor | 1 | |
| 7 | 3522631 | Clamp, V Band | 1 | |
| 8 | 3519535 | Nut, Lock | 1 | |
| 9 | (3523553) | Impeller, Tur Compressor | 1 | |
| 10 | 3525073 | Screw, Hexagon Head Set | 4 | |
| 11 | 3504967 | Washer, Plain | 4 | |
| 12 | 3524862 | Diffuser, Turbocharger | 1 | |
| 13 | 3502449 | Seal, Rectangular Ring | 1 | |
| 14 | 3523412 | Seal, Split Ring | 1 | |
| 15 | 3523980 | Slinger, Oil | 1 | |
| 16 | 3524419 | Baffle, Oil | 1 | |
| 17 | 3524418 | Shim | 1 | |
| 18 | 3523306 | Bearing, Tur Thrust | 1 | |
| 19 | 3519623 | Collar, Thrust | 1 | |
| 20 | 3519641 | Ring, Retaining | 4 | |
| 21 | 3519627 | Bearing, Turbocharger | 2 | |
| 22 | 3523429 | Housing, Tur Bearing | 1 | |
| 23 | 3519783 | Shield, Turbocharger Heat | 1 | |
| 24 | 3521225 | Screw, Hexagon Head Set | 8 | |
| 25 | 3521442 | Seal, Split Ring | 1 | |
| 26 | 3521033 | Shaft & Wheel | 1 | |
| 27 | 3521174 | Housing, Turbine | 1 | |
| 28 | 3503335 | Nut, Regular Hexagon | 1 | |
| 29 | 3522904 | Lockplate | 4 | |
| | | **TURBO REPAIR KIT** | | |
| | 3803257 | Hc-5a Bearing/seal Kit | | |

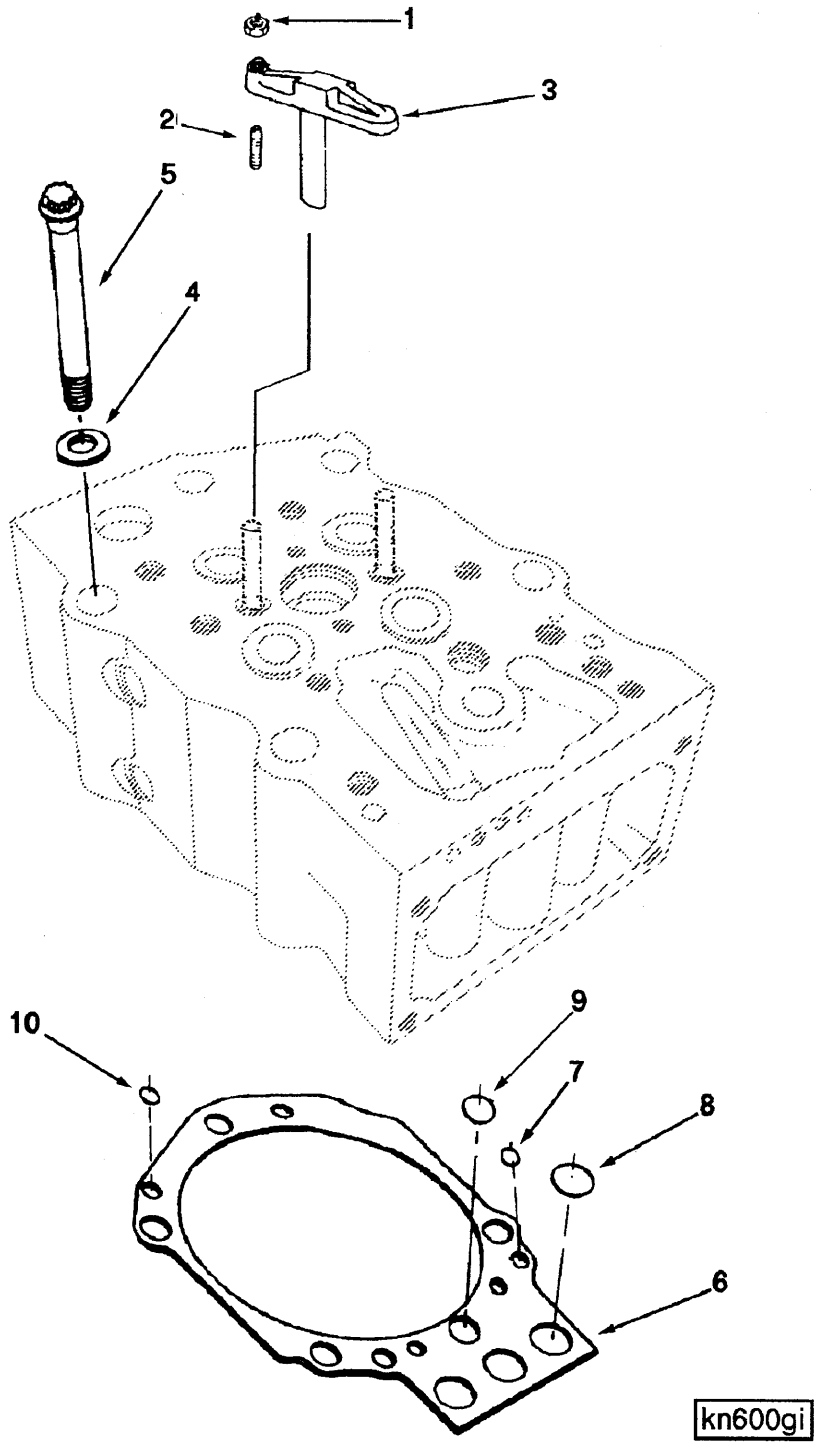
1
3
2
5
4
10
9
7
8
6
kn600gi

Group No. 02.01 **Cylinder Head** Option No. PP4065

| Ref No. | Part Number | Part Name | Req | Remarks |
|---|---|---|---|---|
| | | **CYLINDER HEAD MOUNTING** | | |
| | | **OPTION PP4065** | | |
| 1 | 203131 | Nut, Heavy Hexagon | 12 | 3/8 - 24 UNF |
| 2 | 3032697 | Screw, Crosshead Adjusting | 12 | 3/8 - 24 x 1 inch |
| 3 | 3048620 | Crosshead, Valve | 12 | |
| 4 | 205059 | Washer, Plain | 36 | |
| 5 | 3032633 | Screw, Twelve Point Cap | 36 | 3/4 - 16 X 8 inch |
| 6 | 3177412 | Gasket, Cylinder Head | 6 | |
| | (205479) | Gasket, Cylinder Head | 1 | |
| 7 | 205852 | Seal, Grommet | 1 | |
| 8 | 205855 | Seal, Grommet | 3 | |
| 9 | 205858 | Seal, Grommet | 1 | |
| 10 | 207448 | Seal, Grommet | 4 | |
| | | **OVERSIZE HEAD GASKET** | | |
| | 3062493 | Gasket, Cylinder Head | 1 | .020 Inch Oversize |
| | 3021465 | Seal, Grommet | 1 | |
| | 3021466 | Seal, Grommet | 3 | |
| | 3021467 | Seal, Grommet | 1 | |
| | 3021468 | Seal, Grommet | 4 | |

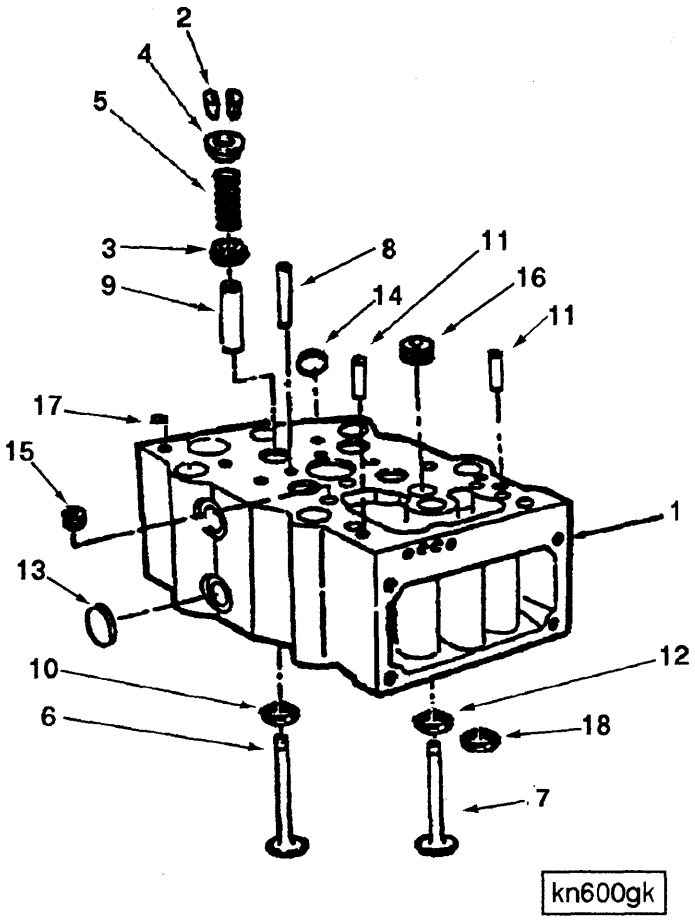
2
4
5
3
9
8
11
14
16
11
17
15
1
13
10
12
6
18
7
kn600gk

Group No. 02.01 **Cylinder Head** Option No. PP4709

| Ref No. | Part Number | Part Name | Req | Remarks |
|---|---|---|---|---|
| | | **CYLINDER HEAD** | | |
| | | **OPTION PP4709** | | Cylinder heads for standard power applications. |
| | 3068402 | Head, Cylinder | 16 | |
| 1 | (3176619) | Head, Cylinder | 1 | |
| 2 | 205091 | Collet, Valve | 8 | |
| 3 | 3001663 | Guide, Valve Spring | 4 | |
| 4 | 205094 | Retainer, Valve Spring | 4 | |
| 5 | 205208 | Spring, Valve | 4 | |
| 6 | 3035110 | Valve, Exhaust | 2 | |
| 7 | 207241 | Valve, Intake | 2 | |
| 8 | 205169 | Guide, Valve Crosshead | 2 | |
| 9 | 3202210 | Guide, Valve Stem | 2 | |
| 10 | 205093 | Insert, Valve | 2 | |
| 11 | 68445 | Pin, Groove | 2 | |
| 12 | 3026296 | Insert, Valve | 2 | |
| 13 | 205401 | Plug, Expansion | 8 | |
| 14 | 206224 | Plug, Expansion | 2 | |
| 15 | 3002158 | Plug, Pipe | 1 | |
| 16 | S-915-A | Plug, Pipe | 1 | |
| 17 | 203933 | Plug, Expansion | 1 | |

Group No. 03.01 **Rocker Lever & Housing** Option No. SS4010

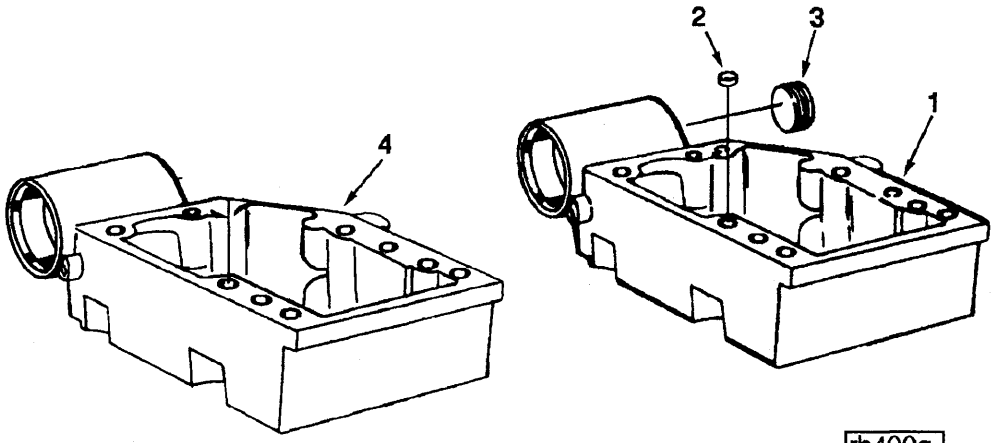


| Ref No. | Part Number | Part Name | Req | Remarks |
|---|---|---|---|---|
| | | **LIFTING ARRANGEMENT** | | |
| | | **OPTION SS4010** | | Includes bosses between rocker housings for lifting of engine. Rear rocker housing machined for mounting of air cleaner bracket. |
| 1 | 3202196 | Housing, Rocker Lever | 1 | |
| 2 | 205129 | Dowel, Ring | 6 | |
| 3 | S-995 | Plug, Pipe | 1 | |
| 4 | 3202193 | Housing, Rocker Lever | 5 | |

Group No. 13.05.1 **Starter Mounting** Option No. ST4011

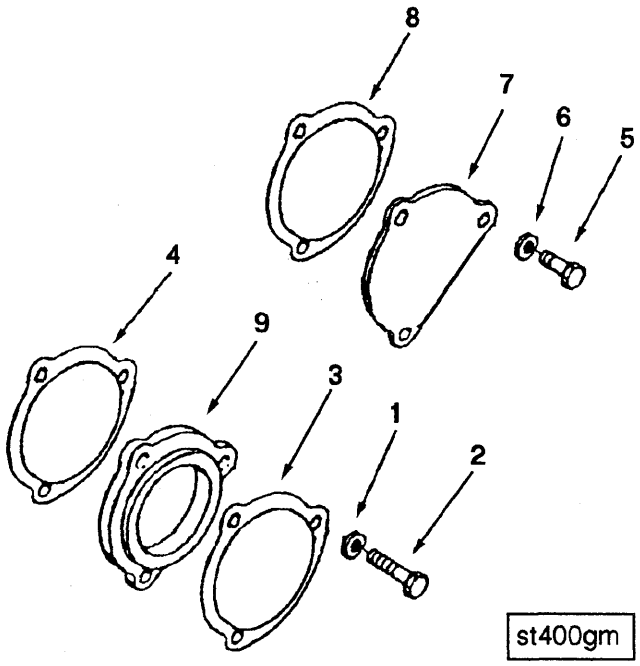


| Ref No. | Part Number | Part Name | Req | Remarks |
|---|---|---|---|---|
| | | **STARTER MOUNTING** | | |
| | | **OPTION ST4011** | | For SAE #1 flywheel housing with access slot and wet application. Mounts starter on right side of engine, facing flywheel. |
| 1 | S-603 | Washer, Lock | 3 | 5/8 inch |
| 2 | 202159 | Screw, Twelve Point Cap | 3 | 5/8 - 11 x 2 1/4 inches |
| 3 | 206395 | Gasket, Starter | 1 | |
| 4 | 3031007 | Gasket, Starter | 1 | |
| 5 | S-116 | Screw, Hexagon Head Cap | 3 | 5/8 - 11 x 1 1/2 inches |
| 6 | S-603 | Washer, Lock | 3 | 5/8 inch |
| 7 | 206389 | Cover, Starter Hole | 1 | |
| 8 | 3031007 | Gasket, Starter | 1 | |
| 9 | 206394 | Spacer, Starting Motor | 1 | |

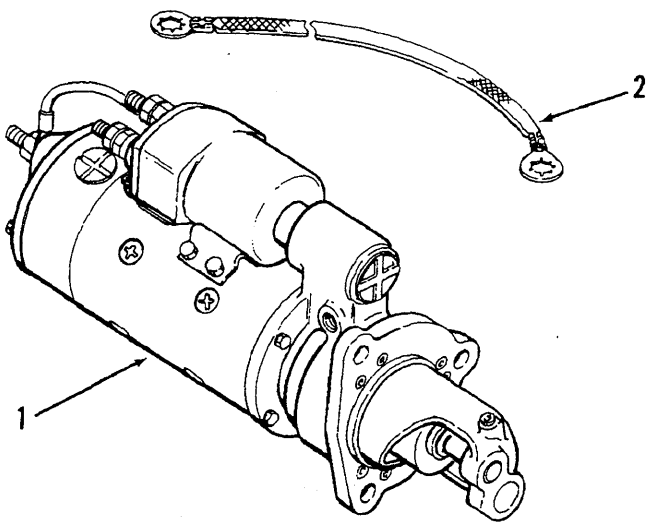


st100ga

| Ref No. | Part Number | Part Name | Req | Remarks |
|---|---|---|---|---|
| | | **STARTER** | | |
| | | **OPTION ST8023** | | 24volt electric starter DR50 MT300 277.5 degrees with ground strap. Has right hand rotation, positive engagement and is an insulated Delco Remy starter. Not to be used on K19 engines requiring aluminum flywheel housings. |
| 1 | 3021038 | Motor, Starting | 1 | |
| 2 | 3018924 | Wire, Ground | 1 | |

# NOTES

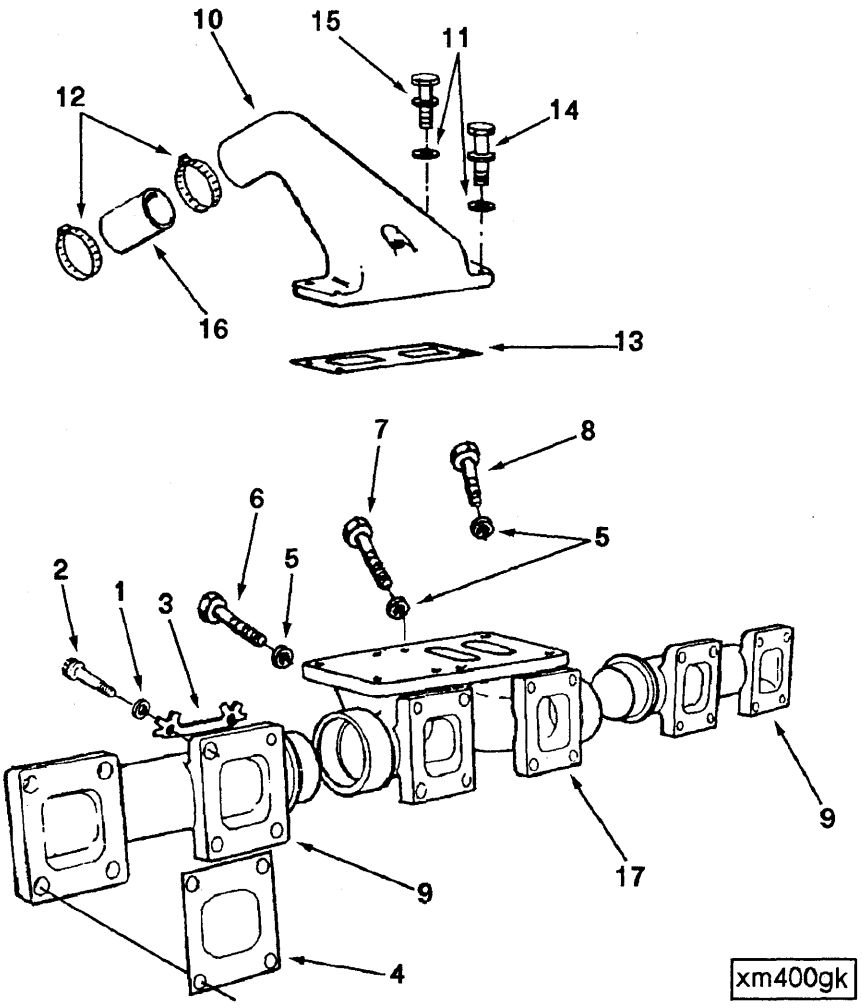
10
15
11
12
14
16
13
7
8
6
5
5
2
1
3
9
17
9
4
xm400gk

Group No. 11.01 **Exhaust Manifold** Option No. TB4024

| Ref No. | Part Number | Part Name | Req | Remarks |
|---|---|---|---|---|
| | | **EXHAUST MANIFOLD/TURBO MTG** | | |
| | | **OPTION TB4024** | | Dry exhaust manifold and air crossover for top mounted turbocharger with front out exhaust on KT only. Includes non-premium exhaust manifold mounting hardware. |
| 1 | 109594 | Washer, Plain | 8 | |
| 2 | 197032 | Screw, Hexagon Head Cap | 8 | 7/16 - 14 x 1 1/2 inches |
| 3 | 3001405 | Lockplate | 12 | |
| 4 | 3043097 | Gasket, Exhaust Manifold | 6 | |
| 5 | 109594 | Washer, Plain | 8 | |
| 6 | 197032 | Screw, Hexagon Head Cap | 4 | 7/16 - 14 x 1 1/2 inches |
| 7 | 3001404 | Screw, Hexagon Head Cap | 3 | 7/16 - 14 x 5 1/2 inches |
| 8 | 3202172 | Screw, Hexagon Head Cap | 1 | 7/16 - 14 x 5 inches |
| 9 | 205186 | Manifold, Exhaust | 2 | |
| 10 | 3016140 | Connection, Air Crossover | 1 | |
| 11 | 127362 | Washer, Plain | 5 | |
| 12 | 140315 | Clamp, T Bolt | 2 | |
| 13 | 206279 | Gasket, Connection | 1 | |
| 14 | 3012473 | Screw, Captive Washer Cap | 4 | 3/8 - 16 x 1 3/4 inches |
| 15 | 3012478 | Screw, Captive Washer Cap | 1 | 3/8 - 16 x 1 1/2 inches |
| 16 | 3016142 | Hose, Plain | 1 | |
| 17 | 3202173 | Manifold, Exhaust | 1 | |

Group No. 10.06.1 **Turbocharger Mounting** Option No. TB4735

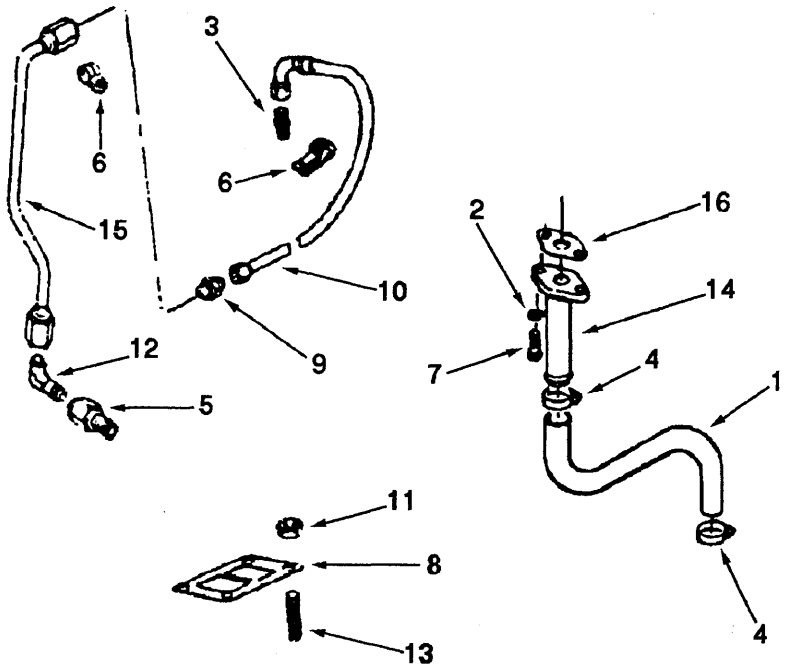


tb400gj

| Ref No. | Part Number | Part Name | Req | Remarks |
|---|---|---|---|---|
| | | **TURBOCHARGER MOUNTING** | | |
| | | **OPTION TB4735** | | Mounting and plumbing for top mounted Holset turbocharger with front out exhaust, dry or wet exhaust manifolds and without mounted torque converter cooler on KT or KTA. |
| 1 | AS1602500NF | Hose | 1 | |
| 2 | S-604 | Washer, Lock | 2 | |
| 3 | S-1039-A | Connector, Male | 1 | |
| 4 | 43828-A | Clamp, Hose | 2 | |
| 5 | 118346 | Union, Male | 1 | |
| 6 | 147991 | Clip | 2 | |
| 7 | 191772 | Screw, Twelve Point Cap | 2 | 3/8 - 16 - 1 1/4 inches |
| 8 | 206576 | Gasket, Turbocharger | 1 | |
| 9 | 206943 | Union, Adapter | 1 | |
| 10 | 215195 | Hose, Flexible | 1 | |
| 11 | 219138 | Nut, Regular Hexagon | 4 | |
| 12 | 3003536 | Coupling, Elbow Hose | 1 | |
| 13 | 3010915 | Stud | 4 | |
| 14 | 3200178 | Tube, Tur Oil Drain | 1 | |
| 15 | 3200273 | Tube, Tur Oil Supply | 1 | |
| 16 | 3202117 | Gasket, Connection | 1 | |

## NOTES

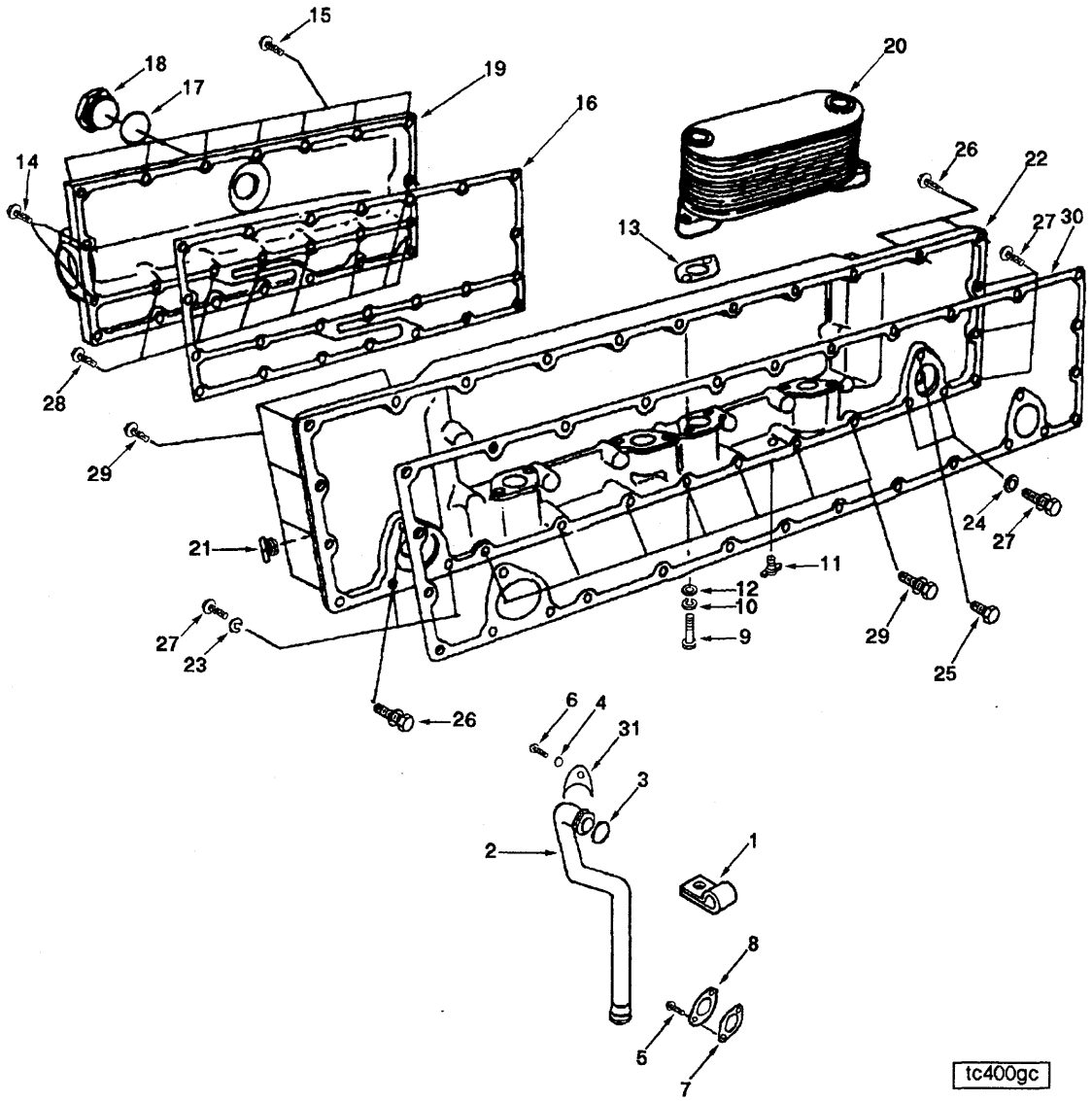
15
18
17
19
16
20
14
26
22
13
27
30
28
29
21
24
27
11
12
10
9
29
25
27
23
26
6
4
31
3
2
1
8
5
7
tc400gc

Group No. 07.05 **Lubricating Oil Cooler** Option No. TC4024

| Ref No. | Part Number | Part Name | Req | Remarks |
|---|---|---|---|---|
| | | **OIL COOLER** | | |
| | | **OPTION TC4024** | | Cast iron engine oil cooler with provisions to plumb water by-pass tube to bottom of radiator tank. For use with engine oil filters mounted on fuel pump side. |
| 1 | 3000900 | Clip | 1 | |
| 2 | 3011298 | Tube, Water Bypass | 1 | |
| 3 | 70624 | Seal, O Ring | 1 | |
| 4 | 146162 | Washer, Plain | 1 | |
| 5 | 3010596 | Screw, Captive Washer Cap | 2 | 3/8 - 16 x 1 1/4 inches |
| 6 | 3015283 | Screw, Captive Washer Cap | 1 | 5/16 - 18 x 3/4 inches |
| 7 | 3060912 | Gasket, Connection | 1 | |
| 8 | 3201884 | Plate, Cover | 1 | |
| | 3201155 | Cooler, Engine Cast | 1 | |
| 9 | S-103-C | Screw, Hexagon Head Cap | 8 | 3/8 - 24 x 3 3/4 inches |
| 10 | S-604 | Washer, Lock | 8 | |
| 11 | S-923-E | Draincock | 1 | |
| 12 | 127362 | Washer, Plain | 10 | |
| 13 | 206973 | Gasket, Oil Cooler Core | 4 | |
| 14 | 3012478 | Screw, Captive Washer Cap | 2 | 3/8 - 16 x 3 1/2 inches |
| 15 | 3042889 | Screw, Captive Washer Cap | 7 | 3/8 - 16 x 1 7/8 inches |
| 16 | 3065791 | Gasket, Tor Cnv Oil Cooler | 1 | |
| 17 | 145540 | Seal, O Ring | 1 | |
| 18 | 206256 | Plug, Threaded | 1 | |
| 19 | 3200988 | Cover, Lub Oil Cooler | 1 | |
| 20 | 3201785 | Core, Cooler | 2 | |
| 21 | 3202101 | Plug, Threaded | 2 | |
| 22 | 3202217 | Housing, Oil Cooler | 1 | |
| 23 | S-604 | Washer, Lock | 4 | |
| 24 | 127362 | Washer, Plain | 4 | |
| 25 | 205275 | Screw, Twelve Point Cap | 4 | 3/8 - 16 x 1 3/4 inches |
| 26 | 3033038 | Screw, Captive Washer Cap | 2 | 3/8 - 16 x 1 5/8 inches |
| 27 | 3040838 | Screw, Captive Washer Cap | 10 | 3/8 - 16 x 1 1/4 inches |
| 28 | 3042889 | Screw, Captive Washer Cap | 7 | 3/8 - 16 x 1 5/8 inches |
| 29 | 3042890 | Screw, Captive Washer Cap | 14 | 3/8 - 16 x 4 inches |
| 30 | 3200550 | Gasket, Lub Oil Clr Hsg | 1 | |
| 31 | 3201287 | Clip | 1 | |

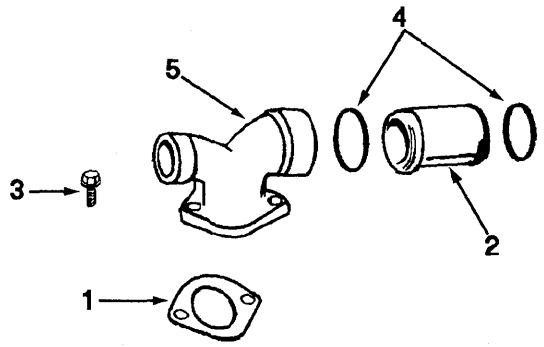


| Ref No. | Part Number | Part Name | Req | Remarks |
|---|---|---|---|---|
| | | **OIL COOLER CONNECTION** | | |
| | | **OPTION TC4701** | | Water pump to lub oil cooler standard connection. For KT engines. |
| | (AR45711) | Connection, Water Outlet | 1 | |
| 1 | 205289 | Gasket, Wtr Trf Connection | 1 | |
| 2 | 206998 | Tube, Water Transfer | 1 | |
| 3 | 3010596 | Screw, Captive Washer Cap | 2 | 3/8 - 16 x 1 1/4 inches |
| 4 | 3028291 | Seal, O Ring | 2 | |
| 5 | 3200211 | Connection, Water Outlet | 1 | |

Group No. 15.07 **Throttle Control** Option No. TL8001

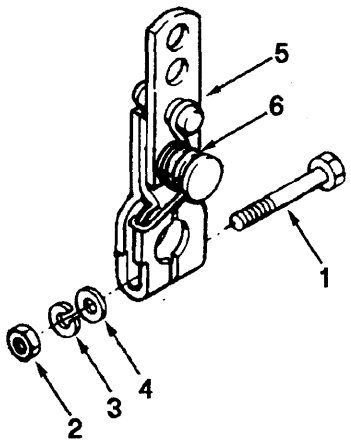


tl800gb

| Ref No. | Part Number | Part Name | Req | Remarks |
|---|---|---|---|---|
| | | **THROTTLE LEVER** | | |
| | | **OPTION TL8001** | | Two hole breakover type throttle lever with 0.34 inch diameter holes on 2.12 and 2.62 inch centers. Not compatible with VS fuel pump housing. |
| 1 | S-159-B | Screw, Hexagon Head Cap | 1 | 1/4-28 x 1 1/2 Inch |
| 2 | S-251 | Nut, Regular Hexagon Jam | 1 | 1/4-28 |
| 3 | S-600 | Washer, Lock | 1 | |
| 4 | 70704 | Washer, Plain | 1 | |
| 5 | 3048296 | Lever, Throttle | 1 | |
| 6 | 3024169 | Spring, Torsion | 1 | |

Group No. 08.08 **Water Filter** Option No. WF4001

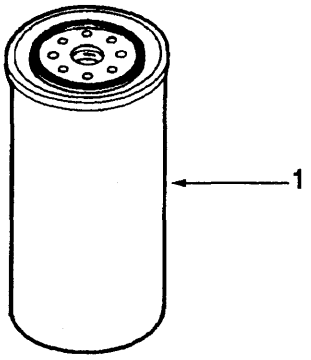


wf400ga

| Ref No. | Part Number | Part Name | Req | Remarks |
|---|---|---|---|---|
| | | **CORROSION RESISTOR** | | |
| | | **OPTION WF4001** | | Single spin-on cartridge mounted on water pump housing. For cooling systems at or below 100 quart capacity. |
| 1 | 3318319 | Resistor, Corrosion | 1 | Fleetguard WF2076 |

Group No. 08.07.1 **Water Connection** Option No. WI4001

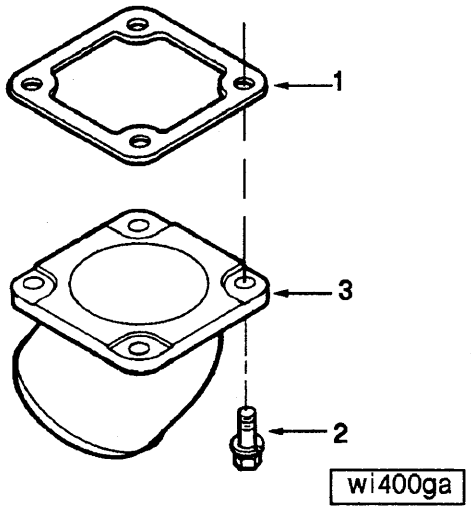


| Ref No. | Part Number | Part Name | Req | Remarks |
|---|---|---|---|---|
| | | **WATER INLET CONNECTION** | | |
| | | **OPTION WI4001** | | 3.50 inch outside diameter water inlet connection mounted behind the water pump pointing down. |
| 1 | 205288 | Gasket, Wtr Trf Connection | 1 | |
| 2 | 3010595 | Screw, Captive Washer Cap | 4 | 3/8 - 16 x 1 inch |
| 3 | 3007701 | Connection, Water Inlet | 1 | |

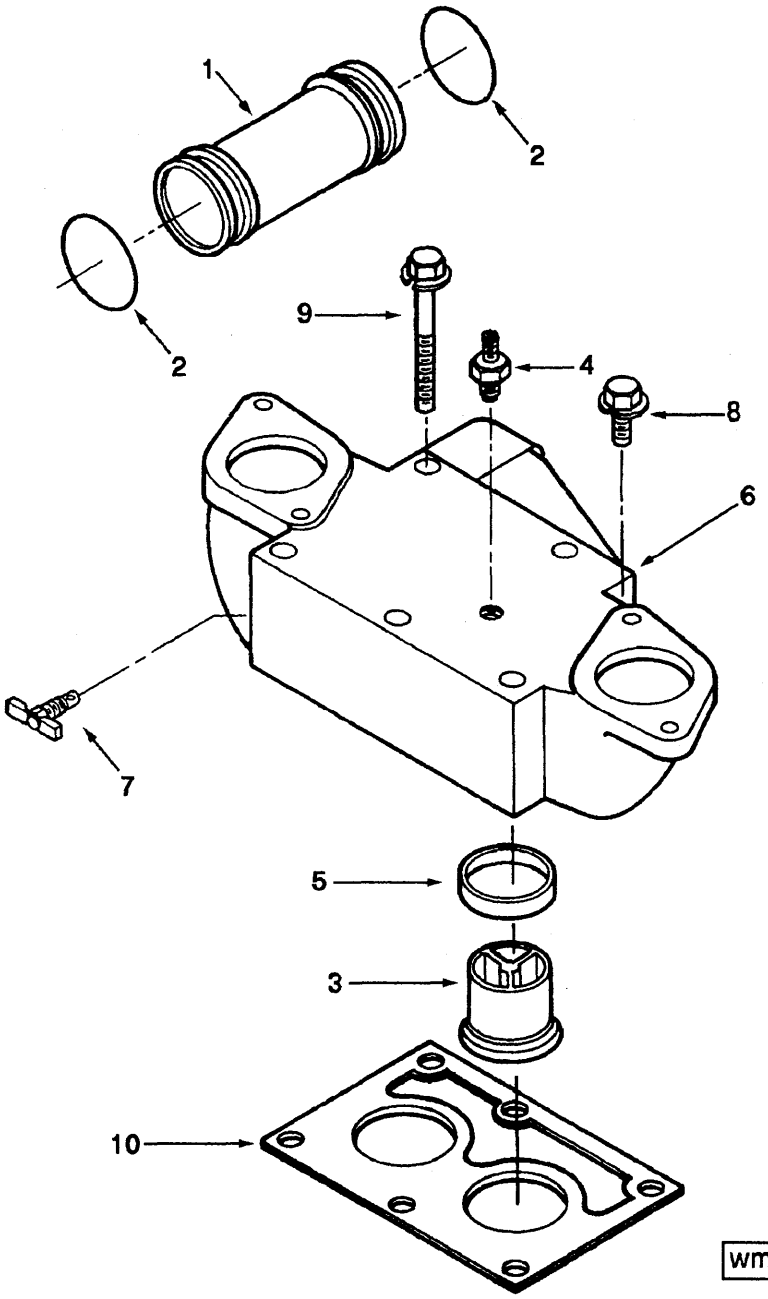
1
2
2
9
4
8
6
7
5
3
10
wm400ga

Group No. 08.06 **Water Manifold** Option No. WM4003

| Ref No. | Part Number | Part Name | Req | Remarks |
|---|---|---|---|---|
| | | **WATER MANIFOLD** | | |
| | | **OPTION WM4003** | | Water transfer tubes for dry exhaust gear cover plate design. |
| 1 | 207233 | Tube, Water Transfer | 5 | |
| 2 | 3028291 | Seal, O Ring | 10 | |
| 3 | 201737 | Thermostat | 2 | |
| | 3016721 | Housing, Thermostat | 1 | |
| 4 | 143950 | Connector, Male | 1 | |
| 5 | 186780 | Seal, Thermostat | 2 | |
| 6 | 3010933 | Housing, Thermostat | 1 | |
| 7 | S-962-E | Draincock | 1 | |
| 8 | 3010596 | Screw, Captive Washer Cap | 1 | 3/8 - 16 x 1 1/4 inches |
| 9 | 3010597 | Screw, Captive Washer Cap | 5 | 3/8 - 16 x 3 3/4 inches |
| 10 | 3010918 | Gasket, Thermostat Housing | 1 | |

Group No. 08.07.1 **Water Connection** Option No. WO4002

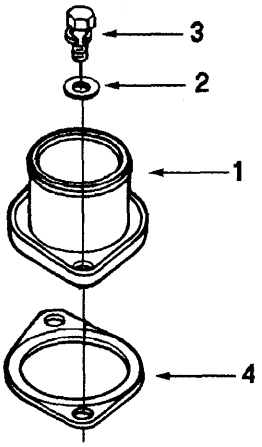


wo400ga

| Ref No. | Part Number | Part Name | Req | Remarks |
|---|---|---|---|---|
| | | **WATER OUTLET CONNECTION** | | |
| | | **OPTION WO4002** | | Dual 2.5 inch water outlet connections pointing up. |
| 1 | 3061003 | Connection, Water Outlet | 2 | |
| 2 | S-602 | Washer, Plain | 4 | |
| 3 | 3012470 | Screw, Captive Washer Cap | 4 | 3/8-16 x 3/4 Inch |
| 4 | 3060912 | Gasket, Connection | 2 | |

## NOTES

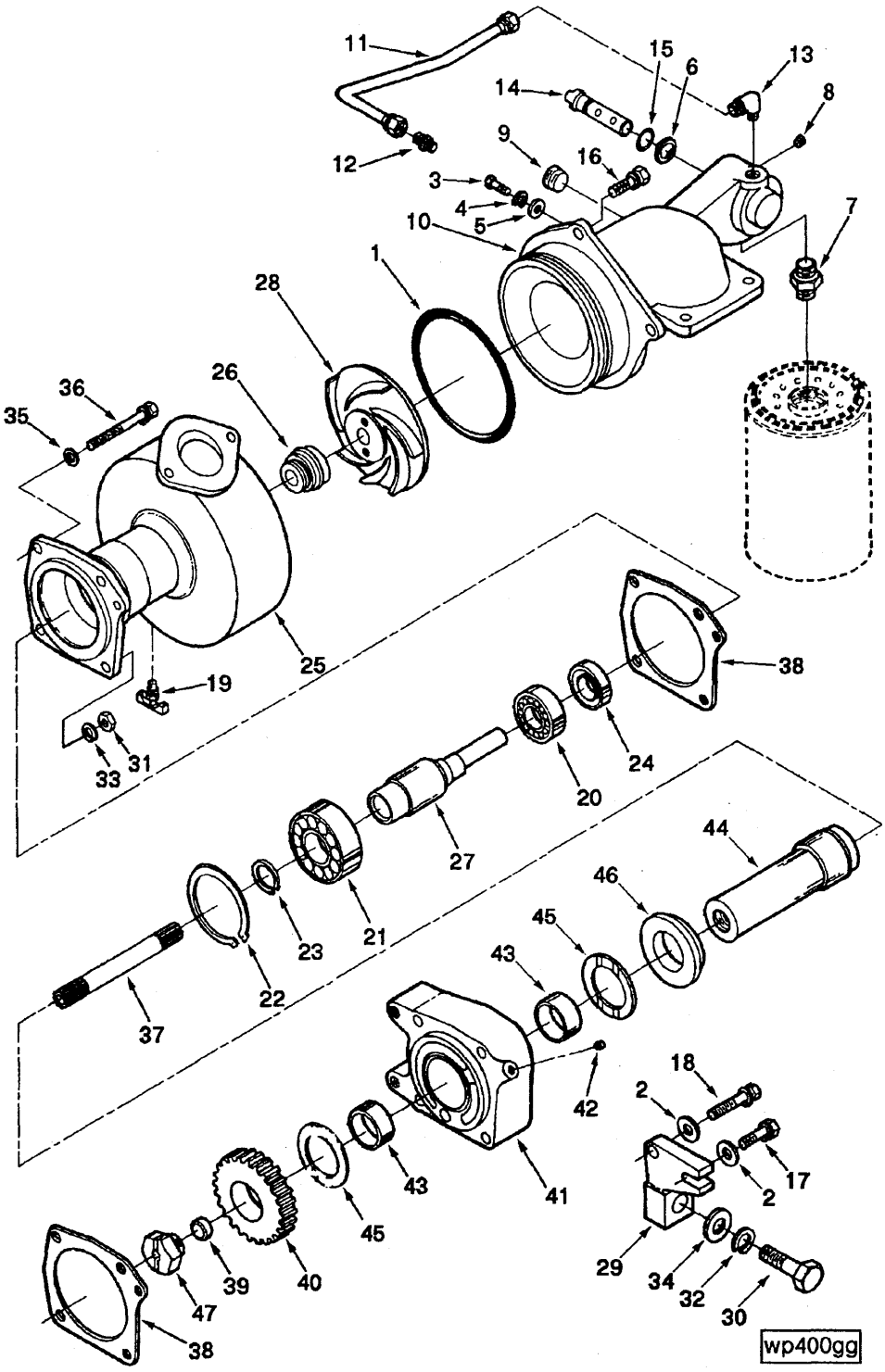
11
15
6
13
14
8
9
16
12
3
4
5
10
7
1
28
26
36
35
25
38
19
33
31
24
20
27
44
46
45
43
23
21
22
37
42
18
2
17
41
43
45
39
40
47
38
29
34
32
30
wp400gg

Group No. 08.01 **Water Pump** Option No. WP4009

| Ref No. | Part Number | Part Name | Req | Remarks |
|---|---|---|---|---|
| | | **WATER PUMP** | | |
| | | **OPTION WP4009** | | Water pump with provisions for pump mounted water filter. Gear cover plate design. |
| | 3011389 | Pump, Water | 1 | |
| 1 | 145623 | Seal, O Ring | 1 | |
| 2 | 3005594 | Washer, Plain | 2 | |
| | 3010529 | Connection, Water Inlet | 1 | |
| 3 | S-114 | Screw, Hexagon Head Cap | 1 | 1/4 - 20 x 3/4 inch |
| 4 | S-600 | Washer, Lock | 1 | |
| 5 | S-631 | Washer, Plain | 1 | |
| 6 | 205363 | Washer, Spring | 1 | |
| 7 | 206963 | Adapter, Filter Head | 1 | |
| 8 | 3008466 | Plug, Pipe | 1 | |
| 9 | 3008469 | Plug, Pipe | 1 | |
| 10 | 3010181 | Connection, Water Inlet | 1 | |
| 11 | 3010704 | Tube, Water Transfer | 1 | |
| 12 | 3201982 | Connector, Male | 1 | |
| 13 | 3201983 | Elbow, Male Adapter | 1 | |
| 14 | 3818849 | Shaft, Shutoff Valve | 1 | |
| 15 | 3818885 | Seal, O Ring | 1 | |
| 16 | 3010596 | Screw, Captive Washer Cap | 3 | 3/8 - 16 x 1 1/4 inches |
| 17 | (3012472) | Screw, Captive Washer Cap | 1 | 3/8 - 16 x 1 1/2 inches |
| 18 | 3012474 | Screw, Captive Washer Cap | 1 | 3/8 - 16 x 2 inches |
| | 3022920 | Pump, Water | 1 | |
| 19 | S-962-E | Draincock | 1 | |
| 20 | S-16002 | Bearing, Ball | 1 | |
| 21 | S-16069 | Bearing, Ball | 1 | |
| 22 | 70183 | Ring, Retaining | 1 | |
| 23 | 205258 | Ring, Retaining | 1 | |
| 24 | 206948 | Seal, Oil | 1 | |
| 25 | 206964 | Body, Water Pump | 1 | |
| 26 | 3033677 | Seal, Water Pump | 1 | |
| 27 | 3042827 | Shaft, Water Pump | 1 | |
| | (205158) | Shaft, Water Pump | 1 | |
| | (3040833) | Shaft, Water Pump | 1 | |
| 28 | 3056476 | Impeller, Water Pump | 1 | |
| 29 | 3036096 | Brace, Water Pump | 1 | |
| 30 | S-103-A | Screw, Hexagon Head Cap | 1 | 5/8 - 11 x 2 inches |
| 31 | S-205 | Nut, Regular Hexagon | 1 | |
| 32 | S-603 | Washer, Lock | 1 | |
| 33 | S-604 | Washer, Lock | 1 | |
| 34 | S-658 | Washer, Plain | 1 | |
| 35 | 127362 | Washer, Plain | 3 | |
| 36 | 3012476 | Screw, Captive Washer Cap | 3 | 3/8 - 16 x 3 inches |
| 37 | 3040832 | Shaft, Water Pump | 1 | |
| 38 | 3202283 | Gasket, Water Pump | 2 | |
| | 3025885 | Shaft, Water Pump | 1 | |
| 39 | 205498 | Plug, Oil | 1 | |
| 40 | 207251 | Gear, Water Pump | 1 | |
| 41 | 3007386 | Support, Water Pump | 1 | |
| 42 | S-965-E | Plug, Pipe | 1 | |
| 43 | 205156 | Bushing | 2 | |
| | (3007364) | Support, Water Pump | 1 | |
| 44 | 3801195 | Shaft, Wtr Pump | 1 | |
| | (3025887) | Shaft, Water Pump | 1 | |
| 45 | 3026556 | Bearing, Thrust | 2 | |
| 46 | 3034721 | Retainer, Shaft | 1 | |
| 47 | 3200968 | Plug, Threaded | 1 | |

Group No. 11.01.1 **Exhaust Connection** Option No. XS4003

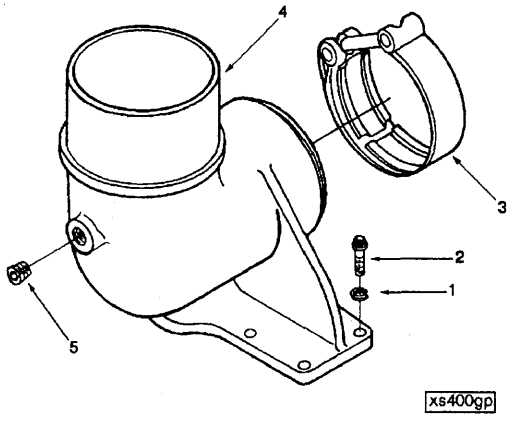


| Ref No. | Part Number | Part Name | Req | Remarks |
|---|---|---|---|---|
| | | **EXHAUST ELBOW** | | |
| | | **OPTION XS4003** | | Exhaust connection-90 degree elbow with exhaust manifold mounting flange for 6inch piping. |
| 1 | S-604 | Washer, Lock | 4 | |
| 2 | 191772 | Screw, Twelve Point Cap | 4 | 3/8 - 16 x 1 1/4 inches |
| 3 | 201989 | Clamp, V Band | 1 | |
| 4 | 207175 | Connection, Exhaust Outlet | 1 | |
| 5 | S-915-A | Plug, Pipe | 1 | |

Group No. 17.01 **Gasket Sets** Option No. 000000

| Ref No. | Part Number | Part Name | Req | Remarks |
|---|---|---|---|---|
| | | **UPPER ENGINE GASKET SET** | | |
| | 3801004 | Set, Upper Engine Gasket | 1 | KT-19 |
| | 100478 | Seal, O Ring | 2 | |
| | 131026 | Seal, O Ring | 12 | |
| | 201048 | Gasket, Oil Out | 1 | |
| | 201049 | Gasket, Oil In | 1 | |
| | 205852 | Seal, Grommet | 6 | |
| | 205855 | Seal, Grommet | 18 | |
| | 205858 | Seal, Grommet | 6 | |
| | 206277 | Gasket, Intake | 6 | |
| | 206279 | Gasket, Air Compressor | 1 | |
| | 206576 | Gasket, Turbo | 1 | |
| | 207038 | Seal, O Ring | 1 | |
| | 207244 | Seal, Injector | 6 | |
| | 207448 | Seal, Grommet | 24 | |
| | 3001340 | Seal, O Ring | 12 | |
| | 3002150 | Seal, Ferrule | 2 | |
| | 3014304 | Seal, Rectangular | 12 | |
| | 3023066 | Seal, O Ring | 2 | |
| | 3028291 | Seal, O Ring | 13 | |
| | 3040720 | Gasket, Valve | 6 | |
| | 3043097 | Gasket, Exhaust | 6 | |
| | 3070789 | Gasket, Rocker Lever | 6 | |
| | 3177412 | Gasket, Cylinder | 6 | |
| | 205479 | Gasket, Cylinder | 6 | |
| | 205852 | Seal, Gromet | 1 | |
| | 205855 | Seal, Gromet | 3 | |
| | 205858 | Seal, Gromet | 1 | |
| | 207448 | Seal, Gromet | 4 | |

Group No. 17.01 **Gasket Sets**

| Ref No. | Part Number | Part Name | Req | Remarks |
|---|---|---|---|---|
| | | **HEAD GASKET SET - SINGLE** | | |
| | 3015239 | Set, Single Head Gsk. | 1 | |
| | 100478 | Seal, O Ring | 12 | |
| | 131026 | Seal, O Ring | 12 | |
| | 205852 | Seal, Grommet | 1 | |
| | 205855 | Seal, Grommet | 3 | |
| | 206277 | Gasket, Intake Manifold | 6 | |
| | 206279 | Gasket, Connection | 1 | |
| | 206446 | Gasket, Wtr Trf Connection | 1 | |
| | 206576 | Gasket, Turbocharger | 1 | |
| | 207038 | Seal, O Ring | 1 | |
| | 207244 | Seal, Injector | 1 | |
| | 207448 | Seal, Grommet | 4 | |
| | 3001340 | Seal, O Ring | 12 | |
| | 3023066 | Seal, O Ring | 4 | |
| | 3026421 | Seal, O Ring | 2 | |
| | 3028291 | Seal, O Ring | 5 | |
| | 3040720 | Gasket, Rocker Lever Cover | 1 | |
| | 3040721 | Gasket, Cam Fol Housing | 1 | |
| | 3043097 | Gasket, Exhaust Manifold | 2 | |
| | 3070789 | Gasket, Rkr Lever Housing | 1 | |
| | 3177412 | Gasket, Cylinder Head | 1 | |
| | 205479 | Gasket, Cylinder Head | 1 | |
| | 205852 | Seal, Grommet | 1 | |
| | 205855 | Seal, Grommet | 3 | |
| | 205858 | Seal, Grommet | 1 | |
| | 3179027 | Gasket, Connection | 3 | |
| | 3818885 | Seal, O Ring | 2 | |

Group No. 17.01 **Gasket Sets** Option No. 000000

| Ref No. | Part Number | Part Name | Req | Remarks |
|---|---|---|---|---|
| | | **ENGINE GASKET SET** | | |
| | 3801006 | Gasket Set, Engine | | KT-19 |
| | 67946 | Washer, Plain | 3 | |
| | 70624 | Seal, O Ring | 2 | |
| | 145536 | Seal, O Ring | 1 | |
| | 145540 | Seal, O Ring | 2 | |
| | 145600 | Seal, O Ring | 1 | |
| | 153518 | Seal, Rectangular | 4 | |
| | 163654 | Seal, O Ring | 2 | |
| | 176027 | Gasket | 1 | |
| | 205061 | Gasket, Lub Pump | 1 | |
| | 205239 | Seal, Rectangular | 1 | |
| | 205247 | Seal, O Ring | 1 | |
| | 205288 | Gasket, Water | 1 | |
| | 205289 | Gasket, Water Outlet | 1 | |
| | 205791 | Gasket, Scavenger Pump | 1 | |
| | 205794 | Gasket, Barring | 1 | |
| | 205827 | Gasket, Barring | 1 | |
| | 205898 | Seal, O Ring | 2 | |
| | 206973 | Gasket, Cooler | 4 | |
| | 206978 | Seal, Rectangular | 1 | |
| | 207056 | Gasket, Aftercooler | 1 | |
| | 207058 | Gasket, Thermostat | 1 | |
| | 207075 | Gasket, Flange | 1 | |
| | 207117 | Gasket, Air Compressor | 1 | |
| | 207135 | Seal, Rectangular | 1 | |
| | 3001318 | Gasket, Gear Cover | 1 | |
| | 3002330 | Gasket, Seal Retainer | 1 | |
| | 3005885 | Seal, Rear Crank | 1 | |
| | 3007380 | Gasket, Hydraulic | 1 | |
| | 3007441 | Seal, O Ring | 6 | |
| | 3008403 | Gasket, Oil Suction | 1 | |
| | 3015067 | Seal, O Ring | 6 | |
| | 3016788 | Seal, Oil | 2 | |
| | 3016789 | Seal, Fan Hub | 1 | |
| | 3016792 | Seal, Front Crank | 1 | |
| | 3028291 | Seal, O Ring | 2 | |
| | 3029820 | Seal, O Ring | 1 | |
| | 3037282 | Gasket, Cover Plate | 1 | |
| | 3040721 | Gasket, Cam Cover | 6 | |
| | 3040722 | Gasket, Camshaft | 1 | |
| | 3042586 | Gasket, Hand Hole Cover | 3 | |
| | 3042588 | Gasket, Oil Pan | 1 | |
| | 3042590 | Gasket, Oil Pan | 1 | |
| | 3042612 | Gasket, Fan Hub | 1 | |
| | 3065790 | Gasket, Lub Oil Clr Hsg | 1 | |
| | 3065791 | Gasket, Tor Cnv Oil Cool | 1 | |
| | 3069103 | Gasket, Fuel Pump | 1 | |
| | 3069844 | Strip, Rectangular | 2 | |
| | 3200287 | Seal, Keyway | 1 | |
| | 3200977 | Gasket, Lub Oil Fltr Cvr | 1 | |
| | 3201125 | Seal, O Ring | 1 | |
| | 3201388 | Gasket, Compressor | 1 | |
| | 3201693 | Gasket, Acc Dr. Suppt. | 1 | |
| | 3201783 | Gasket, Water | 2 | |
| | 3201850 | Gasket, Air Compressor | 1 | |
| | 3202259 | Gasket, Adapter | 1 | |
| | 3202283 | Gasket, Water Pump | 1 | |
| | 3913994 | Seal, O Ring | 1 | |
| | 3919601 | Gasket, Acc Drive Cover | 1 | |

Group No. 17.01,
17.01.1

## Repair Kits

| Ref No. | Part Number | Part Name | Req | Remarks |
|---|---|---|---|---|
| | 3028434 | Kit, Liner | 1 | Standard |
| | 3028430 | Kit, Liner | 1 | .020 Inch O/S |
| | 3028431 | Kit, Liner | 1 | .040 Inch O/S |
| | 3028432 | Kit, Liner | 1 | .060 Inch O/S |
| | 3024726 | Kit, Liner | 1 | .083 Inch O/S |
| | 3028433 | Kit, Liner | 1 | .095 Inch O/S |
| | AR12270 | Shell, Main Bearing Std | 1 | Standard |
| | AR12271 | Shell, Main Bearing .010 | A/R | .010 Inch |
| | AR12272 | Shell, Main Bearing .020 | A/R | .020 Inch |
| | AR12273 | Shell, Main Bearing .030 | A/R | .030 Inch |
| | 3801004 | Set, Upper Engine Gsk. | 1 | |
| | 3801006 | Set, Lower Engine Gasket | 1 | |
| | 3015239 | Set, Single Head Gsk. | 1 | |
| | 3803315 | Kit, Engine Piston | 1 | |
| | 3803472 | Set, Piston Ring | 1 | |
| | 3010242 | Gasket Set, Fuel Pump | 1 | |
| | 3803153 | Kit W.P. Repair (Major) | 1 | |
| | 3803257 | Kit, Turbo RePair | 1 | |
| | 205840 | Bearing, Connecting Rod | 12 | Standard |
| | 205841 | Bearing, Connecting Rod | A/R | .010 Inch O/S |
| | 205842 | Bearing, Connecting Rod | A/R | .020 Inch O/S |
| | 205843 | Bearing, Connecting Rod | A/R | .030 Inch O/S |
| | 3006236 | Sleeve, Wear | 1 | |
| | 3006237 | Sleeve, Wear | 1 | |

# Option Index


| Option No. | Description | Page No. |
|---|---|---|
| AD4007 | Accessory Drive Pulley | 2 |
| AD4014 | Accessory Drive | 3 |
| BP4010 | Cam Follower | 15 |
| | Camshaft Idler Gear | 8 |
| | Crankshaft & Main Bearings | 11 |
| | Cylinder Block | 5, 7 |
| | Injector Mounting | 18 |
| | Lubricating Oil Pump | 17 |
| | Pump Idler | 8 |
| | Rocker Levers | 13 |
| BR4002 | Breather Location | 21 |
| DA4001 | Vibration Damper | 22 |
| EE4026 | Alternator Mounting | 25 |
| EM4058 | Front Engine Support | 27 |
| EM4703 | Gear Cover Mounting | 29 |
| FA4081 | Fan Drive Arrangement | 30 |
| FF4001 | Fuel Filter | 33 |
| FH4141 | Flywheel Housing | 35 |
| FH8713 | Mag Pickup Location Plug | 36 |
| FO4025 | Oil Fill Location | 37 |
| FP4815 | Fuel Pump Drive | 38 |
| FP4959 | Fuel Pump | 39 |
| FT40002 | Fuel Tubing | 41 |
| FV8010 | Fuel Shutoff Valve | 43 |
| FW4104 | Flywheel | 44 |
| HD4067 | Cover Plate | 47 |
| IM4005 | Intake Manifold | 48 |
| IM4716 | Intake Manifold | 49 |
| IM4719 | Intake Manifold Mounting | 50 |
| LF4011 | Oil Filter | 51 |
| OB4091 | Dipstick Tube | 52 |
| OB4841 | Hand Hole Covers | 53 |
| OB4935 | Dipstick | 54 |
| OP4022 | Oil Pan | 57 |
| OP4716 | Oil Pan | 59 |
| PP4065 | Camshaft And Gear | 61 |
| | Cylinder Head Mounting | 67 |
| | Injector | 63 |
| | Piston & Connecting Rod | 60 |
| | Turbocharger | 65 |
| PP4709 | Cylinder Head | 69 |
| SS4010 | Lifting Arrangement | 70 |
| ST4011 | Starter Mounting | 71 |
| ST8023 | Starter | 72 |
| TB4024 | Exhaust Manifold/turbo Mtg | 75 |
| TB4735 | Turbocharger Mounting | 76 |
| TC4024 | Oil Cooler | 79 |
| TC4701 | Oil Cooler Connection | 80 |
| TL8001 | Throttle Lever | 81 |
| WF4001 | Corrosion Resistor | 82 |
| WI4001 | Water Inlet Connection | 83 |
| WM4003 | Water Manifold | 85 |
| WO4002 | Water Outlet Connection | 86 |
| WP4009 | Water Pump | 89 |

| Option No. | Description | Page No. |
|---|---|---|
| XS4003 | Exhaust Elbow | 90 |

# INDEX


| Part No. | Description | Page No. |
|---|---|---|
| AR10626 | Shaft, Cam Follower | 15 |
| AR12110 | Damper, Fuel Pump & Mtg. | 39 |
| AR12270 | Shell, Main Bearing | 11, 94 |
| AR12271 | Shell, Main Bearing | 11, 94 |
| AR12272 | Shell, Main Bearing | 11, 94 |
| AR12273 | Shell, Main Bearing | 11, 94 |
| AR45075 | Camshaft | 61 |
| AS1003000SS | Hose | 33 |
| AS1602000NF | Hose | 53 |
| AS1602500NF | Hose | 76 |
| S-103-A | Screw, Hexagon Head Cap | 5, 35, 89 |
| S-103-C | Screw, Hexagon Head Cap | 79 |
| S-103-D | Screw, Hexagon Head Cap | 17, 47, 50 |
| S-106 | Screw, Hexagon Head Cap | 25 |
| S-112 | Screw, Hexagon Head Cap | 61 |
| S-113 | Screw, Hexagon Head Cap | 25 |
| S-114 | Screw, Hexagon Head Cap | 89 |
| S-116 | Screw, Hexagon Head Cap | 35, 71 |
| S-123-A | Screw, Hexagon Head Cap | 47 |
| S-125 | Screw, Hexagon Head Cap | 13 |
| S-126 | Screw, Hexagon Head Cap | 17 |
| S-127-C | Screw, Hexagon Head Cap | 5 |
| S-129 | Screw, Hexagon Head Cap | 57 |
| S-140 | Screw, Hexagon Head Cap | 41 |
| S-141 | Screw, Hexagon Head Cap | 17, 48 |
| S-156-B | Screw, Hexagon Head Cap | 41 |
| S-159-B | Screw, Hexagon Head Cap | 81 |
| S-173-A | Screw, Hexagon Head Cap | 27 |
| S-181-C | Screw, Hexagon Head Cap | 57 |
| S-189-C | Screw, Socket Head Cap | 43 |
| S-199-A | Screw, Hexagon Head Cap | 17 |
| S-199-B | Screw, Hexagon Head Cap | 29 |
| S-205 | Nut, Regular Hexagon | 38, 89 |
| S-212 | Nut, Regular Hexagon | 13 |
| S-217 | Nut, Heavy Hexagon | 41 |
| S-251 | Nut, Regular Hexagon Jam | 81 |
| S-253 | Nut, Regular Hexagon Jam | 25 |
| S-302 | Key, Plain Woodruff | 61 |
| S-316 | Key, Plain Woodruff | 3, 38 |
| S-600 | Washer, Lock | 81, 89 |
| S-602 | Washer, Plain | 29, 38, 57, 86 |
| S-603 | Washer, Lock | 5, 27, 35, 71, 89 |
| S-604 | Washer, Lock | 15, 17, 29, 38, 47, 48, 50 |
| S-607 | Washer, Lock | 41 |
| S-608 | Washer, Lock | 22 |
| S-609 | Washer, Lock | 59 |
| S-610 | Washer, Lock | 41, 57 |
| S-622 | Washer, Plain | 59 |
| S-631 | Washer, Plain | 35, 89 |
| S-658 | Washer, Plain | 5, 89 |
| S-689 | Washer, Plain | 59 |
| S-915-A | Plug, Pipe | 69, 90 |
| S-923-E | Draincock | 79 |
| S-962-E | Draincock | 85, 89 |
| S-965-E | Plug, Pipe | 27, 89 |
| S-1039-A | Connector, Male | 76 |
| S-1040-A | Elbow, Male Adapter | 27 |
| S-16002 | Bearing, Ball | 89 |
| S-16069 | Bearing, Ball | 89 |
| 4851 | Gear, Flywheel Ring | 44 |
| 9226 | Dowel, Flywheel Hsg | 5, 35 |
| 43828-A | Clamp, Hose | 53, 76 |
| 60408-L | Dowel, Pin | 5 |
| 67211 | Dowel, Rear Main Bearing | 5 |
| 67684 | Washer, Plain | 43 |
| 67946 | Washer, Plain | 93 |
| 68138 | Connector, Male | 41 |
| 68445 | Pin, Groove | 5, 69 |
| 68908 | Lockplate | 61 |
| 69324 | Washer, Plain | 41 |
| 69521 | Bushing | 17 |
| 69533 | Stop, Actuator | 51 |
| 69558 | Dowel, Pin | 60 |
| 70183 | Ring, Retaining | 89 |
| 70624 | Seal, O Ring | 79, 93 |
| 70645 | Dowel, Pin | 27 |
| 70704 | Washer, Plain | 41, 81 |
| 70760 | Dowel, Pin | 17 |
| 70897 | Nut, Lock | 25 |
| 100478 | Seal, O Ring | 41, 91, 92 |
| 102957 | Dowel, Diamond | 27 |
| 107948 | Dowel, Diamond | 17 |
| 107981 | Cap, Filler | 37 |
| 108602 | Screw, Hexagon Head Cap | 13 |
| 109594 | Washer, Plain | 75 |
| 111445 | Washer, Lock | 25 |
| 118226 | Screw, Socket Head Cap | 41 |
| 118346 | Union, Male | 76 |
| 123204 | Screw, Hexagon Head Cap | 50 |
| 124921 | Dowel | 5 |
| 127018 | Washer, Plain | 41 |
| 127362 | Washer, Plain | 5, 15, 25, 29, 41, 48, 50 |
| 128006 | Washer, Plain | 41 |
| 129069 | Nut, Lock | 57 |
| 129768 | Spring, Valve | 43 |
| 129826 | Body, Shutoff Valve | 43 |
| 129838 | Knob | 43 |
| 129839 | Shield, Shutoff Valve | 43 |
| 129859 | Elbow, Male Union | 33 |
| 129886 | Body, Shutoff Valve | 43 |
| 129888 | Seal, Rectangular Ring | 43 |
| 130083 | Bearing, Thrust | 8 |
| 131026 | Seal, O Ring | 91, 92 |
| 132770 | Bushing | 27 |
| 134076 | Solenoid | 43 |
| 137868 | Screw, Hexagon Head Cap | 50 |
| 137890 | Screw, Hexagon Head Cap | 57 |
| 137980 | Screw, Hexagon Head Cap | 59 |
| 140315 | Clamp, T Bolt | 75 |
| 143950 | Connector, Male | 49, 85 |
| 145536 | Seal, O Ring | 30, 93 |
| 145540 | Seal, O Ring | 79, 93 |
| 145600 | Seal, O Ring | 93 |
| 145623 | Seal, O Ring | 89 |
| 146162 | Washer, Plain | 79 |
| 147416 | Plug, Expansion | 5 |
| 147991 | Clip | 76 |
| 153518 | Seal, Rectangular Ring | 59, 93 |
| 154087 | Seal, Rectangular Ring | 43 |
| 156810 | Breather, Crankcase | 21 |
| 158829 | Screw, Hexagon Head Cap | 25 |
| 161737 | Pin, Roll | 51 |
| 163654 | Seal, O Ring | 93 |
| 167157 | Ball, Check | 63 |
| 168306 | Screw, Slotted Set | 13 |
| 172648 | Seal, Rectangular Ring | 35 |
| 173086 | Gasket, Injector | 63 |
| 174299 | Retainer, Screen | 63 |
| 175830 | Plug, Expansion | 5 |
| 176027 | Gasket | 93 |
| 176288 | Tee, Female Adapter | 41 |

# INDEX


| Part No. | Description | Page No. |
|---|---|---|
| 181213 | Elbow, Plain Adapter | 41 |
| 181466 | Washer, Lock | 43 |
| 186780 | Seal, Thermostat | 85 |
| 187556 | Screw, Fillister Head | 43 |
| 190397 | Sleeve, Wear | 3 |
| 191772 | Screw, Twelve Point Cap | 5, 76, 90 |
| 193736 | Seal, O Ring | 63 |
| 194037 | Socket, Rocker Lever | 13 |
| 197032 | Screw, Hexagon Head Cap | 75 |
| 200384 | Bearing, Roller | 30 |
| 200861 | Washer, Plain | 44 |
| 201048 | Gasket, Connection | 65, 91 |
| 201049 | Gasket, Connection | 65, 91 |
| 201737 | Thermostat | 85 |
| 201989 | Clamp, V Band | 90 |
| 202159 | Screw, Twelve Point Cap | 71 |
| 203131 | Nut, Heavy Hexagon | 67 |
| 203310 | Washer, Plain | 25 |
| 203426 | Pin, Roll | 63 |
| 203933 | Plug, Expansion | 13, 69 |
| 205021 | Cap, Main Bearing | 5 |
| 205022 | Cap, Main Bearing | 5 |
| 205023 | Cap, Main Bearing | 5 |
| 205052 | Shaft, Idler | 17 |
| 205057 | Body, Lubricating Oil Pump | 17 |
| 205059 | Washer, Plain | 5, 22, 67 |
| 205061 | Gasket, Lub Oil Pump | 17, 93 |
| 205065 | Shaft, Lub Pump Drive | 17 |
| 205068 | Pin, Cam Follower Roller | 15 |
| 205071 | Pin, Cam Follower Roller | 15 |
| 205075 | Cap, Main Bearing | 5 |
| 205080 | Plunger, Prs Regulator | 17 |
| 205091 | Collet, Valve | 69 |
| 205093 | Insert, Valve | 69 |
| 205094 | Retainer, Valve Spring | 69 |
| 205112 | Bearing, Thrust | 11 |
| 205115 | Seal, Crevice | 7 |
| 205126 | Washer, Plain | 60 |
| 205128 | Washer, Plain | 13 |
| 205129 | Dowel, Ring | 70 |
| 205133 | Bushing | 27 |
| 205140 | Bearing, Main | 11 |
| 205141 | Bearing, Main | 11 |
| 205142 | Bearing, Main | 11 |
| 205143 | Bearing, Main | 11 |
| 205150 | Bearing, Main | 11 |
| 205151 | Bearing, Main | 11 |
| 205152 | Bearing, Main | 11 |
| 205153 | Bearing, Main | 11 |
| 205156 | Bushing | 89 |
| 205160 | Bearing, Main | 11 |
| 205161 | Bearing, Main | 11 |
| 205162 | Bearing, Main | 11 |
| 205163 | Bearing, Main | 11 |
| 205169 | Guide, Valve Crosshead | 69 |
| 205170 | Bearing, Main | 11 |
| 205171 | Bearing, Main | 11 |
| 205172 | Bearing, Main | 11 |
| 205173 | Bearing, Main | 11 |
| 205186 | Manifold, Exhaust | 75 |
| 205200 | Pin, Piston | 60 |
| 205208 | Spring, Valve | 69 |
| 205216 | Seal, O Ring | 63 |
| 205227 | Plug, Expansion | 15 |
| 205239 | Seal, Rectangular Ring | 35, 93 |
| 205241 | Seal, Rectangular Strip | 59 |
| 205247 | Seal, O Ring | 35, 93 |
| 205258 | Ring, Retaining | 89 |
| 205269 | Ring, Retaining | 60 |
| 205275 | Screw, Twelve Point Cap | 79 |
| 205288 | Gasket, Wtr Trf Connection | 83, 93 |
| 205289 | Gasket, Wtr Trf Connection | 80, 93 |
| 205298 | Tube, Lub Oil Transfer | 5 |
| 205301 | Shaft, Cam Follower | 15 |
| 205345 | Pin, Roll | 17, 51 |
| 205346 | Spring, Compression | 51 |
| 205347 | Plunger, Bypass Valve | 51 |
| 205348 | Plunger, Pst Cooling Valve | 51 |
| 205350 | Plug, Retainer | 51 |
| 205363 | Washer, Spring | 89 |
| 205366 | Dowel, Diamond | 5 |
| 205375 | Screw, Twelve Point Cap | 29 |
| 205393 | Screw, Twelve Point Cap | 13 |
| 205394 | Screw, Twelve Point Cap | 13 |
| 205401 | Plug, Expansion | 69 |
| 205409 | Screw, Hexagon Head Cap | 35 |
| 205438 | Lockwire, Cam Roller Pin | 15 |
| 205439 | Ring, Retaining | 15 |
| 205462 | Link, Injector Plunger | 18 |
| 205463 | Adapter, Injector | 63 |
| 205464 | Spring, Compression | 63 |
| 205479 | Gasket, Cylinder | 91, 92 |
| 205498 | Plug, Oil | 89 |
| 205791 | Gasket, Scavenger Pump | 93 |
| 205794 | Gasket, Barring | 93 |
| 205827 | Gasket, Barring | 93 |
| 205840 | Bearing, Connecting Rod | 60, 94 |
| 205841 | Bearing, Connecting Rod | 60, 94 |
| 205842 | Bearing, Connecting Rod | 60, 94 |
| 205843 | Bearing, Connecting Rod | 60, 94 |
| 205852 | Seal, Grommet | 67, 91, 91, 92 |
| 205855 | Seal, Grommet | 67, 91, 91, 92 |
| 205858 | Seal, Grommet | 67, 91, 91, 92 |
| 205898 | Seal, O Ring | 17, 93 |
| 206202 | Nut, Jam | 25 |
| 206217 | Stud | 27 |
| 206218 | Stud | 27 |
| 206224 | Plug, Expansion | 69 |
| 206256 | Plug, Threaded | 79 |
| 206277 | Gasket, Intake Manifold | 50, 91, 92 |
| 206279 | Gasket, Connection | 75, 91, 92 |
| 206343 | Support, Front Engine | 27 |
| 206389 | Cover, Starter Hole | 71 |
| 206394 | Spacer, Starting Motor | 71 |
| 206395 | Gasket, Starter | 71 |
| 206397 | Bushing | 44 |
| 206446 | Gasket, Wtr Trf Connection | 92 |
| 206576 | Gasket, Turbocharger | 65, 76, 91, 92 |
| 206881 | Capscrew, Twelve Point | 22 |
| 206904 | Key, Woodruff | 11 |
| 206943 | Union, Adapter | 76 |
| 206948 | Seal, Oil | 89 |
| 206963 | Adapter, Filter Head | 89 |
| 206964 | Body, Water Pump | 89 |
| 206973 | Gasket, Oil Cooler Core | 79, 93 |
| 206978 | Seal, Rectangular | 93 |
| 206996 | Belt, V | 25 |
| 206998 | Tube, Water Transfer | 80 |
| 207038 | Seal, O Ring | 91, 92 |
| 207056 | Gasket, Aftercooler | 93 |
| 207058 | Gasket, Thermostat | 93 |
| 207075 | Gasket, Flange | 93 |
| 207079 | Support, Fan | 30 |
| 207112 | Flange, Weld | 41 |

# INDEX


| Part No. | Description | Page No. |
|---|---|---|
| 207117 | Gasket, Air Compressor | 41, 93 |
| 207135 | Seal, Rectangular Ring | 17, 93 |
| 207175 | Connection, Exhaust Outlet | 90 |
| 207226 | Bushing | 13 |
| 207233 | Tube, Water Transfer | 85 |
| 207241 | Valve, Intake | 69 |
| 207244 | Seal, Injector | 18, 91, 92 |
| 207245 | Retainer, Injector Cup | 63 |
| 207248 | Gear, Camshaft | 61 |
| 207251 | Gear, Water Pump | 89 |
| 207252 | Gear, Lubricating Oil Pump | 17 |
| 207253 | Gear, Accessory Drive | 38 |
| 207259 | Gear, Crankshaft | 11 |
| 207344 | Bushing | 13 |
| 207373 | Cover, Camshaft | 5, 61 |
| 207374 | Baffle, Oil | 35 |
| 207376 | Gasket, Oil Drain | 35 |
| 207378 | Tube, Water Transfer | 48 |
| 207442 | Connection, Fuel Block | 41 |
| 207448 | Seal, Grommet | 67, 91, 91, 92 |
| 207527 | Screw, Twelve Point Cap | 8 |
| 208084 | Rivet | 13 |
| 210029 | Capscrew, Twelve Point | 22 |
| 212013 | Head, Fuel Filter | 33 |
| 213559 | Socket, Cam Follower | 15 |
| 215195 | Hose, Flexible | 76 |
| 217322 | Damper, Vibration | 22 |
| 219065 | Baffle, Breather | 21 |
| 219138 | Nut, Regular Hexagon | 76 |
| 553856 | Gasket, Drain Plug | 36 |
| 3000175 | Hub, Jaw Coupling | 38 |
| 3000204 | Washer, Copper | 57 |
| 3000266 | Shaft, Shutoff Valve | 43 |
| 3000508 | Tube, Oil Gauge | 52 |
| 3000528 | Nut, Spring | 21 |
| 3000900 | Clip | 79 |
| 3001196 | Bearing, Thrust | 11 |
| 3001197 | Bearing, Thrust | 11 |
| 3001275 | Hub, Fan | 30 |
| 3001318 | Gasket, Gear Cover | 93 |
| 3001340 | Seal, O Ring | 41, 91, 92 |
| 3001404 | Screw, Hexagon Head Cap | 75 |
| 3001405 | Lockplate | 75 |
| 3001658 | Seal, Injector | 18 |
| 3001659 | Seal, Injector | 18 |
| 3001660 | Seal, Injector | 18 |
| 3001663 | Guide, Valve Spring | 69 |
| 3001811 | Screw, Twelve Point Cap | 41 |
| 3002150 | Seal, Ferrule | 41, 91 |
| 3002158 | Plug, Pipe | 69 |
| 3002330 | Gasket, Seal Retainer | 93 |
| 3002331 | Pulley, Alternator | 2 |
| 3002494 | Cover, Hand Hole | 53 |
| 3002834 | Bushing | 5 |
| 3002886 | Screw, Cam Follower Shaft | 15 |
| 3002993 | Dowel, Ring | 15 |
| 3003123 | Insert, Pump Drive | 47 |
| 3003536 | Coupling, Elbow Hose | 76 |
| 3003933 | Cup, Injector | 63 |
| 3004684 | Gear, Bushing Cam Idler | 8 |
| 3004685 | Gear, Bushing Wtr Pump Id | 8 |
| 3004686 | Bushing | 8 |
| 3005357 | Crankshaft | 11 |
| 3005594 | Washer, Plain | 89 |
| 3005885 | Seal, Rear Crank | 93 |
| 3005886 | Seal, Oil | 35 |
| 3006236 | Sleeve, Wear | 94 |
| 3006237 | Sleeve, Wear | 94 |
| 3006485 | Cover, Flywheel Housing | 35 |
| 3006696 | Clamp, Injector | 18 |
| 3006774 | Bracket, Alternator | 25 |
| 3007170 | Spring, Piston Cool Vlv | 51 |
| 3007380 | Gasket, Hydraulic Pump | 47, 93 |
| 3007386 | Support, Water Pump | 89 |
| 3007441 | Seal, O Ring | 93 |
| 3007517 | Nozzle, Piston Cooling | 5 |
| 3007632 | Plug, Expansion | 5 |
| 3007701 | Connection, Water Inlet | 83 |
| 3007971 | Bearing, Camshaft Thrust | 61 |
| 3008403 | Gasket, Oil Suc Connection | 57, 93 |
| 3008466 | Plug, Pipe | 50, 89 |
| 3008468 | Plug, Pipe | 48, 57 |
| 3008469 | Plug, Pipe | 48, 89 |
| 3008470 | Plug, Pipe | 5, 35, 51, 57 |
| 3008706 | Screen, Filter | 63 |
| 3009512 | Support, Accessory Drive | 38 |
| 3009620 | Spring, Engine Barring | 27 |
| 3009631 | Cover, Camshaft | 15, 37 |
| 3010181 | Connection, Water Inlet | 89 |
| 3010242 | Gasket Set, Fuel Pump | 94 |
| 3010247 | Cover, Valve | 21 |
| 3010396 | Cover, Rocker Lever | 21 |
| 3010510 | Seal, O Ring | 63 |
| 3010529 | Connection, Water Inlet | 89 |
| 3010595 | Screw, Captive Washer Cap | 33, 35, 53, 57, 83 |
| 3010596 | Screw, Captive Washer Cap | 25, 29, 33, 79, 80, 85, 89 |
| 3010597 | Screw, Captive Washer Cap | 25, 85 |
| 3010704 | Tube, Water Transfer | 89 |
| 3010915 | Stud | 76 |
| 3010918 | Gasket, Thermostat Housing | 85 |
| 3010933 | Housing, Thermostat | 85 |
| 3011046 | Connection, Oil Suction | 57 |
| 3011076 | Seal, D Ring | 7 |
| 3011298 | Tube, Water Bypass | 79 |
| 3011389 | Pump, Water | 89 |
| 3011693 | Plate, Cover | 50 |
| 3011716 | Screw, Captive Washer Cap | 53 |
| 3012467 | Washer, Plain | 30 |
| 3012470 | Screw, Captive Washer Cap | 86 |
| 3012472 | Screw, Captive Washer Cap | 47 |
| 3012473 | Screw, Captive Washer Cap | 75 |
| 3012474 | Screw, Captive Washer Cap | 89 |
| 3012475 | Screw, Captive Washer Cap | 59 |
| 3012476 | Screw, Captive Washer Cap | 29, 89 |
| 3012478 | Screw, Captive Washer Cap | 41, 59, 75, 79 |
| 3012481 | Screw, Captive Washer Cap | 59 |
| 3013265 | Screw, Connecting Rod Cap | 60 |
| 3013786 | Plug, Pipe | 41, 51, 59 |
| 3014103 | Washer, Plain | 38 |
| 3014226 | Shim | 7 |
| 3014227 | Shim | 7 |
| 3014228 | Shim | 7 |
| 3014229 | Shim | 7 |
| 3014230 | Shim | 7 |
| 3014304 | Seal, Rectangular Ring | 50, 91 |
| 3014668 | Seal, D Ring | 7 |
| 3014695 | Pulley, Accessory Drive | 3 |
| 3014766 | Screw, Captive Washer Cap | 5, 27, 41, 61 |
| 3015067 | Seal, O Ring | 5, 93 |
| 3015239 | Set, Single Head Gsk. | 92, 94 |
| 3015283 | Screw, Captive Washer Cap | 79 |

# INDEX


| Part No. | Description | Page No. |
|---|---|---|
| 3015525 | Ring, Retaining | 27 |
| 3015866 | Flywheel | 44 |
| 3016140 | Connection, Air Crossover | 75 |
| 3016142 | Hose, Plain | 75 |
| 3016675 | Injector | 63 |
| 3016721 | Housing, Thermostat | 85 |
| 3016734 | Drive Accessory | 38 |
| 3016788 | Seal, Oil | 27, 93 |
| 3016789 | Seal, Oil | 30, 93 |
| 3016792 | Seal, Oil | 27, 93 |
| 3016794 | Seal, Oil | 27 |
| 3016825 | Roller, Cam Follower | 15 |
| 3016826 | Roller, Cam Follower | 15 |
| 3017318 | Cover, Gear | 27 |
| 3017346 | Washer, Plain | 47 |
| 3017961 | Rod, Push | 15 |
| 3018914 | Guide, Barring Shaft | 27 |
| 3018924 | Wire, Ground | 72 |
| 3019152 | Gear, Engine Barring | 27 |
| 3019153 | Shaft, Barring | 27 |
| 3019961 | Nut, Plug | 27 |
| 3021038 | Motor, Starting | 72 |
| 3021465 | Seal, Grommet | 67 |
| 3021466 | Seal, Grommet | 67 |
| 3021467 | Seal, Grommet | 67 |
| 3021468 | Seal, Grommet | 67 |
| 3021977 | Idle Spring Pack | 39 |
| 3022920 | Pump, Water | 89 |
| 3023066 | Seal, O Ring | 65, 91, 92 |
| 3023129 | Seal, Dust | 65 |
| 3024169 | Spring, Torsion | 81 |
| 3024726 | Kit, Liner | 7, 94 |
| 3025451 | Ring, Oil Piston | 60 |
| 3025458 | Plug, Pipe | 5, 43, 51 |
| 3025460 | Plug, Pipe | 5, 27, 38, 41, 59 |
| 3025482 | Screw, Twelve Point Cap | 5 |
| 3025885 | Shaft, Water Pump | 89 |
| 3026296 | Insert, Valve | 69 |
| 3026421 | Seal, O Ring | 92 |
| 3026556 | Bearing, Thrust | 89 |
| 3026595 | Ring, Compression Piston | 60 |
| 3028291 | Seal, O Ring | 48, 80, 85, 91, 92, 93 |
| 3028324 | Valve, Check | 41 |
| 3028325 | Valve, Check | 41 |
| 3028347 | Barrel Plug Assembly | 39 |
| 3028430 | Kit, Liner | 7, 94 |
| 3028431 | Kit, Liner | 7, 94 |
| 3028432 | Kit, Liner | 7, 94 |
| 3028433 | Kit, Liner | 7, 94 |
| 3028434 | Kit, Liner | 7, 94 |
| 3029820 | Seal, O Ring | 51, 93 |
| 3030267 | Fuel Pump Front Cover | 39 |
| 3030970 | Disc, Valve | 43 |
| 3031007 | Gasket, Starter | 71 |
| 3031404 | Connector, Tube | 41 |
| 3032633 | Screw, Twelve Point Cap | 5, 67 |
| 3032697 | Screw, Crosshead Adjusting | 67 |
| 3032872 | Union, Male | 41 |
| 3033023 | Elbow, Male Union | 41 |
| 3033024 | Elbow, Male Union | 41 |
| 3033038 | Screw, Captive Washer Cap | 38, 59, 79 |
| 3033677 | Seal, Water Pump | 89 |
| 3033822 | Screw, Captive Washer Cap | 5 |
| 3034217 | Fuel Pump Gear Assembly | 39 |
| 3034578 | Adapter, Filter Head | 51 |
| 3034721 | Retainer, Shaft | 89 |
| 3035110 | Valve, Exhaust | 69 |
| 3035346 | Valve, Shutoff | 43 |
| 3035624 | Screw, Captive Washer Cap | 59 |
| 3036027 | Bracket, Filter | 33 |
| 3036096 | Brace, Water Pump | 89 |
| 3036805 | Housing, Flywheel | 35 |
| 3037282 | Gasket, Cover Plate | 27, 93 |
| 3037292 | Barrel & Plunger | 63 |
| 3039163 | Lever, Cam Follower | 15 |
| 3039164 | Lever, Cam Follower | 15 |
| 3040720 | Gasket, Rocker Lever Cover | 21, 91, 92 |
| 3040721 | Gasket, Cam Fol Housing | 15, 92, 93 |
| 3040722 | Gasket, Camshaft Cover | 5, 61, 93 |
| 3040832 | Shaft, Water Pump | 89 |
| 3040837 | Screw, Captive Washer Cap | 15 |
| 3040838 | Screw, Captive Washer Cap | 15, 30, 51, 57, 79 |
| 3042586 | Gasket, Hand Hole | 53, 93 |
| 3042587 | Gasket, Oil Pan Adapter | 59 |
| 3042588 | Gasket, Oil Pan | 93 |
| 3042590 | Gasket, Oil Pan | 59, 93 |
| 3042612 | Gasket, Fan Hub | 30, 93 |
| 3042827 | Shaft, Water Pump | 89 |
| 3042889 | Screw, Captive Washer Cap | 79 |
| 3042890 | Screw, Captive Washer Cap | 30, 79 |
| 3043097 | Gasket, Exhaust Manifold | 75, 91, 92 |
| 3043909 | Bushing | 60 |
| 3043911 | Rod, Engine Connecting | 60 |
| 3044413 | Screw, Captive Washer Cap | 21, 38 |
| 3044523 | Plate, Gear Cover | 27 |
| 3044762 | Gasket, Gear Cover | 29 |
| 3045136 | Washer, Plain | 38 |
| 3045137 | Screw, Hexagon Head Cap | 38 |
| 3045229 | Shaft, Accessory Drive | 38 |
| 3046200 | Spider, Jaw Coupling | 41 |
| 3046201 | Seal, O Ring | 53, 59 |
| 3046202 | Plug, Threaded | 27, 53, 59 |
| 3046227 | Ring, Compression Piston | 60 |
| 3046869 | Plug, Threaded | 57 |
| 3046942 | Plug, Threaded | 57 |
| 3046943 | Seal, O Ring | 57 |
| 3047548 | Cover, Lub Oil Pump | 17 |
| 3047549 | Pump, Lubricating Oil | 17 |
| 3048296 | Lever, Throttle | 81 |
| 3048341 | Gasket, Fuel Pump | 41 |
| 3048620 | Crosshead, Valve | 67 |
| 3049543 | Gear, Lubricating Oil Pump | 17 |
| 3053476 | Lever, Rocker | 13 |
| 3053477 | Lever, Rocker | 13 |
| 3053478 | Lever, Rocker | 13 |
| 3056476 | Impeller, Water Pump | 89 |
| 3057139 | Rod, Push | 15 |
| 3059831 | Plug, Drive | 27 |
| 3060545 | Block, Cylinder | 5 |
| 3060695 | Fuel Pump Housing | 39 |
| 3060703 | Assembly, Fuel Pump | 39 |
| 3060912 | Gasket, Connection | 79, 86 |
| 3061003 | Connection, Water Outlet | 86 |
| 3062415 | Spring, Compression | 17 |
| 3062493 | Gasket, Cylinder Head | 67 |
| 3064700 | Plate, Clamping | 57 |
| 3064701 | Plate, Clamping | 57 |
| 3064724 | Dipstick | 54 |
| 3065684 | Tube, Oil Gauge | 52 |
| 3065723 | Screw, Captive Washer Cap | 59 |
| 3065790 | Gasket, Lub Oil Clr Hsg | 93 |

# INDEX


| Part No. | Description | Page No. |
|---|---|---|
| 3065791 | Gasket, Tor Cnv Oil Cooler | 79, 93 |
| 3065950 | Screw, Captive Washer Cap | 21 |
| 3066528 | Pulley, Alternator | 25 |
| 3066877 | Camshaft | 61 |
| 3068402 | Head, Cylinder | 69 |
| 3069103 | Gasket, Fuel Pump | 93 |
| 3069844 | Strip, Rectangular | 93 |
| 3070789 | Gasket, Rocker Lever | 91, 92 |
| 3070961 | Screw, Hexagon Head Cap | 18 |
| 3176773 | Shaft, Rocker Lever | 13 |
| 3177412 | Gasket, Cylinder Head | 67, 91, 92 |
| 3179027 | Gasket, Connection | 92 |
| 3200069 | Bracket, Check Valve | 41 |
| 3200070 | Brkt Check Vlv | 41 |
| 3200103 | Tube, Fuel Supply | 41 |
| 3200178 | Tube, Tur Oil Drain | 76 |
| 3200211 | Connection, Water Outlet | 80 |
| 3200273 | Tube, Tur Oil Supply | 76 |
| 3200287 | Seal, Keyway | 3, 93 |
| 3200386 | Clamp, Tube | 41 |
| 3200387 | Clamp, Tube | 41 |
| 3200405 | Tube, Fuel Supply | 41 |
| 3200414 | Bracket, Oil Tube | 37 |
| 3200425 | Tube, Fuel Drain | 41 |
| 3200550 | Gasket, Lub Oil Clr Hsg | 79 |
| 3200630 | Support, Thm Housing | 48 |
| 3200642 | Plate, Clamping | 27 |
| 3200706 | Clip | 57 |
| 3200707 | Brace, Tube | 57 |
| 3200772 | Washer, Plain | 8, 47 |
| 3200934 | Plug, Retainer | 17 |
| 3200965 | Lube Oil Filter Head | 51 |
| 3200968 | Plug, Threaded | 89 |
| 3200977 | Gasket, Lub Oil Fil Cover | 51, 93 |
| 3200988 | Cover, Lub Oil Cooler | 79 |
| 3201060 | Cover, Hand Hole | 53 |
| 3201082 | Crankshaft, Engine | 11 |
| 3201115 | Tube, Fuel Supply | 41 |
| 3201125 | Seal, O Ring | 27, 51, 93 |
| 3201128 | Nut, Regular Hexagon | 29 |
| 3201155 | Cooler, Engine Cast | 79 |
| 3201185 | Link, Adjusting | 25 |
| 3201186 | Link, Adjusting | 25 |
| 3201187 | Link, Adjusting | 25 |
| 3201188 | Link, Adjusting | 25 |
| 3201287 | Clip | 79 |
| 3201388 | Gasket, Flange | 50, 93 |
| 3201517 | Gasket, Rkr Lever Housing | 13 |
| 3201583 | Plug, Threaded | 51 |
| 3201609 | Cover, Hyd Pump Flange | 47 |
| 3201614 | Spacer, Mounting | 41 |
| 3201693 | Gasket, Acc Drive Suppt. | 38, 93 |
| 3201737 | Tube, Fuel Drain | 41 |
| 3201749 | Gear & Shaft | 30 |
| 3201750 | Hub, Fan | 30 |
| 3201759 | Screw, Hexagon Head Cap | 36 |
| 3201783 | Gasket, Water | 93 |
| 3201785 | Core, Cooler | 79 |
| 3201850 | Gasket, Air Compressor | 93 |
| 3201884 | Plate, Cover | 79 |
| 3201982 | Connector, Male | 89 |
| 3201983 | Elbow, Male Adapter | 89 |
| 3201995 | Cover, Oil Pan Adapter | 57 |
| 3202101 | Plug, Threaded | 79 |
| 3202114 | Shaft, Idler | 5, 8 |
| 3202117 | Gasket, Connection | 76 |
| 3202152 | Pan, Oil | 57 |
| 3202153 | Adapter, Oil Pan | 57 |
| 3202155 | Manifold, Air Intake | 48 |
| 3202172 | Screw, Hexagon Head Cap | 75 |
| 3202173 | Manifold, Exhaust | 75 |
| 3202193 | Housing, Rocker Lever | 70 |
| 3202196 | Housing, Rocker Lever | 70 |
| 3202206 | Nut, Lock | 30 |
| 3202210 | Guide, Valve Stem | 69 |
| 3202217 | Housing, Oil Cooler | 79 |
| 3202259 | Gasket, Adapter | 57, 93 |
| 3202283 | Gasket, Water Pump | 89, 93 |
| 3203694 | Adapter, Crankshaft | 22 |
| 3251706 | Screw, Head Locking | 44 |
| 3279794 | Seal, O Ring | 43 |
| 3315847 | Filter, Fuel | 33 |
| 3318319 | Resistor, Corrosion | 82 |
| 3502449 | Seal, Rectangular Ring | 65 |
| 3503335 | Nut, Regular Hexagon | 65 |
| 3504967 | Washer, Plain | 65 |
| 3519535 | Nut, Lock | 65 |
| 3519623 | Collar, Thrust | 65 |
| 3519627 | Bearing, Turbocharger | 65 |
| 3519641 | Ring, Retaining | 65 |
| 3519783 | Shield, Turbocharger Heat | 65 |
| 3521033 | Shaft & Wheel | 65 |
| 3521174 | Housing, Turbine | 65 |
| 3521225 | Screw, Hexagon Head Set | 65 |
| 3521442 | Seal, Split Ring | 65 |
| 3522631 | Clamp, V Band | 65 |
| 3522904 | Lockplate | 65 |
| 3523306 | Bearing, Tur Thrust | 65 |
| 3523412 | Seal, Split Ring | 65 |
| 3523429 | Housing, Tur Bearing | 65 |
| 3523980 | Slinger, Oil | 65 |
| 3524418 | Shim | 65 |
| 3524419 | Baffle, Oil | 65 |
| 3524862 | Diffuser, Turbocharger | 65 |
| 3525073 | Screw, Hexagon Head Set | 65 |
| 3525504 | Kit, Turbo | 65 |
| 3801004 | Set, Upper Engine Gasket | 91, 94 |
| 3801006 | Gasket Set, Engine | 93, 94 |
| 3801195 | Shaft, Wtr Pump | 89 |
| 3803015 | Kit, Turbo | 65 |
| 3803153 | Kit W.P. Repair (Major) | 94 |
| 3803257 | Hc-5a Bearing/seal Kit | 65, 94 |
| 3803315 | Kit, Engine Piston | 60, 94 |
| 3803472 | Set, Piston Ring | 60, 94 |
| 3818849 | Shaft, Shutoff Valve | 89 |
| 3818885 | Seal, O Ring | 89, 92 |
| 3913994 | Seal, O Ring | 93 |
| 3919601 | Gasket, Acc Drive Cover | 93 |