PARTS CATALOG

ENGINE MODEL : QSB 6.7
ENGINE S/N : 46958952
C P L : 426







http://www.cummins.com
Copyright © 2000 - 2011 Cummins Inc. All rights reserved.

Engine Dataplate

BASE ENGINE INFORMATION	
Upfit	Original
Engine Serial Number	46958952
Shop Order #	SO68987
Plant	CNS - CONSOLIDATED DIESEL CO.
Build Date	28-Oct-08
Warranty Start Date	
Customer Number	75571
Customer Name	
ECM Code	Z90447.02
Fuel Pump Part #	4988594
Fuel Pump Calibration	GY51
Film Card	T
Engine Config #	D313001CC20
CPL #	CPL426
Marketing Model Name	QSB6.7
Service Model Name	QSB6.7 CM850

Table of Contents

Option Information (ORIGINAL)		
Option	**Spc Group**	**Group Name**
fs9841-02	05.19	Accessories,Fuel System
cp9548	12.01	Air Compressor
cp9568	12.01	Air Compressor Mounting
ic9454	10.01.2	Air Intake Connection
ic9488-01	10.01.2	Air Intake Connection Mtg
im9061-06	10.01	Air Intake Manifold
eh9469-02	13.02.3	Alternator Mounting
ap9510-03	01.06.1	Approval,Agency
ci9163	12.01.1	Arrangement,Cpr Air Inlet
tb91158-02	10.06.1	Arrangement,Turbocharger
vc9305	03.01.1	Arrangement,Valve Cover
wp97056-01	13.02.3	Belt Tensioner
bb9206-03	01.01	Block,Cylinder
hc9041-04	08.13.1	Cabin Heater Plumbing
pp40426	01.07	Camshaft
cc9232-03	12.01.3	Compressor Coolant Plumbing
pp40426-01	01.04	Connecting Rod And Piston
xs9136-03	11.01.1	Connection,Exhaust Outlet
wi9180-02	08.07.1	Connection,Water Inlet
ch9070-04	10.02	Cooling Heater Starting Aid
lc9261	07.05	Cooler,Engine Oil
tk9036-01	08.09	Cooler,Tor Converter Oil
gg9835	01.06	Cover,Front Gear
br9191-02	03.02	Crankcase Breather
bb9206	01.02	Crankshaft And Bearings
pp40426	02.01	Cylinder Head
fa9335-03	08.03	Drive,Fan
wr9392-01	05.06.1	Eng Control Wiring Harness
ph9203-01	05.06.1	Engine Control Module
rp9045-01	08.13.1	Engine Coolant Vent
fa9739-01	08.03	Fan Drive Mounting
sp9077	08.05	Fan Pilot Spacer
fw90082	16.02	Flywheel
fh9490-03	16.01	Flywheel Housing
fh9629	16.01	Flywheel Housing Mounting
fw9715	16.02.1	Flywheel Mounting
em9194	16.03	Front Engine Support
ff9541-01	06.04	Fuel Filter Location
ff9573-05	06.04.1	Fuel Filter Plumbing
ft9113-05	06.03	Fuel Plumbing
fp90312	05.01	Fuel Pump
lf9068-03	07.03	Full Flow Oil Filter
pp40426	06.01	Injector
pp40426	06.01.2	Injector Plumbing
rl9765-01	03.01	Lever,Rocker
la9145	17.06	Lifting Arrangement
la9147	17.06	Lifting Bracket Mounting

Option Information (ORIGINAL)		
Option	**Spc Group**	**Group Name**
dl9224-01	06.07	Location,Drain
lo9701	07.01.3	Lubricating Oil
lp9065	07.06	Lubricating Oil Pump
ob9169-03	07.02	Oil Filler Arrangement
lg90113	07.02	Oil Level Gauge
op9315-05	07.01	Oil Pan
ss9190	06.01	Paint
tp97519	10.06.2	Plumbing,Turbocharger
wp9757-02	08.01	Pump,Water
fr91436	99.01	Rating,Fuel
bb9132-02	01.06	Rear Gear Housing
4955230	17.01	Set,Lower Engine Gasket
4955229	17.01	Set,Upper Engine Gasket
sc98090	99.01	Software,Calibration
do90963	99.01	Software,Cus Interface
ec9045	08.07	Thermostat
pp98723	10.05	Turbocharger
pp98723	10.06	Turbocharger
bb9206	04.01	Valve Tappets
da9168-01	01.02.2	Vibration Damper
wo9064	08.07.1	Water Outlet Connection
wp9062	08.01	Water Pump Drive

ACCESSORIES,FUEL SYSTEM

Electronic Parts Catalog - Option Detail				
Option	Group	Graphic	Film Card	Date
FS9841-02	05.19	fs961gy	T	28-Oct-08
Engines	ISD4.5 CM2150, B5.9 LPG Plus CM556, G5.9, ISB 5.9 G CM2180, B4.5s, ISF3.8 CM2220 AN, ISB6.7 CM2250, B4.5 RGT, ISB CM800, QSB5.9-44 CM550, B5.9 G, G3.9, ISBe4 CM850, ISD6.7 CM2150, ISD6.7 CM2150 SN, QSB6.7 CM2250, QSB3.9-30 CM550, QSB5.9-30 CM550, B Gas Plus CM556, B6.7s, ISB CM2150, ISD4.5 CM2150 SN, ISB CM850, B LPG Plus CM556, B4.5, B3.9, ISF2.8 CM2220 AN, ISB6.7 CM2150 SN, QSB6.7 CM850, ISBe4 CM2150, G5.9 CM558, ISB6.7 CM2150 SQ, ISB4.5 CM2150 SN, ISB CM550, QSB5.9 CM850, B Gas International CM556, QSB4.5-30 CM550, ISBe CM800, ISBe5 CM2150 SN, QSB4.5 CM850, B5.9, ISBe CM850			

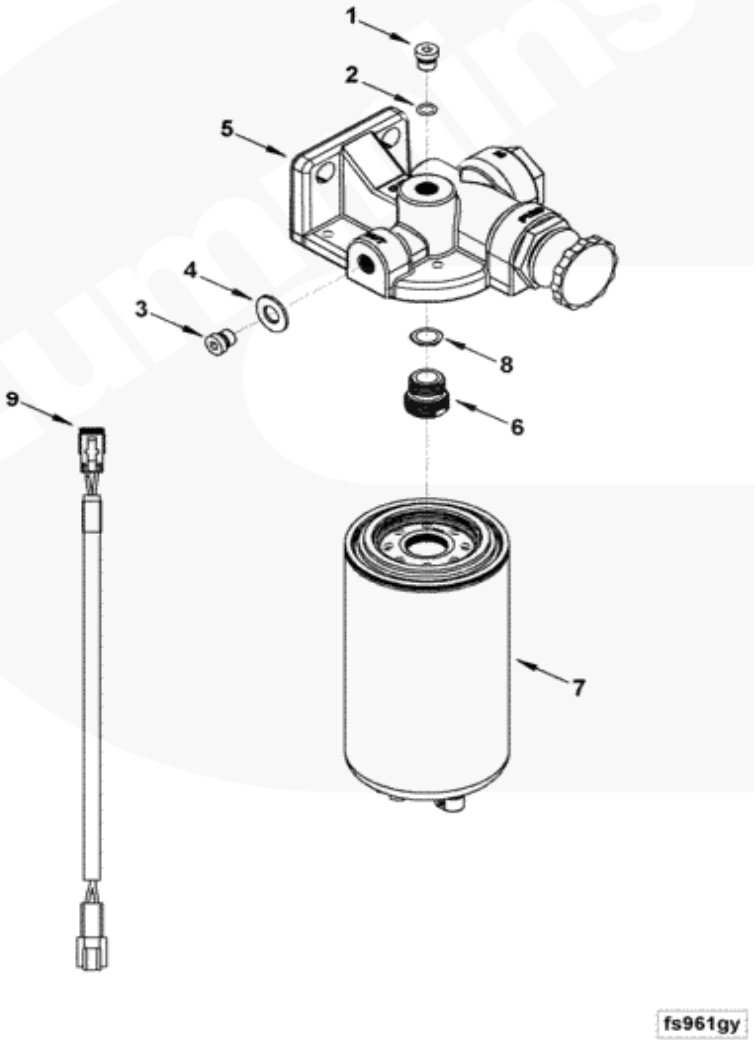

Ref No	Part Number	For-Sale	Shopping Cart	Part Name	Required	Remarks
	FS9841-02	NO		Fuel System Accessories		Fuel System Accessories
						element type; single element
						style: Spin-on priming
						provision: Yes drain
						provision: Yes fuel heater
						voltage: None water
						separator provision: Yes
						water in fuel sensor (wif):
						Yes water in fuel

						sensor(wif)harness provided:
						Yes water in fuel sensor
						harness length(FT): 6 FT
						Location: Off Engine
						Hose Length: None fuel pump
						inlet from pre filter: SAE
						j2044 absolute filtration
						(microns): 25
						Engine Family: "B" Series
	3678610	YES	ADD	Plug, Threaded	1	
1	3678602	NO		Plug, Threaded	1	
2	3678603	YES	ADD	Seal, O Ring	1	
3	4929619	YES	ADD	Plug, Threaded	1	
4	3963990	YES	ADD	Washer, Sealing	1	
	3975126	YES	ADD	Filter, Fuel	1	Individual Comp. Available
5	3975404	YES	ADD	Head, Fuel Filter	1	
6	3975405	YES	ADD	Adapter, Filter Head	1	Fleetguard P/N 394283401
7	3973233	YES	ADD	Filter, Fuel	1	Fleetguard P/N FS19732
8	4946959	YES	ADD	Gasket, Filter	1	Fleetguard #033384900
9	4995590	YES	ADD	Harness, Wiring	1	

AIR COMPRESSOR

Electronic Parts Catalog - Option Detail				
Option	Group	Graphic	Film Card	Date
CP9548	12.01	cp963gc	T	9-Jan-07
Engines	ISD4.5 CM2150, B5.9 LPG Plus CM556, G5.9, ISB 5.9 G CM2180, B4.5s, ISF3.8 CM2220 AN, ISB6.7 CM2250, B4.5 RGT, ISB CM800, QSB5.9-44 CM550, B5.9 G, G3.9, ISBe4 CM850, ISD6.7 CM2150, ISD6.7 CM2150 SN, QSB6.7 CM2250, QSB3.9-30 CM550, QSB5.9-30 CM550, B Gas Plus CM556, B6.7s, ISB CM2150, ISD4.5 CM2150 SN, ISB CM850, B LPG Plus CM556, B4.5, B3.9, ISF2.8 CM2220 AN, ISB6.7 CM2150 SN, QSB6.7 CM850, ISBe4 CM2150, G5.9 CM558, ISB6.7 CM2150 SQ, ISB4.5 CM2150 SN, ISB CM550, QSB5.9 CM850, B Gas International CM556, QSB4.5-30 CM550, ISBe CM800, ISBe5 CM2150 SN, QSB4.5 CM850, B5.9, ISBe CM850			

©Cummins Inc

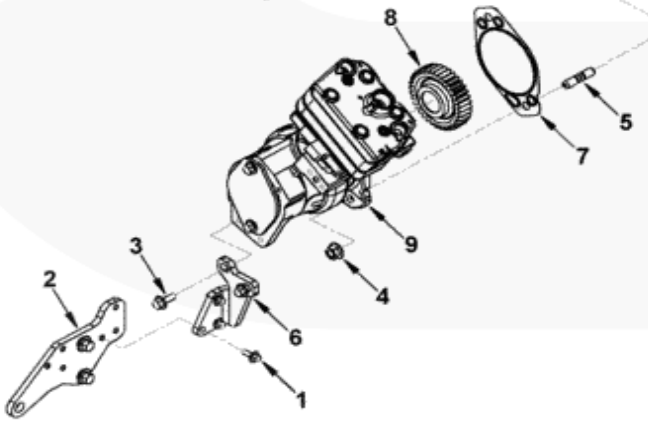

cp963gc

Ref No	Part Number	For-Sale	Shopping Cart	Part Name	Required	Remarks
	CP9548	NO		Air Compressor		Air Compressor
						CPR Manufacturer/model:
						Wabco 250cc
						Cylinders: 1
						Method Of Cooling: Water
						CFM: 15.2
						CPR Rear Drive: Gear
						CPR Front Flange: SAE "B"

						(5.750in)
						CPR Rear Flange: 82-B (SAE
						A)
						CPR Rear Mount Thread:
						Metric air compressor
						location: High fuel pump
						location: Low
						Water Inlet: Top
						Water Outlet: Top
						Air Outlet: Side
						Air Outlet Port Size: M27-2
						Air Inlet: Top
						CPR SAE/din Standard Rear
						Drive: SAE 19-4
						CPR Max Thru Torque: 105 FT
						LB
						Max CPR Speed (RPM): 3000
						CPR Max Inlet Temp (deg F):
						250
						CPR Turbocharged: Yes
						CPR Supplier: Cummins
						Rear Support Mounting
						Location: 588.74mm from
						front face of block
						compressor length (mm):
						162.5
						Design Phase: Echo oil
						return provision: Rear gear
						housing. Drive centerline
						from crank centerline (mm):
						278.35
						Engine Family: "B" Series.
1	3900630	YES	ADD	Screw, Hexagon Flange Head Cap	3	M8 X 1.25 X 20
2	3959312	YES	ADD	Brace, Air Compressor	1	
3	3902460	YES	ADD	Screw, Hexagon Flange Head Cap	2	M10 X 1.50 X 25
4	3903210	YES	ADD	Nut, Hexagon Flange	2	M12 X 1.75
5	3905371	YES	ADD	Stud	2	
6	3955094	YES	ADD	Brace, Air Compressor	1	
7	4896897	YES	ADD	Gasket, Accessory Drive Cover	1	
	4946291	YES	ADD	Compressor, Air	1	Recon equivalent 4946291 RX
8	3954290	YES	ADD	Gear, Accessory Drive	1	
9	4946485	NO		Compressor, Air	1	
				$Compressor Service Kits		
	4089222	YES	ADD	Kit, Rear Seal & Adpt.	1	Services 4933559
	4089240	YES	ADD	Kit, Gskt & Seals 1 Cyl	1	Gasket & Seal Set Kit 75mm
						Single Major
	4089675	YES	ADD	Plug, Solid	1	Services 4933559
	4089684	YES	ADD	Adapter, Spline	1	Spline Adapter, 11th LH/HM
	4089686	YES	ADD	Kit, Compressor Repair	1	Head Repair Kit, Single 75mm
						US Ports

AIR COMPRESSOR MOUNTING

Electronic Parts Catalog - Option Detail				
Option	Group	Graphic	Film Card	Date
CP9568	12.01	ic910go	T	31-May-05
Engines	ISD4.5 CM2150, B5.9 LPG Plus CM556, G5.9, ISB 5.9 G CM2180, B4.5s, ISF3.8 CM2220 AN, ISB6.7 CM2250, B4.5 RGT, ISB CM800, QSB5.9-44 CM550, B5.9 G, G3.9, ISBe4 CM850, ISD6.7 CM2150, ISD6.7 CM2150 SN, QSB6.7 CM2250, QSB3.9-30 CM550, QSB5.9-30 CM550, B Gas Plus CM556, B6.7s, ISB CM2150, ISD4.5 CM2150 SN, ISB CM850, B LPG Plus CM556, B4.5, B3.9, ISF2.8 CM2220 AN, ISB6.7 CM2150 SN, QSB6.7 CM850, ISBe4 CM2150, G5.9 CM558, ISB6.7 CM2150 SQ, ISB4.5 CM2150 SN, ISB CM550, QSB5.9 CM850, B Gas International CM556, QSB4.5-30 CM550, ISBe CM800, ISBe5 CM2150 SN, QSB4.5 CM850, B5.9, ISBe CM850			

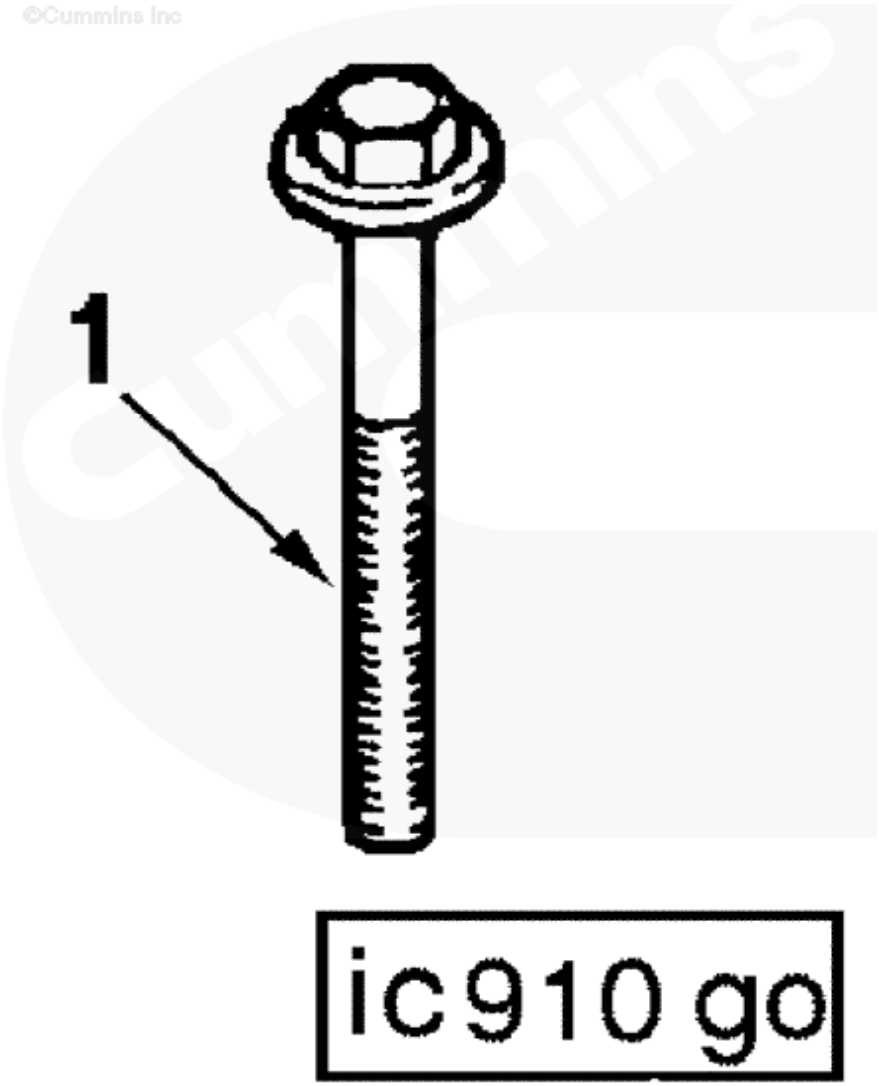

Ref No	Part Number	For-Sale	Shopping Cart	Part Name	Required	Remarks
	CP9568	NO		Air Compressor Mounting		Air Compressor Mounting
						CPR Manufacturer/model:
						Wabco 250cc mounting for
						compressor bracket when fuel
						filter is located on-engine.
1	3901249	YES	ADD	Screw, Hexagon Flange Head Cap	1	M12 X 1.75 X 25

AIR INTAKE CONNECTION

Electronic Parts Catalog - Option Detail				
Option	Group	Graphic	Film Card	Date
IC9454	10.01.2	ic956gb	T	26-Aug-05
Engines	ISD4.5 CM2150, B5.9 LPG Plus CM556, G5.9, ISB 5.9 G CM2180, B4.5s, ISF3.8 CM2220 AN, ISB6.7 CM2250, B4.5 RGT, ISB CM800, QSB5.9-44 CM550, B5.9 G, G3.9, ISBe4 CM850, ISD6.7 CM2150, ISD6.7 CM2150 SN, QSB6.7 CM2250, QSB3.9-30 CM550, QSB5.9-30 CM550, B Gas Plus CM556, B6.7s, ISB CM2150, ISD4.5 CM2150 SN, ISB CM850, B LPG Plus CM556, B4.5, B3.9, ISF2.8 CM2220 AN, ISB6.7 CM2150 SN, QSB6.7 CM850, ISBe4 CM2150, G5.9 CM558, ISB6.7 CM2150 SQ, ISB4.5 CM2150 SN, ISB CM550, QSB5.9 CM850, B Gas International CM556, QSB4.5-30 CM550, ISBe CM800, ISBe5 CM2150 SN, QSB4.5 CM850, B5.9, ISBe CM850			

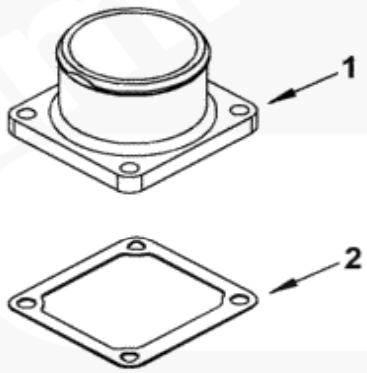

ic956gb

Ref No	Part Number	For-Sale	Shopping Cart	Part Name	Required	Remarks
	IC9454	NO		Air Intake Connection		Air Intake Connection
						Connection Orientation:
						Vertical
						Connection Inlet OD (mm):
						76.0
						Connection Type: Beaded
						Bead/Flange Dia (mm): 79
						OEM Connection Location: X
						from engine CL (mm): 210.5
						Y from CCL (mm): 536.2
						Z from FFOB (mm): -172
						Intake Manifold Mounting
						Provision: 4 holes in 75 x
						80mm pattern.
1	3287255	YES	ADD	Connection, Air Intake	1	
2	3969988	YES	ADD	Gasket, Connection	1	

AIR INTAKE CONNECTION MTG

Electronic Parts Catalog - Option Detail				
Option	Group	Graphic	Film Card	Date
IC9488-01	10.01.2	ic955gd	T	10-Mar-08
Engines	ISD4.5 CM2150, B5.9 LPG Plus CM556, G5.9, ISB 5.9 G CM2180, B4.5s, ISF3.8 CM2220 AN, ISB6.7 CM2250, B4.5 RGT, ISB CM800, QSB5.9-44 CM550, B5.9 G, G3.9, ISBe4 CM850, ISD6.7 CM2150, ISD6.7 CM2150 SN, QSB6.7 CM2250, QSB3.9-30 CM550, QSB5.9-30 CM550, B Gas Plus CM556, B6.7s, ISB CM2150, ISD4.5 CM2150 SN, ISB CM850, B LPG Plus CM556, B4.5, B3.9, ISF2.8 CM2220 AN, ISB6.7 CM2150 SN, QSB6.7 CM850, ISBe4 CM2150, G5.9 CM558, ISB6.7 CM2150 SQ, ISB4.5 CM2150 SN, ISB CM550, QSB5.9 CM850, B Gas International CM556, QSB4.5-30 CM550, ISBe CM800, ISBe5 CM2150 SN, QSB4.5 CM850, B5.9, ISBe CM850			

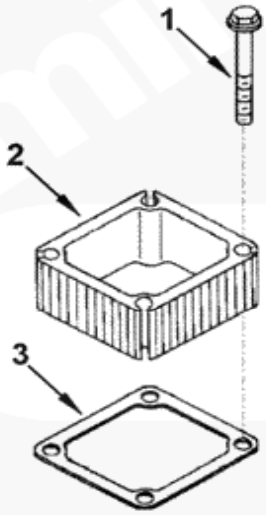

ic955gd

Ref No	Part Number	For-Sale	Shopping Cart	Part Name	Required	Remarks
	IC9488-01	NO		Air Intake Connection		Air Intake Connection
						mounting
						Engine Family: "B" Series
						Intake Connection Flange
						Thickness (mm): 11 air
						heater specified: No air
						heater/spacer thickness (mm):
						41.5.
1	4992852	YES	ADD	Screw, Hexagon Flange Head Cap	4	
2	3922484	YES	ADD	Connection, Spacer	1	
3	3969988	YES	ADD	Gasket, Connection	1	

AIR INTAKE MANIFOLD

Electronic Parts Catalog - Option Detail				
Option	Group	Graphic	Film Card	Date
IM9061-06	10.01	im901gx	T	23-Oct-06
Engines	ISD4.5 CM2150, B5.9 LPG Plus CM556, G5.9, ISB 5.9 G CM2180, B4.5s, ISF3.8 CM2220 AN, ISB6.7 CM2250, B4.5 RGT, ISB CM800, QSB5.9-44 CM550, B5.9 G, G3.9, ISBe4 CM850, ISD6.7 CM2150, ISD6.7 CM2150 SN, QSB6.7 CM2250, QSB3.9-30 CM550, QSB5.9-30 CM550, B Gas Plus CM556, B6.7s, ISB CM2150, ISD4.5 CM2150 SN, ISB CM850, B LPG Plus CM556, B4.5, B3.9, ISF2.8 CM2220 AN, ISB6.7 CM2150 SN, QSB6.7 CM850, ISBe4 CM2150, G5.9 CM558, ISB6.7 CM2150 SQ, ISB4.5 CM2150 SN, ISB CM550, QSB5.9 CM850, B Gas International CM556, QSB4.5-30 CM550, ISBe CM800, ISBe5 CM2150 SN, QSB4.5 CM850, B5.9, ISBe CM850			

©Cummins Inc

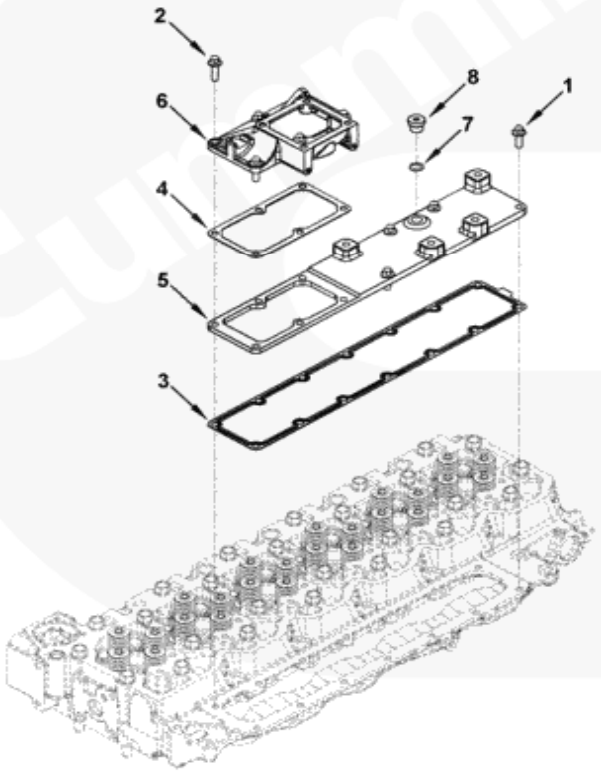

im901gx

Ref No	Part Number	For-Sale	Shopping Cart	Part Name	Required	Remarks
	IM9061-06	NO		MANIFOLD,AIR INTAKE		Mr - air intake cover
						manifold mounting hole
						pattern: 14 holes in 75 x480
						(mm) pattern
						Integral Intake Connection:
						No
						Intake Connection Mounting
						Provision: 4 holes in 75 x80

						(mm) pattern
						Intake connection mounting
						interface
						Location: X from engine
						centerline (mm): 210.5 y
						from crank centerline (mm):
						436.6 z from front face of
						block (mm): -172 air heater
						mounting provision: 4 holes
						in 75 x80 (mm) pattern
						Integral Air Heater: No air
						compressor air supply port
						size: 3/4-14 NPTF air
						compressor air supply port
						location: X from engine
						centerline (mm): 235.6 y
						from crank centerline (mm):
						398.8 z from front face of
						block (mm): -172.
1	3918109	YES	ADD	Screw, Hexagon Flange Head Cap	4	M8 X 1.25 X 25
2	3938036	YES	ADD	Screw, Hexagon Flange Head Cap	6	
3	3947530	YES	ADD	Gasket, Int Manifold Cover	1	
4	3971163	YES	ADD	Gasket, Connection	1	
5	3864483	YES	ADD	Cover, Intake Manifold	1	
6	3999630	YES	ADD	Connection, Adapter	1	
	3678921	YES	ADD	Plug, Threaded	1	M14 X 1.50
7	3678912	YES	ADD	Seal, O Ring	1	
8	3678922	NO		Plug, Threaded	1	M14 X 1.50

ALTERNATOR MOUNTING

Electronic Parts Catalog - Option Detail				
Option	Group	Graphic	Film Card	Date
EH9469-02	13.02.3	eh954zs	T	29-Mar-06
Engines	ISD4.5 CM2150, B5.9 LPG Plus CM556, G5.9, ISB 5.9 G CM2180, B4.5s, ISF3.8 CM2220 AN, ISB6.7 CM2250, B4.5 RGT, ISB CM800, QSB5.9-44 CM550, B5.9 G, G3.9, ISBe4 CM850, ISD6.7 CM2150, ISD6.7 CM2150 SN, QSB6.7 CM2250, QSB3.9-30 CM550, QSB5.9-30 CM550, B Gas Plus CM556, B6.7s, ISB CM2150, ISD4.5 CM2150 SN, ISB CM850, B LPG Plus CM556, B4.5, B3.9, ISF2.8 CM2220 AN, ISB6.7 CM2150 SN, QSB6.7 CM850, ISBe4 CM2150, G5.9 CM558, ISB6.7 CM2150 SQ, ISB4.5 CM2150 SN, ISB CM550, QSB5.9 CM850, B Gas International CM556, QSB4.5-30 CM550, ISBe CM800, ISBe5 CM2150 SN, QSB4.5 CM850, B5.9, ISBe CM850			

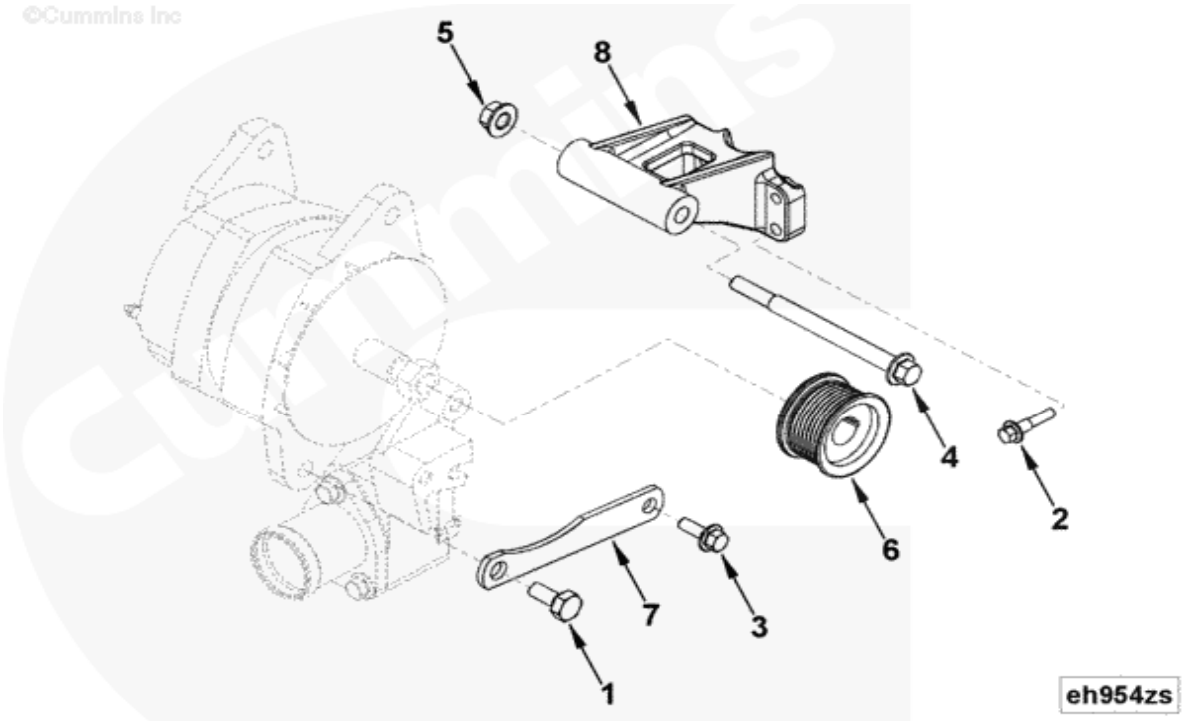

Ref No	Part Number	For-Sale	Shopping Cart	Part Name	Required	Remarks
	EH9469-02	NO		Alternator Mounting		Alternator Mounting
						Engine Family: "B" Series
						alternator mount location:
						Cylinder head alternator
						center:
						Pulley location horizontal
						from engine centerline (mm):
						-287.99
						Pulley location vertical from
						crank centerline (mm):
						339.15
						Pulley Retainer Provided: No
						alternator pulley provided:
						Yes alternator pulley
						diameter over 2.5mm gage
						balls (mm): 61.13 mounting
						for alternator type: 4in.
						spool
						Alternator Driven By Auxilary
						Belt: No alternator tail
						support required: No

						Maximum Amperage At 14volt:
						160
						Maximum Amperage At 28volt:
						80
						Damper Pulley Effective
						Diameter (mm): 173.76
						Unique Characteristics:
						Alternator mounting screws
						provided tensioner locating
						pin position 1: X = -227.0,
						y = 195.0 accommodates
						alternator model: Delco 22si
						24si.
1	3052061	YES	ADD	Screw, Hexagon Head Cap	1	1/2 - 13 X 1 in
2	3900632	YES	ADD	Screw, Hexagon Flange Head Cap	4	M8 X 1.25 X 35
3	3902460	YES	ADD	Screw, Hexagon Flange Head Cap	1	M10 X 1.50 X 25
4	3903105	YES	ADD	Screw, Hexagon Flange Head Cap	1	M12 X 1.75 X 150
5	3903210	YES	ADD	Nut, Hexagon Flange	1	M12 X 1.75
6	3925852	YES	ADD	Pulley, Alternator	1	
7	3942821	YES	ADD	Brace, Alternator	1	
8	4931017	YES	ADD	Support, Alternator	1	

APPROVAL,AGENCY

Electronic Parts Catalog - Option Detail				
Option	Group	Graphic	Film Card	Date
AP9510-03	01.06.1	ap950gw	T	6-Aug-08
Engines	ISD4.5 CM2150, B5.9 LPG Plus CM556, G5.9, ISB 5.9 G CM2180, B4.5s, ISF3.8 CM2220 AN, ISB6.7 CM2250, B4.5 RGT, ISB CM800, QSB5.9-44 CM550, B5.9 G, G3.9, ISBe4 CM850, ISD6.7 CM2150, ISD6.7 CM2150 SN, QSB6.7 CM2250, QSB3.9-30 CM550, QSB5.9-30 CM550, B Gas Plus CM556, B6.7s, ISB CM2150, ISD4.5 CM2150 SN, ISB CM850, B LPG Plus CM556, B4.5, B3.9, ISF2.8 CM2220 AN, ISB6.7 CM2150 SN, QSB6.7 CM850, ISBe4 CM2150, G5.9 CM558, ISB6.7 CM2150 SQ, ISB4.5 CM2150 SN, ISB CM550, QSB5.9 CM850, B Gas International CM556, QSB4.5-30 CM550, ISBe CM800, ISBe5 CM2150 SN, QSB4.5 CM850, B5.9, ISBe CM850			

©Cummins Inc

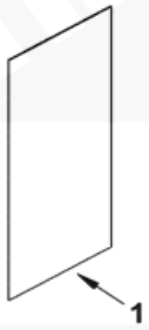

ap950gw

Ref No	Part Number	For-Sale	Shopping Cart	Part Name	Required	Remarks
	AP9510-03	NO		Agency Approval		Agency Approval
						Certified By: EPA,CARB,Eu
						Application: Nonroad cert
						level: Tier 3,tier 3,stiiia
						special allowance: None cert
						agent: EPA,EPA,vca comments:
						Fuel Type: Diesel
						manufacturer of record:
						Cummins language: English
						Structure Code: Mr03
						Engine Family: "B" Series
						variant content: In place of
						3284906 cns may use 4937242
						DEP may use 3284907 or
						4935699
						For engines with fuel pump to
						be mounted/ attached on the
						rear gear housing, dataplate
						to be mounted and centered on
						valve cover
						In the sunken flat section.
1	4989273	YES	ADD	Dataplate	1	

ARRANGEMENT,CPR AIR INLET

Electronic Parts Catalog - Option Detail				
Option	Group	Graphic	Film Card	Date
CI9163	12.01.1	ci953gi	T	23-Feb-09
Engines	ISD4.5 CM2150, B5.9 LPG Plus CM556, G5.9, ISB 5.9 G CM2180, B4.5s, ISF3.8 CM2220 AN, ISB6.7 CM2250, B4.5 RGT, ISB CM800, QSB5.9-44 CM550, B5.9 G, G3.9, ISBe4 CM850, ISD6.7 CM2150, ISD6.7 CM2150 SN, QSB6.7 CM2250, QSB3.9-30 CM550, QSB5.9-30 CM550, B Gas Plus CM556, B6.7s, ISB CM2150, ISD4.5 CM2150 SN, ISB CM850, B LPG Plus CM556, B4.5, B3.9, ISF2.8 CM2220 AN, ISB6.7 CM2150 SN, QSB6.7 CM850, ISBe4 CM2150, G5.9 CM558, ISB6.7 CM2150 SQ, ISB4.5 CM2150 SN, ISB CM550, QSB5.9 CM850, B Gas International CM556, QSB4.5-30 CM550, ISBe CM800, ISBe5 CM2150 SN, QSB4.5 CM850, B5.9, ISBe CM850			

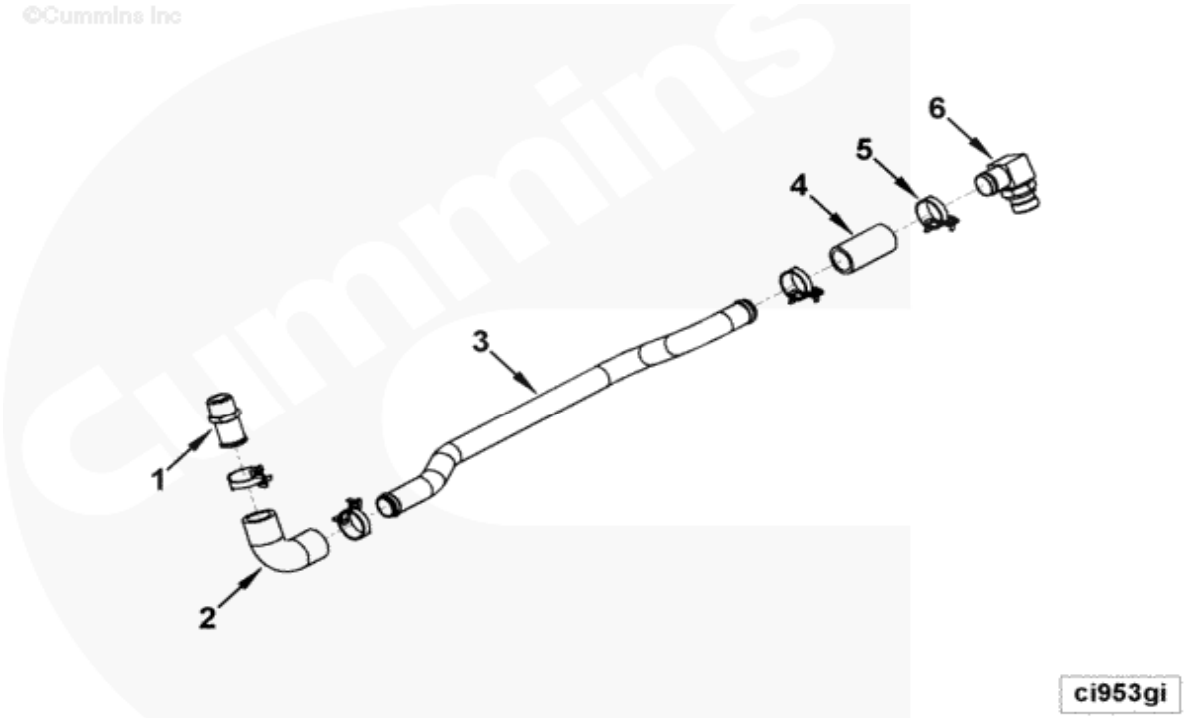

Ref No	Part Number	For-Sale	Shopping Cart	Part Name	Required	Remarks
	CI9163	NO		CPR Air Inlet Arrangement		CPR Air Inlet Arrangement
						Engine family :
						Tier 3 b air plumbing
						supplier: Cummins
						Air Supply Location:
						Plumbing Off Of
						Intake connection air
						plumbing type: Rigid
						CPR Air Inlet Location:
						Top Of CPR Head
						CPR Air Outlet Location:
						Side Of CPR Head compressor
						manufacturing/model: Wabco
						25cc
						Accessory Drive Location:
						High vertical from CCL:
						202.83mm
						horizontal from engine CL:
						190.63mm
						Air CPR position: High
1	215921	YES	ADD	Coupling, Plain Hose	1	3/4 NPTF X 1 in

2	4942580	YES	ADD	Hose, Elbow	1	
3	3976820	YES	ADD	Tube, Compressor Air Inlet	1	
4	3056138	YES	ADD	Hose, Plain	1	
5	3925089	YES	ADD	Clamp, Spring Hose	4	
6	3954452	YES	ADD	Coupling, Elbow Hose	1	

ARRANGEMENT,TURBOCHARGER

Electronic Parts Catalog - Option Detail				
Option	Group	Graphic	Film Card	Date
TB91158-02	10.06.1	tb978gs	T	6-Aug-07
Engines	ISD4.5 CM2150, B5.9 LPG Plus CM556, G5.9, ISB 5.9 G CM2180, B4.5s, ISF3.8 CM2220 AN, ISB6.7 CM2250, B4.5 RGT, ISB CM800, QSB5.9-44 CM550, B5.9 G, G3.9, ISBe4 CM850, ISD6.7 CM2150, ISD6.7 CM2150 SN, QSB6.7 CM2250, QSB3.9-30 CM550, QSB5.9-30 CM550, B Gas Plus CM556, B6.7s, ISB CM2150, ISD4.5 CM2150 SN, ISB CM850, B LPG Plus CM556, B4.5, B3.9, ISF2.8 CM2220 AN, ISB6.7 CM2150 SN, QSB6.7 CM850, ISBe4 CM2150, G5.9 CM558, ISB6.7 CM2150 SQ, ISB4.5 CM2150 SN, ISB CM550, QSB5.9 CM850, B Gas International CM556, QSB4.5-30 CM550, ISBe CM800, ISBe5 CM2150 SN, QSB4.5 CM850, B5.9, ISBe CM850			

©Cummins Inc

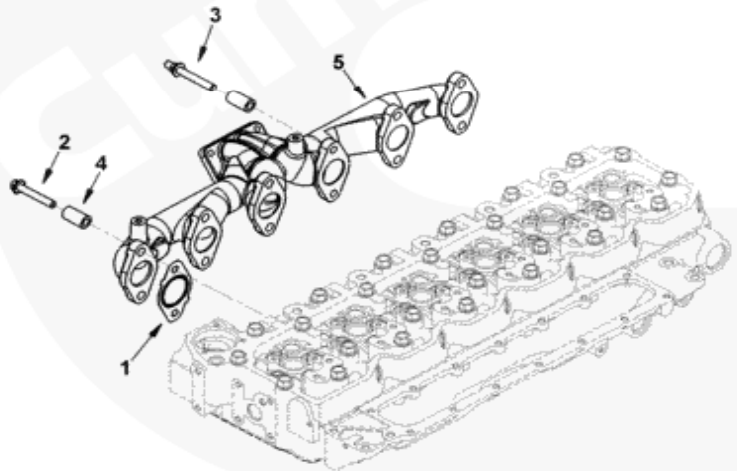

tb978gs

Ref No	Part Number	For-Sale	Shopping Cart	Part Name	Required	Remarks
	TB91158-02	NO		Turbocharger Arrangement		Turbocharger Arrangement
						engine configuration: 6B
						Exhaust Outlet Location:
						LMFO from loc from front face
						of block (mm): 344 from
						crank centerline (mm): 239
						from crank centerline (mm):
						212

						Aspiration: Charge Air
						Cooled
						Turbocharger Type: Wastegate
						Compressor Outlet
						Configuration: Half Marmon
						Compressor Outlet Angle On
						Engine (deg): 150
						Exhaust Outlet Configuration:
						Half Marmon
						Exhaust Manifold Studs: None
						block drain boss: Front
						Exhaust Outlet Diameter (mm):
						78.9.
1	2830444	YES	ADD	Gasket, Exhaust Manifold	6	
2	3944593	YES	ADD	Screw, Hexagon Flange Head Cap	11	M10 X 1.5 X 65
3	3944655	YES	ADD	Screw, Hexagon Flange Head Cap	1	
4	3945252	YES	ADD	Spacer, Mounting	12	
5	3979211	YES	ADD	Manifold, Exhaust	1	

ARRANGEMENT,VALVE COVER

Electronic Parts Catalog - Option Detail				
Option	Group	Graphic	Film Card	Date
VC9305	03.01.1	vc953gv	T	4-Apr-05
Engines	ISD4.5 CM2150, B5.9 LPG Plus CM556, G5.9, ISB 5.9 G CM2180, B4.5s, ISF3.8 CM2220 AN, ISB6.7 CM2250, B4.5 RGT, ISB CM800, QSB5.9-44 CM550, B5.9 G, G3.9, ISBe4 CM850, ISD6.7 CM2150, ISD6.7 CM2150 SN, QSB6.7 CM2250, QSB3.9-30 CM550, QSB5.9-30 CM550, B Gas Plus CM556, B6.7s, ISB CM2150, ISD4.5 CM2150 SN, ISB CM850, B LPG Plus CM556, B4.5, B3.9, ISF2.8 CM2220 AN, ISB6.7 CM2150 SN, QSB6.7 CM850, ISBe4 CM2150, G5.9 CM558, ISB6.7 CM2150 SQ, ISB4.5 CM2150 SN, ISB CM550, QSB5.9 CM850, B Gas International CM556, QSB4.5-30 CM550, ISBe CM800, ISBe5 CM2150 SN, QSB4.5 CM850, B5.9, ISBe CM850			

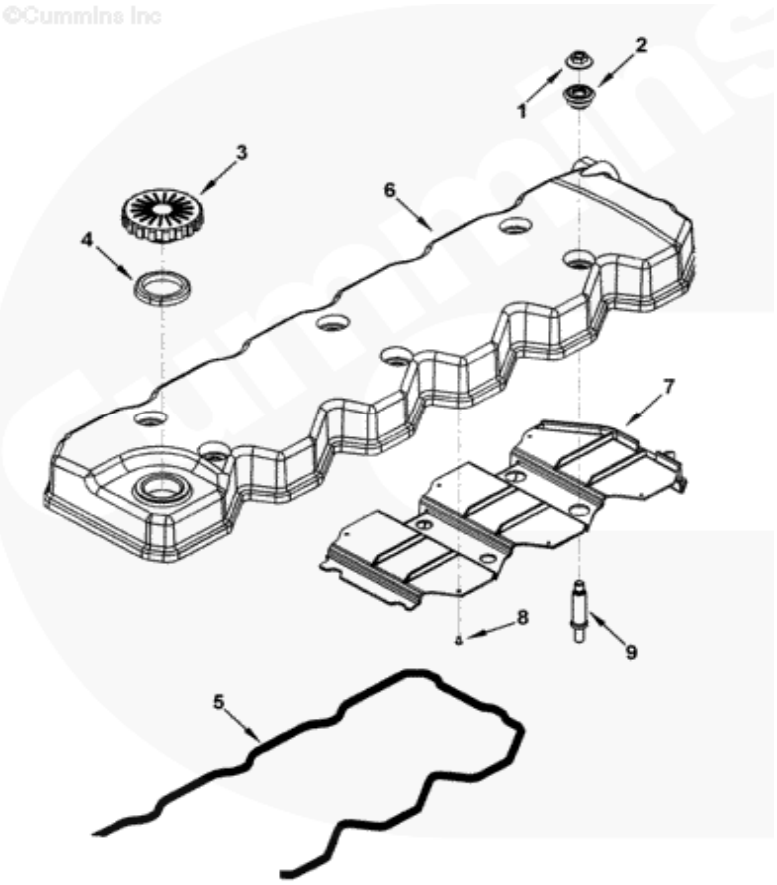

vc953gv

Ref No	Part Number	For-Sale	Shopping Cart	Part Name	Required	Remarks
	VC9305	NO		Valve Cover Arrangement		Valve Cover Arrangement
						compression brake compatible:
						No
						Engine Family: "B" Series
						Design Phase: Tier 3
						Cylinders: 6
						Fill Location: Rear
						Integral Breather: Yes.
1	4893936	YES	ADD	Nut, Hexagon Flange	6	

2	4899239	YES	ADD	Isolator, Noise	6	
	3976171	YES	ADD	Cover, Valve	1	
	4895459	YES	ADD	Cap, Filler	1	
3	4895460	NO		Cap, Filler	1	
4	4895461	YES	ADD	Gasket, Filler Cap	1	
5	4899226	YES	ADD	Gasket, Valve Cover	1	
	3976172	YES	ADD	Cover, Valve	1	
6	3976173	NO		Cover, Valve	1	
7	2830882	NO		Baffle, Breather	1	
8	3931532	YES	ADD	Screw, Self Tapping Metal	8	
9	4896991	YES	ADD	Stud	6	

BELT TENSIONER

Electronic Parts Catalog - Option Detail				
Option	Group	Graphic	Film Card	Date
WP97056-01	13.02.3	wp900zc	T	4-Apr-05
Engines	ISD4.5 CM2150, B5.9 LPG Plus CM556, G5.9, ISB 5.9 G CM2180, B4.5s, ISF3.8 CM2220 AN, ISB6.7 CM2250, B4.5 RGT, ISB CM800, QSB5.9-44 CM550, B5.9 G, G3.9, ISBe4 CM850, ISD6.7 CM2150, ISD6.7 CM2150 SN, QSB6.7 CM2250, QSB3.9-30 CM550, QSB5.9-30 CM550, B Gas Plus CM556, B6.7s, ISB CM2150, ISD4.5 CM2150 SN, ISB CM850, B LPG Plus CM556, B4.5, B3.9, ISF2.8 CM2220 AN, ISB6.7 CM2150 SN, QSB6.7 CM850, ISBe4 CM2150, G5.9 CM558, ISB6.7 CM2150 SQ, ISB4.5 CM2150 SN, ISB CM550, QSB5.9 CM850, B Gas International CM556, QSB4.5-30 CM550, ISBe CM800, ISBe5 CM2150 SN, QSB4.5 CM850, B5.9, ISBe CM850			

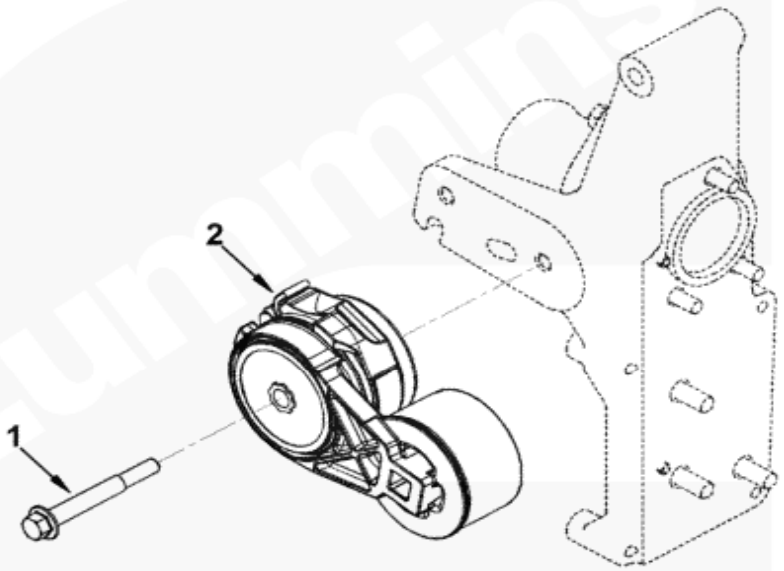

wp900zc

Ref No	Part Number	For-Sale	Shopping Cart	Part Name	Required	Remarks
	WP97056-01	NO		Belt Tensioner		Belt Tensioner
						Tensioner mounting
						location(mm): X: -227.0 y:
						195.0.
1	3900679	YES	ADD	Screw, Hexagon Flange Head Cap	1	M10 X 1.50 X 80
2	3976834	YES	ADD	Tensioner, Belt	1	

BLOCK,CYLINDER

Electronic Parts Catalog - Option Detail				
Option	Group	Graphic	Film Card	Date
BB9206-03	01.01	bb908gg	T	1-Oct-07
Engines	ISD4.5 CM2150, B5.9 LPG Plus CM556, G5.9, ISB 5.9 G CM2180, B4.5s, ISF3.8 CM2220 AN, ISB6.7 CM2250, B4.5 RGT, ISB CM800, QSB5.9-44 CM550, B5.9 G, G3.9, ISBe4 CM850, ISD6.7 CM2150, ISD6.7 CM2150 SN, QSB6.7 CM2250, QSB3.9-30 CM550, QSB5.9-30 CM550, B Gas Plus CM556, B6.7s, ISB CM2150, ISD4.5 CM2150 SN, ISB CM850, B LPG Plus CM556, B4.5, B3.9, ISF2.8 CM2220 AN, ISB6.7 CM2150 SN, QSB6.7 CM850, ISBe4 CM2150, G5.9 CM558, ISB6.7 CM2150 SQ, ISB4.5 CM2150 SN, ISB CM550, QSB5.9 CM850, B Gas International CM556, QSB4.5-30 CM550, ISBe CM800, ISBe5 CM2150 SN, QSB4.5 CM850, B5.9, ISBe CM850			

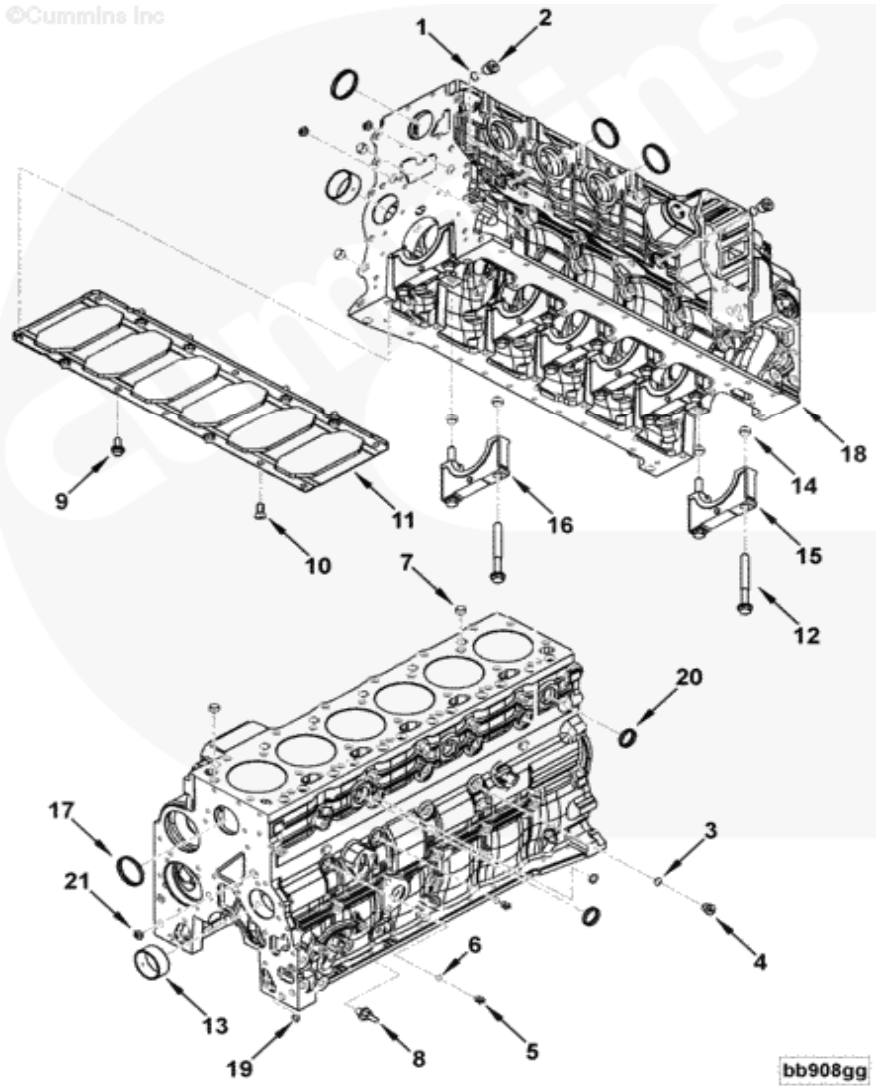

Ref No	Part Number	For-Sale	Shopping Cart	Part Name	Required	Remarks
	BB9206-03	NO		Cylinder Block		Cylinder Block
						Cylinders: 6
						High Speed Balancer: No
						water pump location: Low
						Crank Gear Material: Steel
						Fuel Type: Diesel premium
						block: No tapped fittings:
						Storm structural block: No

						thrust face: 180 degrees
						main bearing type: Standard
						valves per cylinder: 4 rear
						gear train provision: Yes
						front gear train provision:
						No
						Front PTO Provision: Yes
						tappet diameter: 30mm block
						oil pan flange bolt pattern
						spacing: 60mm block oil pan
						flange bolt pattern width:
						299mm block oil pan flange
						bolt pattern quantity: 24
						components included in oil
						pan flange bolt pattern
						block: Yes rear gear
						housing: Yes oil pump: No
						front gear cover: Yes cast
						rear drive provision: No
						Additional Rear Structural
						Member: No.
	3678873	YES	ADD	Plug, Threaded	2	
1	3678786	YES	ADD	Seal, O Ring	1	
2	3678791	NO		Plug, Threaded	1	
	3678921	YES	ADD	Plug, Threaded	1	M14 X 1.50
3	3678912	YES	ADD	Seal, O Ring	1	
4	3678922	NO		Plug, Threaded	1	M14 X 1.50
	3678923	YES	ADD	Plug, Threaded	1	M10 X 1 X 13.5
5	3678924	NO		Plug, Threaded	1	M10 X 1 X 13.5
6	3678925	YES	ADD	Seal, O Ring	1	M10
7	3902343	YES	ADD	Dowel, Ring	2	
8	3936352	YES	ADD	Screw, Hexagon Flange Head Cap	2	
9	3902460	YES	ADD	Screw, Hexagon Flange Head Cap	10	M10 X 1.50 X 25
10	3949830	YES	ADD	Screw, Round Head Cap	1	
11	3965764	YES	ADD	Stiffener, Cylinder Block	1	
	4946586	YES	ADD	Block, Cylinder	1	
12	3927948	YES	ADD	Screw, Hexagon Flange Head Cap	14	
13	3940059	YES	ADD	Bushing	2	
	3974157	YES	ADD	Cap, Main Bearing	6	
14	3900068	YES	ADD	Dowel, Ring	2	
15	3974156	NO		Cap, Main Bearing	1	
	3974159	YES	ADD	Cap, Main Bearing	1	
14	3900068	YES	ADD	Dowel, Ring	2	
16	3974158	NO		Cap, Main Bearing	1	
17	4938189	YES	ADD	Plug, Expansion	4	
18	4946585	NO		Block, Cylinder	1	
19	3900956	YES	ADD	Plug, Expansion	2	
20	3905401	YES	ADD	Plug, Expansion	3	
21	3007635	YES	ADD	Plug, Expansion	3	

CABIN HEATER PLUMBING

Electronic Parts Catalog - Option Detail				
Option	Group	Graphic	Film Card	Date
HC9041-04	08.13.1	hc900gh	T	2-Apr-07
Engines	ISD4.5 CM2150, B5.9 LPG Plus CM556, G5.9, ISB 5.9 G CM2180, B4.5s, ISF3.8 CM2220 AN, ISB6.7 CM2250, B4.5 RGT, ISB CM800, QSB5.9-44 CM550, B5.9 G, G3.9, ISBe4 CM850, ISD6.7 CM2150, ISD6.7 CM2150 SN, QSB6.7 CM2250, QSB3.9-30 CM550, QSB5.9-30 CM550, B Gas Plus CM556, B6.7s, ISB CM2150, ISD4.5 CM2150 SN, ISB CM850, B LPG Plus CM556, B4.5, B3.9, ISF2.8 CM2220 AN, ISB6.7 CM2150 SN, QSB6.7 CM850, ISBe4 CM2150, G5.9 CM558, ISB6.7 CM2150 SQ, ISB4.5 CM2150 SN, ISB CM550, QSB5.9 CM850, B Gas International CM556, QSB4.5-30 CM550, ISBe CM800, ISBe5 CM2150 SN, QSB4.5 CM850, B5.9, ISBe CM850			

©Cummins Inc

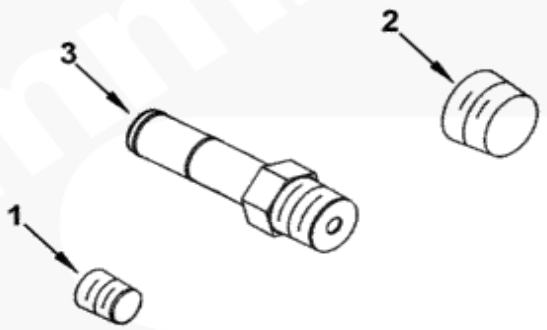

hc900gh

Ref No	Part Number	For-Sale	Shopping Cart	Part Name	Required	Remarks
	HC9041-04	NO		PLUMBING,CABIN HEATER		Mr- cabin heater plumbing
						For use with Cummins supplied
						cab heater customer
						connection location: X: -
						77mm y: +525mm z: -517mm
						customer connection outside
						diameter: 5/8 inch.
1	4931643	YES	ADD	Plug, Pipe	3	1/2 NPT
2	4933532	YES	ADD	Plug, Pipe	1	3/4 NPT
3	3979531	YES	ADD	Coupling, Plain Hose	1	

CAMSHAFT

Electronic Parts Catalog - Option Detail				
Option	Group	Graphic	Film Card	Date
PP40426	01.07	pp968gs	T	15-Sep-10
Engines	ISD4.5 CM2150, B5.9 LPG Plus CM556, G5.9, ISB 5.9 G CM2180, B4.5s, ISF3.8 CM2220 AN, ISB6.7 CM2250, B4.5 RGT, ISB CM800, QSB5.9-44 CM550, B5.9 G, G3.9, ISBe4 CM850, ISD6.7 CM2150, ISD6.7 CM2150 SN, QSB6.7 CM2250, QSB3.9-30 CM550, QSB5.9-30 CM550, B Gas Plus CM556, B6.7s, ISB CM2150, ISD4.5 CM2150 SN, ISB CM850, B LPG Plus CM556, B4.5, B3.9, ISF2.8 CM2220 AN, ISB6.7 CM2150 SN, QSB6.7 CM850, ISBe4 CM2150, G5.9 CM558, ISB6.7 CM2150 SQ, ISB4.5 CM2150 SN, ISB CM550, QSB5.9 CM850, B Gas International CM556, QSB4.5-30 CM550, ISBe CM800, ISBe5 CM2150 SN, QSB4.5 CM850, B5.9, ISBe CM850			

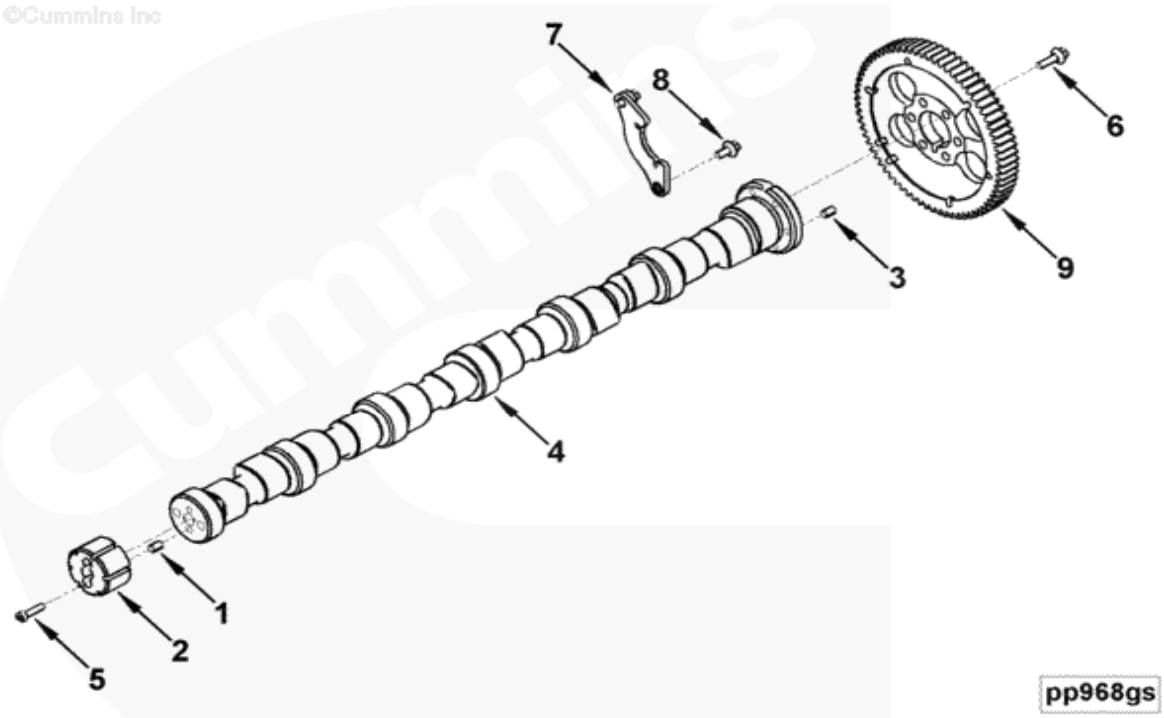

Ref No	Part Number	For-Sale	Shopping Cart	Part Name	Required	Remarks
	PP40426	NO		Camshaft		Camshaft
	3954100	YES	ADD	Camshaft	1	
1	3954111	YES	ADD	Dowel, Ring	1	
2	3955069	YES	ADD	Ring, Speed Indicator	1	
	3979506	YES	ADD	Camshaft	1	
3	3904483	YES	ADD	Dowel, Pin	1	
4	3954099	NO		Camshaft	1	
5	4895877	YES	ADD	Screw, Socket Head Cap	2	
3	3904483	YES	ADD	Dowel, Pin	1	
6	3093730	YES	ADD	Screw, Hexagon Flange Head Cap	6	
7	5258931	YES	ADD	Support, Camshaft Thrust	1	
8	3925883	YES	ADD	Screw, Hexagon Flange Head Cap	2	M8 X 1.25 X 16
9	3955152	YES	ADD	Gear, Camshaft	1	

COMPRESSOR COOLANT PLUMBING

Electronic Parts Catalog - Option Detail				
Option	Group	Graphic	Film Card	Date
CC9232-03	12.01.3	cc951zr	T	15-Aug-05
Engines	ISD4.5 CM2150, B5.9 LPG Plus CM556, G5.9, ISB 5.9 G CM2180, B4.5s, ISF3.8 CM2220 AN, ISB6.7 CM2250, B4.5 RGT, ISB CM800, QSB5.9-44 CM550, B5.9 G, G3.9, ISBe4 CM850, ISD6.7 CM2150, ISD6.7 CM2150 SN, QSB6.7 CM2250, QSB3.9-30 CM550, QSB5.9-30 CM550, B Gas Plus CM556, B6.7s, ISB CM2150, ISD4.5 CM2150 SN, ISB CM850, B LPG Plus CM556, B4.5, B3.9, ISF2.8 CM2220 AN, ISB6.7 CM2150 SN, QSB6.7 CM850, ISBe4 CM2150, G5.9 CM558, ISB6.7 CM2150 SQ, ISB4.5 CM2150 SN, ISB CM550, QSB5.9 CM850, B Gas International CM556, QSB4.5-30 CM550, ISBe CM800, ISBe5 CM2150 SN, QSB4.5 CM850, B5.9, ISBe CM850			

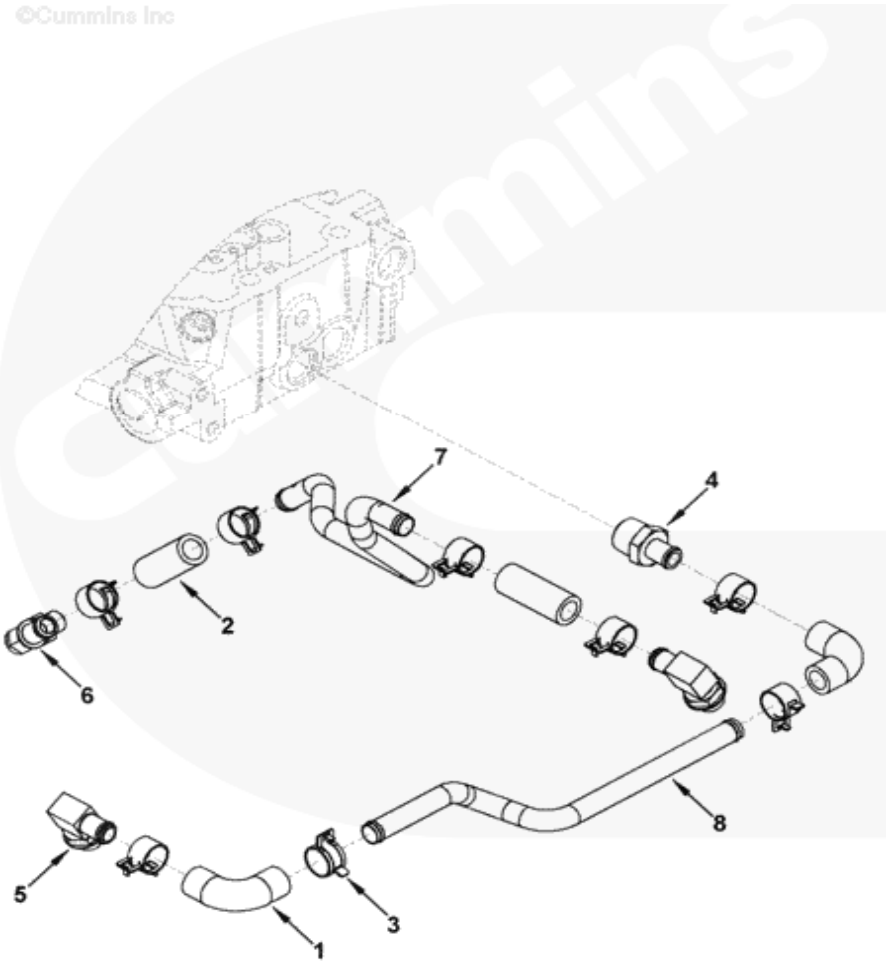

Ref No	Part Number	For-Sale	Shopping Cart	Part Name	Required	Remarks
	CC9232-03	NO		Compressor Coolant Plumbin		Compressor Coolant Plumbing
						Engine Family: "B" Series
						Coolant Pick-Up Location:
						Cylinder Block Side (remove
						expansion plugs) coolant
						return: Head rear water
						plumbing type: Rigid
						CPR Water Inlet Location:

						Top
						CPR Water Outlet Location:
						Top
						CPR Air Outlet Location:
						Side compressor
						manufacturing/model: Wabco
						250cc
						Accessory Drive Location:
						Vertical from crank
						CL: 202.83mm
						horizontal from engine
						CL: 190.63mm air
						compressor position: High
1	4930889	YES	ADD	Hose, Elbow	3	
2	3931522	YES	ADD	Hose, Plain	2	
3	4930304	YES	ADD	Clamp, Hose	8	23 mm Clamp
4	3954646	YES	ADD	Coupling, Plain Hose	1	
5	3979410	YES	ADD	Coupling, Elbow Hose	2	
6	3954655	YES	ADD	Coupling, Elbow Hose	1	
7	3955465	YES	ADD	Tube, Cpr Water Inlet	1	
8	3955466	YES	ADD	Tube, Cpr Water Outlet	1	

CONNECTING ROD AND PISTON

Electronic Parts Catalog - Option Detail				
Option	Group	Graphic	Film Card	Date
PP40426-01	01.04	pp970gm	T	16-Mar-07
Engines	ISD4.5 CM2150, B5.9 LPG Plus CM556, G5.9, ISB 5.9 G CM2180, B4.5s, ISF3.8 CM2220 AN, ISB6.7 CM2250, B4.5 RGT, ISB CM800, QSB5.9-44 CM550, B5.9 G, G3.9, ISBe4 CM850, ISD6.7 CM2150, ISD6.7 CM2150 SN, QSB6.7 CM2250, QSB3.9-30 CM550, QSB5.9-30 CM550, B Gas Plus CM556, B6.7s, ISB CM2150, ISD4.5 CM2150 SN, ISB CM850, B LPG Plus CM556, B4.5, B3.9, ISF2.8 CM2220 AN, ISB6.7 CM2150 SN, QSB6.7 CM850, ISBe4 CM2150, G5.9 CM558, ISB6.7 CM2150 SQ, ISB4.5 CM2150 SN, ISB CM550, QSB5.9 CM850, B Gas International CM556, QSB4.5-30 CM550, ISBe CM800, ISBe5 CM2150 SN, QSB4.5 CM850, B5.9, ISBe CM850			

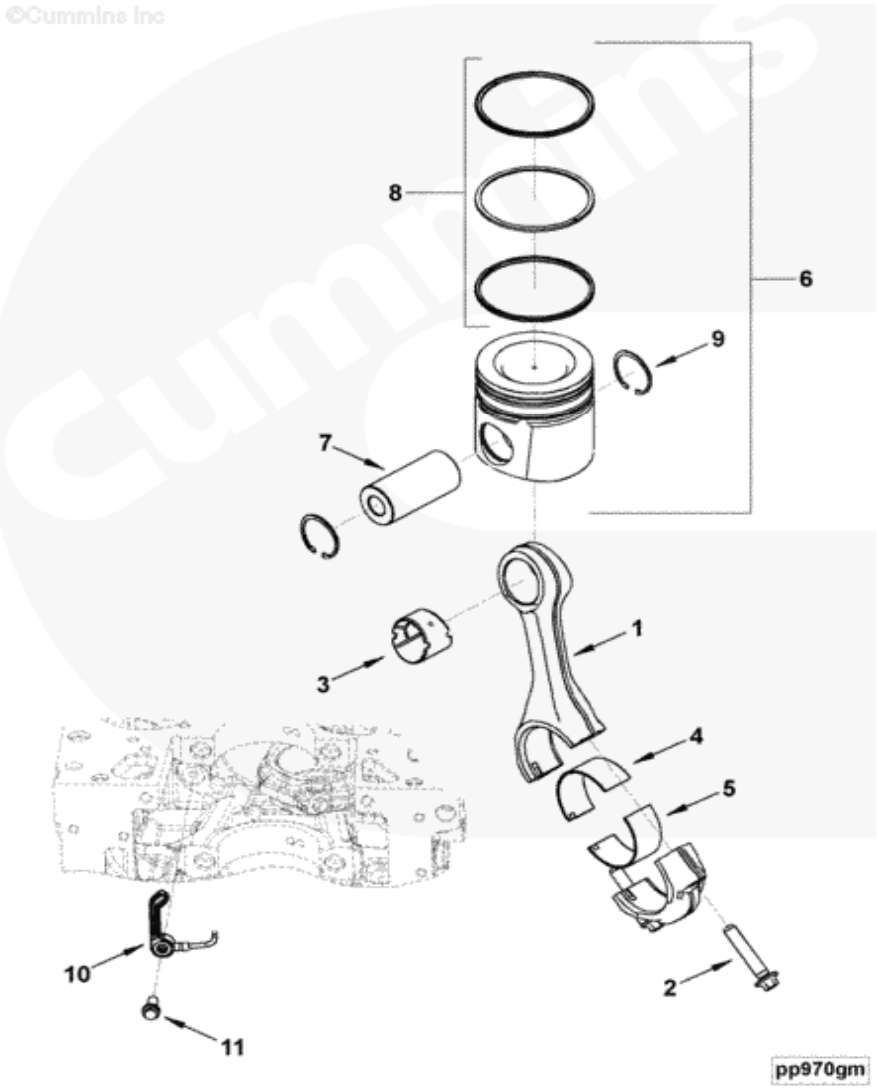

Ref No	Part Number	For-Sale	Shopping Cart	Part Name	Required	Remarks
	PP40426-01	NO		Connecting Rod and Piston		Connecting Rod and Piston
						technical model name: 6
						btaae
						Engine Family: "B" Series
						CPL: 0426
						Certified By: EPA ,CARB,Eu
						not used:
						Cylinders: 0006 not used:

						Engine Aspiration: Charge
						Air Cooled
						Engine Control System: E2 I
						engine application: Nonroad
						comment: Engine design
						phase: Tier 3 b service
						model name: ECM version:
						CM850 centinel provision:
						N/A cylinder head swirl: 1.5
						manifold pressure to lift
						exhaust valve (PSI): 60
						applicable FR options:
						FR91433, FR91446, FR91426,
						FR91436, FR91645 con rod
						4891176 may be used in place
						of 3971212.
	3971212	NO		Rod, Engine Connecting	6	Recon Equivalent 3971212 RX
1	3971211	YES	ADD	Rod, Engine Connecting	1	
2	4891179	YES	ADD	Screw, Connecting Rod Cap	2	
3	4891178	YES	ADD	Bushing	1	
4	3969562	YES	ADD	Bearing, Connecting Rod	6	Standard
5	4893693	YES	ADD	Bearing, Connecting Rod	6	Standard
6	4955160	YES	ADD	Kit, Engine Piston	6	
	4934860	NO		Piston, Engine	1	Serviced as 4955160
7	4931041	YES	ADD	Pin, Piston	1	
8	4955251	YES	ADD	Set, Piston Ring	1	
	3976339	NO		Ring, Compression Piston	1	
	4932587	NO		Ring, Compression Piston	1	
	4932801	YES	ADD	Ring, Oil Piston	1	
9	3920691	YES	ADD	Ring, Retaining	12	
10	4937308	YES	ADD	Nozzle, Piston Cooling	6	
11	3964817	YES	ADD	Screw, Banjo Connector	6	
6	4955481	YES	ADD	Kit, Engine Piston .50 mm	A/R	0.50 mm Oversize
	4934816	NO		Piston, Engine	1	Serviced as 4955481
8	4955480	YES	ADD	Set, Piston Ring .50 mm	1	0.50 mm Oversize
4	3901171	YES	ADD	Bearing, Connecting Rod	A/R	0.25 mm Oversize
4	3901172	YES	ADD	Bearing, Connecting Rod	A/R	0.50 mm Oversize
4	3901173	YES	ADD	Bearing, Connecting Rod	A/R	0.75 mm Oversize
4	3901174	YES	ADD	Bearing, Connecting Rod	A/R	1.00 mm Oversize
5	4892795	YES	ADD	Bearing, Connecting Rod	A/R	0.25 mm Oversize
5	4892796	YES	ADD	Bearing, Connecting Rod	A/R	0.50 mm Oversize
5	4892797	YES	ADD	Bearing, Connecting Rod	A/R	0.75 mm Oversize
5	4892798	YES	ADD	Bearing, Connecting Rod	A/R	1.00 mm Oversize

CONNECTION,EXHAUST OUTLET

Electronic Parts Catalog - Option Detail				
Option	Group	Graphic	Film Card	Date
XS9136-03	11.01.1	xs957gh	T	11-Sep-08
Engines	ISD4.5 CM2150, B5.9 LPG Plus CM556, G5.9, ISB 5.9 G CM2180, B4.5s, ISF3.8 CM2220 AN, ISB6.7 CM2250, B4.5 RGT, ISB CM800, QSB5.9-44 CM550, B5.9 G, G3.9, ISBe4 CM850, ISD6.7 CM2150, ISD6.7 CM2150 SN, QSB6.7 CM2250, QSB3.9-30 CM550, QSB5.9-30 CM550, B Gas Plus CM556, B6.7s, ISB CM2150, ISD4.5 CM2150 SN, ISB CM850, B LPG Plus CM556, B4.5, B3.9, ISF2.8 CM2220 AN, ISB6.7 CM2150 SN, QSB6.7 CM850, ISBe4 CM2150, G5.9 CM558, ISB6.7 CM2150 SQ, ISB4.5 CM2150 SN, ISB CM550, QSB5.9 CM850, B Gas International CM556, QSB4.5-30 CM550, ISBe CM800, ISBe5 CM2150 SN, QSB4.5 CM850, B5.9, ISBe CM850			

©Cummins Inc

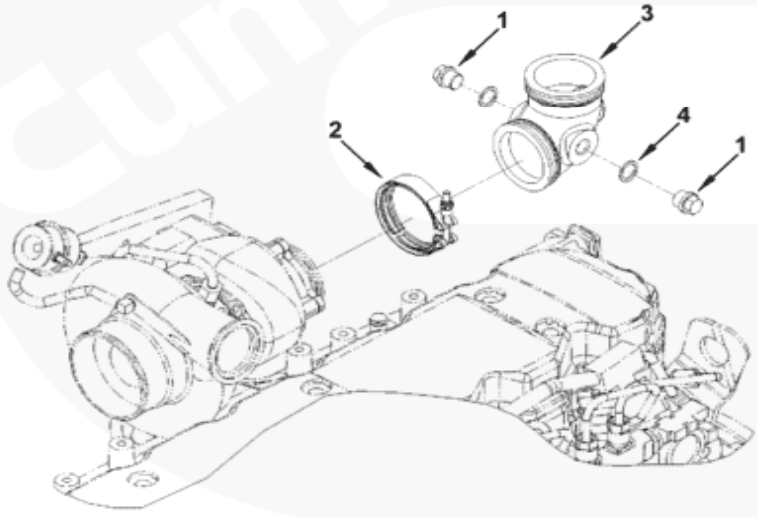

xs957gh

Ref No	Part Number	For-Sale	Shopping Cart	Part Name	Required	Remarks
	XS9136-03	NO		Exhaust Outlet Connection		Connection, exhaust outlet
						Engine Cylinders: 6
						Aspiration: T/A
						Exhaust Pipe Dia: 3.00 in
						Manifold Type: Dry turbine
						outlet flange type: Half
						Marmon
						Location: Any

						Connection Angle: 90 Degrees
						Contains M18 tapped hole
						Half Marmon on both ends
1	3900215	YES	ADD	Plug, Threaded	2	M8 X 1.25 X 12
2	3903652	YES	ADD	Clamp, V Band	1	
3	3937327	YES	ADD	Connection, Exhaust Outlet	1	
4	3920773	YES	ADD	Washer, Sealing	2	18mm

CONNECTION,WATER INLET

Electronic Parts Catalog - Option Detail				
Option	Group	Graphic	Film Card	Date
WI9180-02	08.07.1	wi901zt	T	29-Feb-08
Engines	ISD4.5 CM2150, B5.9 LPG Plus CM556, G5.9, ISB 5.9 G CM2180, B4.5s, ISF3.8 CM2220 AN, ISB6.7 CM2250, B4.5 RGT, ISB CM800, QSB5.9-44 CM550, B5.9 G, G3.9, ISBe4 CM850, ISD6.7 CM2150, ISD6.7 CM2150 SN, QSB6.7 CM2250, QSB3.9-30 CM550, QSB5.9-30 CM550, B Gas Plus CM556, B6.7s, ISB CM2150, ISD4.5 CM2150 SN, ISB CM850, B LPG Plus CM556, B4.5, B3.9, ISF2.8 CM2220 AN, ISB6.7 CM2150 SN, QSB6.7 CM850, ISBe4 CM2150, G5.9 CM558, ISB6.7 CM2150 SQ, ISB4.5 CM2150 SN, ISB CM550, QSB5.9 CM850, B Gas International CM556, QSB4.5-30 CM550, ISBe CM800, ISBe5 CM2150 SN, QSB4.5 CM850, B5.9, ISBe CM850			

©Cummins Inc

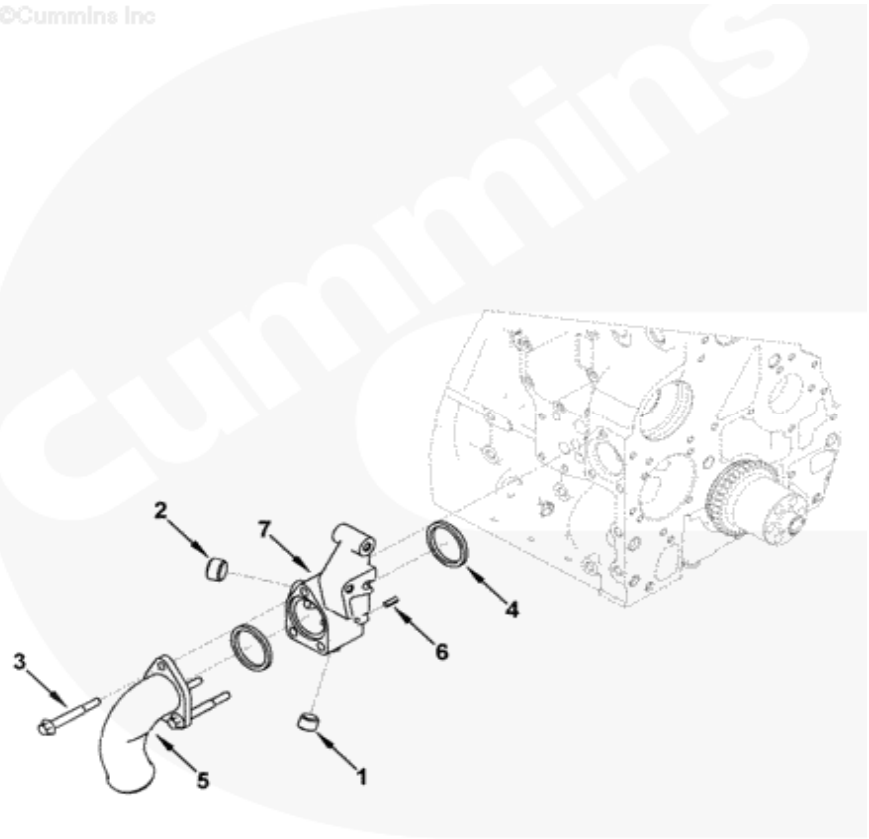

wi901zt

Ref No	Part Number	For-Sale	Shopping Cart	Part Name	Required	Remarks
	WI9180-02	NO		Water Inlet Connection		Water Inlet Connection
						Connection OD (mm): 50.8
						Connection Type: Beaded
						Connection Location: Down,20
						Degrees Inboard from crank
						CL (mm): 16.1 from
						engine CL (mm): -
						293.7 from FFOB

						(mm): -32 mounting for
						belt tensioner: Yes
						Provision For Alternator
						Brace: Yes
						Engine Family: "B" Series
						pipe plug 3008468 may be used
						in place of 4931643
						Pipe plug 3008469 may be used
						in place of 4933532
1	4931643	YES	ADD	Plug, Pipe	1	
2	4933532	YES	ADD	Plug, Pipe	1	
3	3900679	YES	ADD	Screw, Hexagon Flange Head Cap	3	M10 X 1.50 X 80
4	4983908	YES	ADD	Seal, Rectangular Ring	2	
5	3921382	YES	ADD	Connection, Water Inlet	1	
	3943549	YES	ADD	Connection, Water Inlet	1	
6	131584	YES	ADD	Pin, Roll	2	
7	4980267	NO		Connection, Water Inlet	1	

COOLING HEATER STARTING AID

Electronic Parts Catalog - Option Detail				
Option	Group	Graphic	Film Card	Date
CH9070-04	10.02	ch900zm	T	6-Aug-07
Engines	ISD4.5 CM2150, B5.9 LPG Plus CM556, G5.9, ISB 5.9 G CM2180, B4.5s, ISF3.8 CM2220 AN, ISB6.7 CM2250, B4.5 RGT, ISB CM800, QSB5.9-44 CM550, B5.9 G, G3.9, ISBe4 CM850, ISD6.7 CM2150, ISD6.7 CM2150 SN, QSB6.7 CM2250, QSB3.9-30 CM550, QSB5.9-30 CM550, B Gas Plus CM556, B6.7s, ISB CM2150, ISD4.5 CM2150 SN, ISB CM850, B LPG Plus CM556, B4.5, B3.9, ISF2.8 CM2220 AN, ISB6.7 CM2150 SN, QSB6.7 CM850, ISBe4 CM2150, G5.9 CM558, ISB6.7 CM2150 SQ, ISB4.5 CM2150 SN, ISB CM550, QSB5.9 CM850, B Gas International CM556, QSB4.5-30 CM550, ISBe CM800, ISBe5 CM2150 SN, QSB4.5 CM850, B5.9, ISBe CM850			

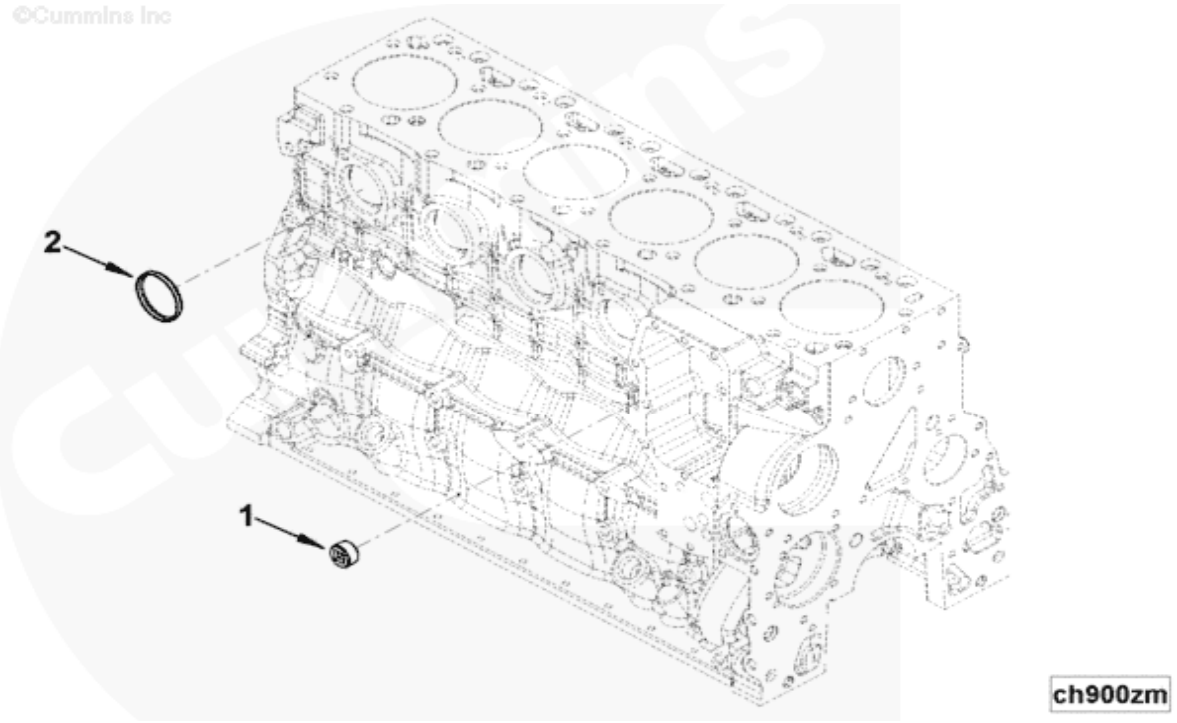

Ref No	Part Number	For-Sale	Shopping Cart	Part Name	Required	Remarks
	CH9070-04	NO		Coolant Heater Starting Ai		Coolant Heater Starting Aid
						when no heater is required.
						Engine Family: "B" Series.
1	4933532	YES	ADD	Plug, Pipe	1	
2	4938189	YES	ADD	Plug, Expansion	1	

COOLER,ENGINE OIL

Electronic Parts Catalog - Option Detail				
Option	Group	Graphic	Film Card	Date
LC9261	07.05	lc901za	T	18-Dec-06
Engines	ISD4.5 CM2150, B5.9 LPG Plus CM556, G5.9, ISB 5.9 G CM2180, B4.5s, ISF3.8 CM2220 AN, ISB6.7 CM2250, B4.5 RGT, ISB CM800, QSB5.9-44 CM550, B5.9 G, G3.9, ISBe4 CM850, ISD6.7 CM2150, ISD6.7 CM2150 SN, QSB6.7 CM2250, QSB3.9-30 CM550, QSB5.9-30 CM550, B Gas Plus CM556, B6.7s, ISB CM2150, ISD4.5 CM2150 SN, ISB CM850, B LPG Plus CM556, B4.5, B3.9, ISF2.8 CM2220 AN, ISB6.7 CM2150 SN, QSB6.7 CM850, ISBe4 CM2150, G5.9 CM558, ISB6.7 CM2150 SQ, ISB4.5 CM2150 SN, ISB CM550, QSB5.9 CM850, B Gas International CM556, QSB4.5-30 CM550, ISBe CM800, ISBe5 CM2150 SN, QSB4.5 CM850, B5.9, ISBe CM850			

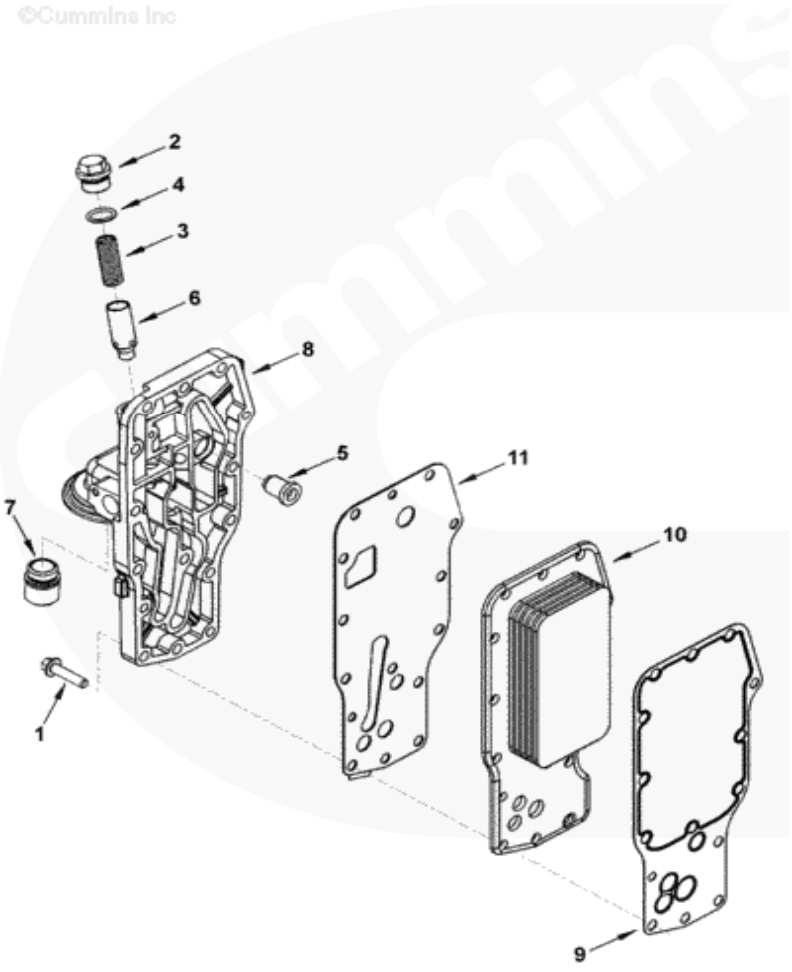

Ref No	Part Number	For-Sale	Shopping Cart	Part Name	Required	Remarks
	LC9261	NO		Engine Oil Cooler		Engine Oil Cooler
						Structure Code: 03 EBM
						Oil Filter Location: On
						Cooler - Vertical
						Requires Chief Engineer
						Approval: No
						Oil Filter Logo: Fleetguard
						filter loc. X from

						CCL (mm): -228
						Filter loc. Y from CCL
						(mm): -11.8 filter loc. Z
						From FFOB: -137
						Maximun BHP: 300
						Engine Families: "B" Series
						Restricted Engine Aspiration:
						Charge air cooled
						turbocharged pressure relief
						set (PSI): 65
						Cylinders: 6
						Unique Characteristics: 8
						Plates no oil pressure sensor
						port.
1	3900632	YES	ADD	Screw, Hexagon Flange Head Cap	15	M8 X 1.25 X 35
	4931572	YES	ADD	Head, Lub Oil Filter	1	
2	3915787	YES	ADD	Plug, Threaded	1	M22 X 1.50
3	3925009	YES	ADD	Spring, Compression	1	
4	3929457	YES	ADD	Seal, O Ring	1	
5	3936365	YES	ADD	Valve, Pressure Relief	1	
6	4896404	YES	ADD	Plunger, Prs Regulator	1	
	4931571	YES	ADD	Head, Lub Oil Filter	1	
7	4893391	NO		Adapter, Filter Head	1	
8	4931570	NO		Head, Lub Oil Filter	1	
9	2830559	YES	ADD	Gasket, Oil Cooler Core	1	Serviced as 3977913
10	3975818	YES	ADD	Cooler, Oil	1	
11	2831077	YES	ADD	Gasket, Filter Head	1	

COOLER,TOR CONVERTER OIL

Electronic Parts Catalog - Option Detail				
Option	Group	Graphic	Film Card	Date
TK9036-01	08.09	tk944gi	T	6-Aug-07
Engines	ISD4.5 CM2150, B5.9 LPG Plus CM556, G5.9, ISB 5.9 G CM2180, B4.5s, ISF3.8 CM2220 AN, ISB6.7 CM2250, B4.5 RGT, ISB CM800, QSB5.9-44 CM550, B5.9 G, G3.9, ISBe4 CM850, ISD6.7 CM2150, ISD6.7 CM2150 SN, QSB6.7 CM2250, QSB3.9-30 CM550, QSB5.9-30 CM550, B Gas Plus CM556, B6.7s, ISB CM2150, ISD4.5 CM2150 SN, ISB CM850, B LPG Plus CM556, B4.5, B3.9, ISF2.8 CM2220 AN, ISB6.7 CM2150 SN, QSB6.7 CM850, ISBe4 CM2150, G5.9 CM558, ISB6.7 CM2150 SQ, ISB4.5 CM2150 SN, ISB CM550, QSB5.9 CM850, B Gas International CM556, QSB4.5-30 CM550, ISBe CM800, ISBe5 CM2150 SN, QSB4.5 CM850, B5.9, ISBe CM850			

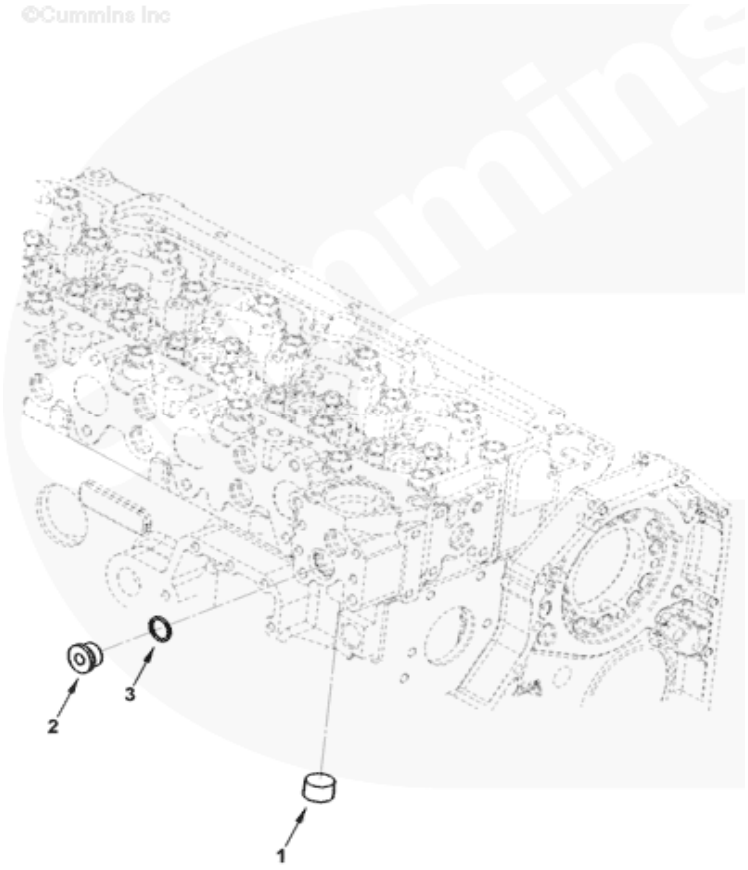

tk944gi

Ref No	Part Number	For-Sale	Shopping Cart	Part Name	Required	Remarks
	TK9036-01	NO		COOLER,TOR CONVERTER OIL		Mr - tor converter oil cooler
						For use when no torque
						converter is required. Pipe
						plug 3008469 may be used in
						place of 4933532.
1	4933532	YES	ADD	Plug, Pipe	1	3/4 NPT
	3089238	YES	ADD	Plug, Threaded	1	M22 X 1.50 X 20.1
2	3089239	NO		Plug, Threaded	1	
3	3089240	YES	ADD	Seal, O Ring	1	M22

COVER,FRONT GEAR

Electronic Parts Catalog - Option Detail				
Option	Group	Graphic	Film Card	Date
GG9835	01.06	gg940gy	T	18-Mar-05
Engines	ISD4.5 CM2150, B5.9 LPG Plus CM556, G5.9, ISB 5.9 G CM2180, B4.5s, ISF3.8 CM2220 AN, ISB6.7 CM2250, B4.5 RGT, ISB CM800, QSB5.9-44 CM550, B5.9 G, G3.9, ISBe4 CM850, ISD6.7 CM2150, ISD6.7 CM2150 SN, QSB6.7 CM2250, QSB3.9-30 CM550, QSB5.9-30 CM550, B Gas Plus CM556, B6.7s, ISB CM2150, ISD4.5 CM2150 SN, ISB CM850, B LPG Plus CM556, B4.5, B3.9, ISF2.8 CM2220 AN, ISB6.7 CM2150 SN, QSB6.7 CM850, ISBe4 CM2150, G5.9 CM558, ISB6.7 CM2150 SQ, ISB4.5 CM2150 SN, ISB CM550, QSB5.9 CM850, B Gas International CM556, QSB4.5-30 CM550, ISBe CM800, ISBe5 CM2150 SN, QSB4.5 CM850, B5.9, ISBe CM850			

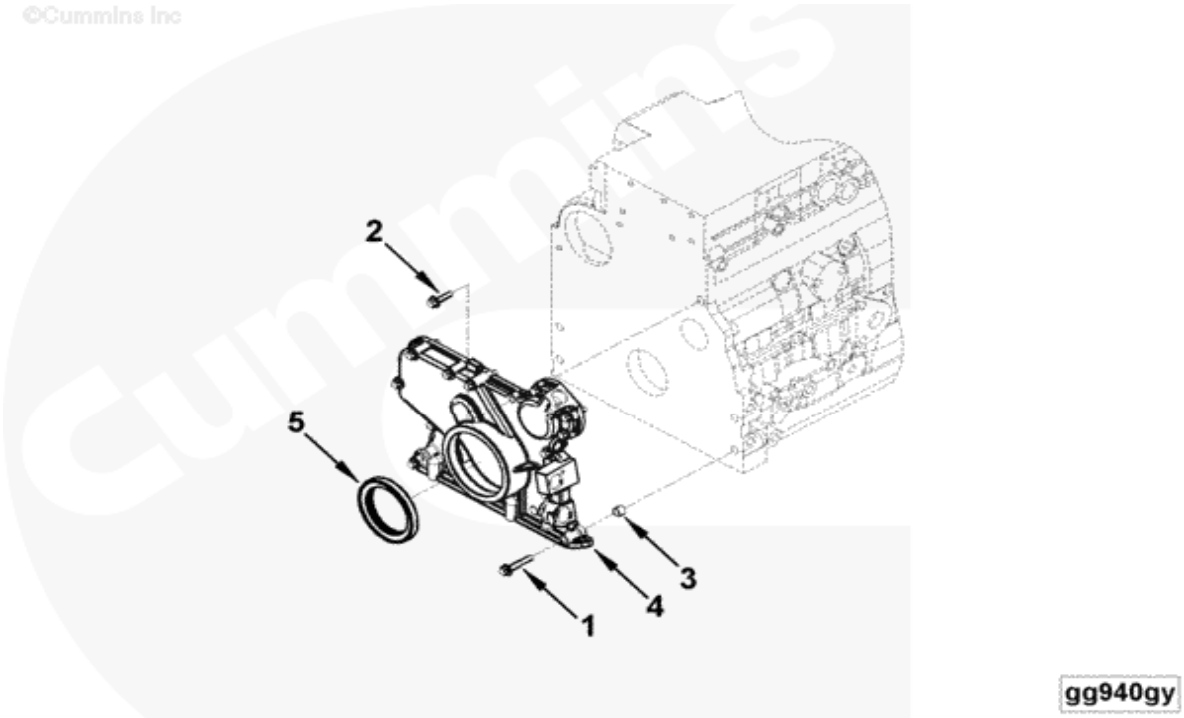

Ref No	Part Number	For-Sale	Shopping Cart	Part Name	Required	Remarks
	GG9835	NO		Front Gear Cover		Front Gear Cover
1	3901445	YES	ADD	Screw, Hexagon Flange Head Cap	7	M8 X 1.25 X 45
2	3902114	YES	ADD	Screw, Hexagon Flange Head Cap	6	M8 X 1.25 X 30
3	3949326	YES	ADD	Dowel, Ring	2	
4	4930846	YES	ADD	Cover, Front	1	
5	4890832	YES	ADD	Seal, Oil	1	

CRANKCASE BREATHER

Electronic Parts Catalog - Option Detail				
Option	Group	Graphic	Film Card	Date
BR9191-02	03.02	br953go	T	30-Jan-06
Engines	ISD4.5 CM2150, B5.9 LPG Plus CM556, G5.9, ISB 5.9 G CM2180, B4.5s, ISF3.8 CM2220 AN, ISB6.7 CM2250, B4.5 RGT, ISB CM800, QSB5.9-44 CM550, B5.9 G, G3.9, ISBe4 CM850, ISD6.7 CM2150, ISD6.7 CM2150 SN, QSB6.7 CM2250, QSB3.9-30 CM550, QSB5.9-30 CM550, B Gas Plus CM556, B6.7s, ISB CM2150, ISD4.5 CM2150 SN, ISB CM850, B LPG Plus CM556, B4.5, B3.9, ISF2.8 CM2220 AN, ISB6.7 CM2150 SN, QSB6.7 CM850, ISBe4 CM2150, G5.9 CM558, ISB6.7 CM2150 SQ, ISB4.5 CM2150 SN, ISB CM550, QSB5.9 CM850, B Gas International CM556, QSB4.5-30 CM550, ISBe CM800, ISBe5 CM2150 SN, QSB4.5 CM850, B5.9, ISBe CM850			

©Cummins Inc

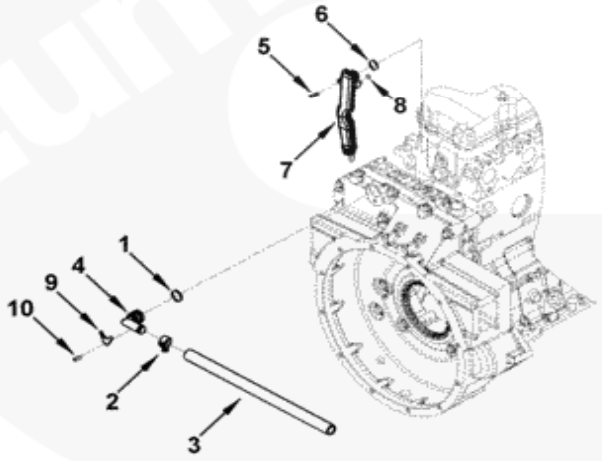

br953go

Ref No	Part Number	For-Sale	Shopping Cart	Part Name	Required	Remarks
	BR9191-02	NO		Crankcase Breather		Crankcase Breather
						Structure Code: Mr03 EBM
						System Type: Non ccv
						Location:
						Flywheel Housing Vent Size:
						19.05 Outlet can be Rotated
						to Suit OEM Around Horizontal
						Axis Factory set at 8 o'

						Clock to Following:
						Vent Location From Centerline
						Of Crank (mm): 256
						Vent Location From C/L
						of Engine (mm): 180.7
						Hose Length Below Pan Rail:
						N/A Engine Angularity Limit:
						32 Deg.
1	145530	YES	ADD	Seal, O Ring	1	
2	3917995	YES	ADD	Clamp, Spring Hose	1	
3	3918614	YES	ADD	Hose, Plain	1	
4	3966164	YES	ADD	Breather, Crankcase	1	
5	3977572	YES	ADD	Screw, Round Head Cap	2	
	3971371	YES	ADD	Tube, Breather	1	
6	145528	YES	ADD	Seal, O Ring	2	
7	3968786	NO		Tube, Breather	1	
8	3970042	YES	ADD	Seal, O Ring	1	
9	4899498	YES	ADD	Plate, Clamping	1	
10	4937420	YES	ADD	Screw, Round Head Cap	1	

CRANKSHAFT AND BEARINGS

Electronic Parts Catalog - Option Detail				
Option	Group	Graphic	Film Card	Date
BB9206	01.02	bb904ge	T	7-Nov-05
Engines	ISD4.5 CM2150, B5.9 LPG Plus CM556, G5.9, ISB 5.9 G CM2180, B4.5s, ISF3.8 CM2220 AN, ISB6.7 CM2250, B4.5 RGT, ISB CM800, QSB5.9-44 CM550, B5.9 G, G3.9, ISBe4 CM850, ISD6.7 CM2150, ISD6.7 CM2150 SN, QSB6.7 CM2250, QSB3.9-30 CM550, QSB5.9-30 CM550, B Gas Plus CM556, B6.7s, ISB CM2150, ISD4.5 CM2150 SN, ISB CM850, B LPG Plus CM556, B4.5, B3.9, ISF2.8 CM2220 AN, ISB6.7 CM2150 SN, QSB6.7 CM850, ISBe4 CM2150, G5.9 CM558, ISB6.7 CM2150 SQ, ISB4.5 CM2150 SN, ISB CM550, QSB5.9 CM850, B Gas International CM556, QSB4.5-30 CM550, ISBe CM800, ISBe5 CM2150 SN, QSB4.5 CM850, B5.9, ISBe CM850			

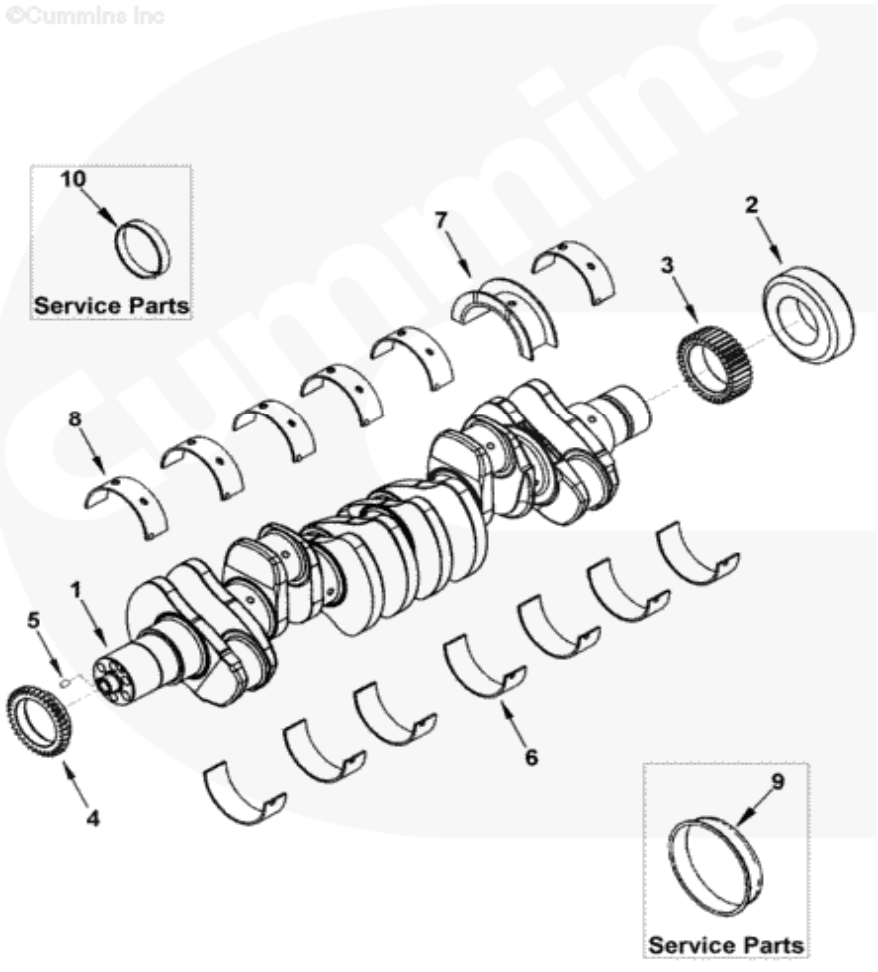

bb904ge

Ref No	Part Number	For-Sale	Shopping Cart	Part Name	Required	Remarks
	BB9206	NO		Crankshaft and Bearings		Crankshaft and Bearings
	3974635	YES	ADD	Crankshaft, Engine	1	
	3974538	YES	ADD	Crankshaft, Engine	1	
1	3968164	NO		Crankshaft, Engine	1	
2	2831066	NO		Collar, Shaft	1	
3	3955150	YES	ADD	Gear, Crankshaft	1	
4	3955151	YES	ADD	Gear, Crankshaft	1	

5	3904483	YES	ADD	Dowel, Pin	1	
	3357480	YES	ADD	PDC Kit	A/R	Standard
6	3929021	YES	ADD	Bearing, Main	7	Standard
7	3927772	YES	ADD	Bearing, Crankshaft Thrust	1	Standard
8	3929016	YES	ADD	Bearing, Main	6	Standard
	3802071	YES	ADD	Set, Main Brg(.010)	A/R	0.25 mm Oversize
6	3929022	YES	ADD	Bearing, Main	7	0.25 mm Oversize
7	3283065	YES	ADD	Bearing, Crankshaft Thrust	1	0.25 mm Oversize
8	3929017	YES	ADD	Bearing, Main	6	0.25 mm Oversize
	3802072	YES	ADD	Set, Main Brg(.020)	A/R	0.50 mm Oversize
6	3929023	YES	ADD	Bearing, Main	7	0.50 mm Oversize
7	3283066	YES	ADD	Bearing, Crankshaft Thrust	1	
8	3929018	YES	ADD	Bearing, Main	6	0.50 mm Oversize
	3802073	YES	ADD	Set, Main Brg(.030)	A/R	0.75 mm Oversize
6	3929024	YES	ADD	Bearing, Main	7	0.75 mm Oversize
7	3283067	YES	ADD	Bearing, Crankshaft Thrust	1	0.75 mm Oversize
8	3929019	YES	ADD	Bearing, Main	6	0.75 mm Oversize
	3802074	YES	ADD	Set, Main Brg(.040)	A/R	1.00 mm Oversize
6	3929024	YES	ADD	Bearing, Main	7	0.75 mm Oversize
7	3283068	YES	ADD	Bearing, Crankshaft Thrust	1	1.00 mm Oversize
8	3929019	YES	ADD	Bearing, Main	6	0.75 mm Oversize
	3802702	YES	ADD	Bearing, Crankshaft Thrust	A/R	0.50 mm Oversize
6	3929023	YES	ADD	Bearing, Main	1	0.50 mm Oversize
7	3283066	YES	ADD	Bearing, Crankshaft Thrust	1	
	3802704	YES	ADD	Bearing, Crankshaft Thrust	A/R	1.00 mm Oversize
6	3929025	YES	ADD	Bearing, Main	1	1.00 mm Oversize
7	3283068	YES	ADD	Bearing, Crankshaft Thrust	1	1.00 mm Oversize
				$Service Parts		
9	3926126	YES	ADD	Rear Seal, Wear Sleeve Kit	A/R	Rear
10	3802820	YES	ADD	Front Seal, Wearsleeve Kit	A/R	Front

CYLINDER HEAD

Electronic Parts Catalog - Option Detail				
Option	Group	Graphic	Film Card	Date
PP40426	02.01	pp972gn	T	9-Jun-10
Engines	ISD4.5 CM2150, B5.9 LPG Plus CM556, G5.9, ISB 5.9 G CM2180, B4.5s, ISF3.8 CM2220 AN, ISB6.7 CM2250, B4.5 RGT, ISB CM800, QSB5.9-44 CM550, B5.9 G, G3.9, ISBe4 CM850, ISD6.7 CM2150, ISD6.7 CM2150 SN, QSB6.7 CM2250, QSB3.9-30 CM550, QSB5.9-30 CM550, B Gas Plus CM556, B6.7s, ISB CM2150, ISD4.5 CM2150 SN, ISB CM850, B LPG Plus CM556, B4.5, B3.9, ISF2.8 CM2220 AN, ISB6.7 CM2150 SN, QSB6.7 CM850, ISBe4 CM2150, G5.9 CM558, ISB6.7 CM2150 SQ, ISB4.5 CM2150 SN, ISB CM550, QSB5.9 CM850, B Gas International CM556, QSB4.5-30 CM550, ISBe CM800, ISBe5 CM2150 SN, QSB4.5 CM850, B5.9, ISBe CM850			

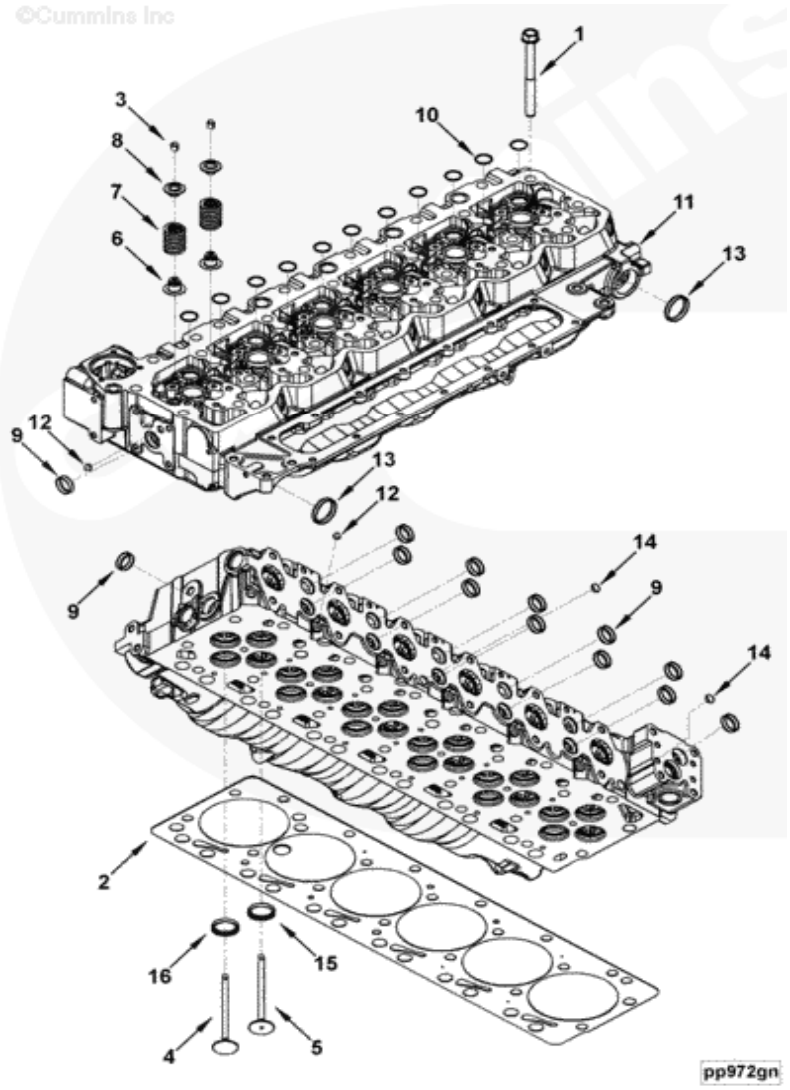

Ref No	Part Number	For-Sale	Shopping Cart	Part Name	Required	Remarks
	PP40426	NO		Cylinder Head		Cylinder Head
1	3927063	YES	ADD	Screw, Hexagon Flange Head Cap	26	
2	4932210	YES	ADD	Gasket, Cylinder Head	1	
	4988954	YES	ADD	Head, Cylinder	1	Recon Equivalent 4988954 NX
	3802967	YES	ADD	Kit, Exhaust Valve	12	
3	3940123	YES	ADD	Collet, Valve	2	
4	3940734	NO		Valve, Exhaust	1	Serviced as 3802967

	3802924	YES	ADD	Kit, Intake Valve	12	
3	3940123	YES	ADD	Collet, Valve	2	
5	3940735	NO		Valve, Intake	1	Serviced as 3802924
6	3955393	YES	ADD	Seal, Valve Stem	1	
6	3955393	YES	ADD	Seal, Valve Stem	12	
7	4936080	YES	ADD	Spring, Valve	24	
8	3943198	YES	ADD	Retainer, Valve Spring	24	
	4988953	NO		Head, Cylinder	1	
9	3914035	YES	ADD	Plug, Expansion	13	
10	3920706	YES	ADD	Plug, Expansion	11	
11	4983047	NO		Head, Cylinder	1	
12	3007632	YES	ADD	Plug, Expansion	7	
13	3945094	YES	ADD	Plug, Expansion	2	
14	3945095	YES	ADD	Plug, Expansion	2	
15	3943449	YES	ADD	Insert, Valve	12	Standard
16	3943450	YES	ADD	Insert, Valve	12	Standard
				$Service Parts		
15	3939719	YES	ADD	Insert, Valve	A/R	0.127 mm Oversize
15	3939720	YES	ADD	Insert, Valve	A/R	0.254 mm Oversize
15	3939721	YES	ADD	Insert, Valve	A/R	0.508 mm Oversize
16	3939723	YES	ADD	Insert, Valve	A/R	0.127 mm Oversize
16	3939724	YES	ADD	Insert, Valve	A/R	0.254 mm Oversize
16	3939725	YES	ADD	Insert, Valve	A/R	0.508 mm Oversize

DRIVE,FAN

Electronic Parts Catalog - Option Detail				
Option	Group	Graphic	Film Card	Date
FA9335-03	08.03	fa901gq	T	6-Nov-03
Engines	ISD4.5 CM2150, B5.9 LPG Plus CM556, G5.9, ISB 5.9 G CM2180, B4.5s, ISF3.8 CM2220 AN, ISB6.7 CM2250, B4.5 RGT, ISB CM800, QSB5.9-44 CM550, B5.9 G, G3.9, ISBe4 CM850, ISD6.7 CM2150, ISD6.7 CM2150 SN, QSB6.7 CM2250, QSB3.9-30 CM550, QSB5.9-30 CM550, B Gas Plus CM556, B6.7s, ISB CM2150, ISD4.5 CM2150 SN, ISB CM850, B LPG Plus CM556, B4.5, B3.9, ISF2.8 CM2220 AN, ISB6.7 CM2150 SN, QSB6.7 CM850, ISBe4 CM2150, G5.9 CM558, ISB6.7 CM2150 SQ, ISB4.5 CM2150 SN, ISB CM550, QSB5.9 CM850, B Gas International CM556, QSB4.5-30 CM550, ISBe CM800, ISBe5 CM2150 SN, QSB4.5 CM850, B5.9, ISBe CM850			

©Cummins Inc

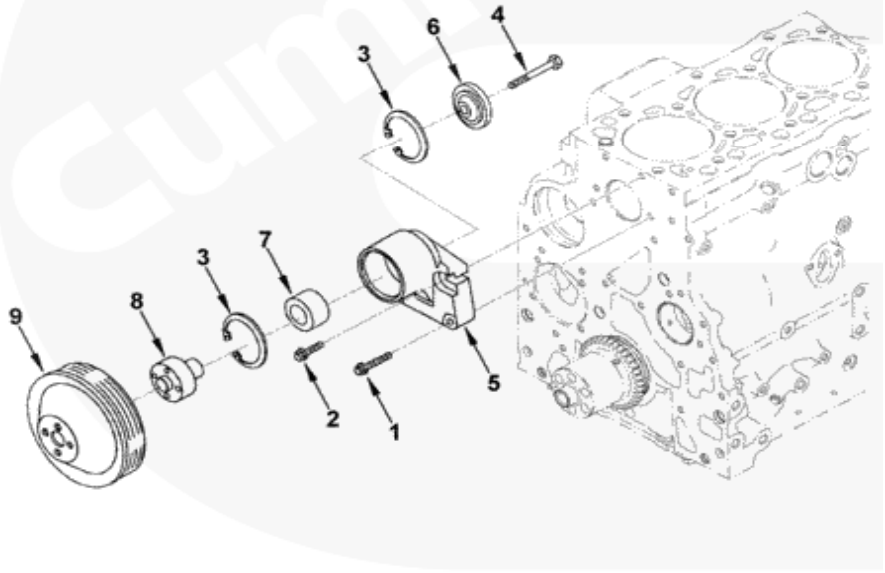

fa901gq

Ref No	Part Number	For-Sale	Shopping Cart	Part Name	Required	Remarks
	FA9335-03	NO		Fan Drive		Fan Drive
						Fan Drive Ratio: 1.1:1
						Fan Drive CL From Crank
						CL (mm): 345 fan
						Fan Drive CL From Engine
						CL (mm): 0
						Fan Pilot Diameter(mm):
						25.4

						Fan Mounting Bolt Circle
						(mm): 60
						Fan Pulley Thickness (mm): 5
						Fan Pulley Diameter Over
						2.5mm Gage Balls (mm): 159.13
1	3928873	YES	ADD	Screw, Hexagon Flange Head Cap	2	M8 X 1.25 X 40
2	2830411	YES	ADD	Screw, Hexagon Flange Head Cap	2	
	3958412	YES	ADD	Support, Fan	1	
3	3035960	YES	ADD	Ring, Retaining	2	
4	3907769	YES	ADD	Screw, Hexagon Head Cap	1	M10 X 1.75 X 70
5	3958413	NO		Support, Fan	1	
6	3923044	YES	ADD	Retainer, Fan Hub	1	
7	3910739	YES	ADD	Bearing, Ball	1	
8	3911924	YES	ADD	Hub, Fan	1	
9	3914462	YES	ADD	Pulley, Fan	1	

ENG CONTROL WIRING HARNESS

Electronic Parts Catalog - Option Detail				
Option	Group	Graphic	Film Card	Date
WR9392-01	05.06.1	wr960gu	T	7-Sep-07
Engines	ISD4.5 CM2150, B5.9 LPG Plus CM556, G5.9, ISB 5.9 G CM2180, B4.5s, ISF3.8 CM2220 AN, ISB6.7 CM2250, B4.5 RGT, ISB CM800, QSB5.9-44 CM550, B5.9 G, G3.9, ISBe4 CM850, ISD6.7 CM2150, ISD6.7 CM2150 SN, QSB6.7 CM2250, QSB3.9-30 CM550, QSB5.9-30 CM550, B Gas Plus CM556, B6.7s, ISB CM2150, ISD4.5 CM2150 SN, ISB CM850, B LPG Plus CM556, B4.5, B3.9, ISF2.8 CM2220 AN, ISB6.7 CM2150 SN, QSB6.7 CM850, ISBe4 CM2150, G5.9 CM558, ISB6.7 CM2150 SQ, ISB4.5 CM2150 SN, ISB CM550, QSB5.9 CM850, B Gas International CM556, QSB4.5-30 CM550, ISBe CM800, ISBe5 CM2150 SN, QSB4.5 CM850, B5.9, ISBe CM850			

©Cummins Inc

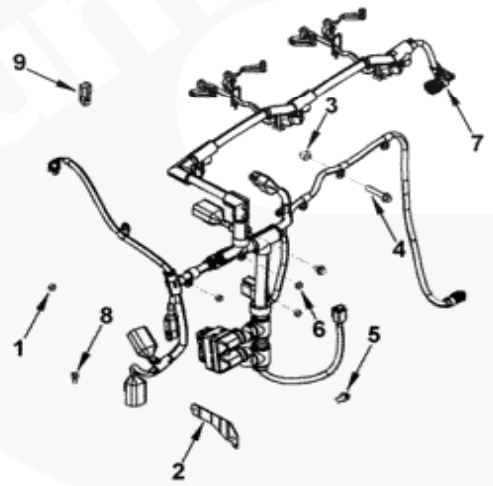

wr960gu

Ref No	Part Number	For-Sale	Shopping Cart	Part Name	Required	Remarks
	WR9392-01	NO		ENG Control Wiring Harness		ENG Control Wiring Harness
						Engine Family: "B" Series
						Engine Cylinders: 6 engine
						design phase: Tier3
						Turbocharger Type: Wgt - All
						OEM Connector Location:
						Vertical from crank to CL
						(mm): 225.3

						horizontal from engine to CL
						(mm): 233.4
						horizontal from FFOB
						to CL (mm): - 81.8
						OEM Connector Type: 50 Pin
						J1939 connector location: On
						harness vertical from crank
						to CL (mm): 136.7
						horizontal from engine to CL
						(mm): 233.4
						horizontal from FFOB
						to CL (mm): -
						81.8 KOM may replace 3287699
						and 4939039 harness with
						4942572 and 4942573
						respectively.
1	3900589	YES	ADD	Nut, Hexagon Flange	2	M8 X 1.25
2	4933023	YES	ADD	Brace, Wiring	1	
3	3918363	YES	ADD	Spacer, Mounting	2	
4	3093956	YES	ADD	Screw, Hexagon Flange Head Cap	1	M8 X 1.25 X 12
5	3900627	YES	ADD	Screw, Hexagon Flange Head Cap	2	M6 X 1.00 X 14
6	3906216	YES	ADD	Nut, Hexagon Flange	3	M6 X 1.00
7	4939039	YES	ADD	Harness, Electronic Control Module Wiring	1	
8	3900626	YES	ADD	Screw, Hexagon Flange Head Cap	1	M6 X 1.00 X 12
9	4934302	YES	ADD	Cover, Protective	1	

ENGINE CONTROL MODULE

Electronic Parts Catalog - Option Detail				
Option	Group	Graphic	Film Card	Date
PH9203-01	05.06.1	ph959gt	T	9-Jun-07
Engines	ISD4.5 CM2150, B5.9 LPG Plus CM556, G5.9, ISB 5.9 G CM2180, B4.5s, ISF3.8 CM2220 AN, ISB6.7 CM2250, B4.5 RGT, ISB CM800, QSB5.9-44 CM550, B5.9 G, G3.9, ISBe4 CM850, ISD6.7 CM2150, ISD6.7 CM2150 SN, QSB6.7 CM2250, QSB3.9-30 CM550, QSB5.9-30 CM550, B Gas Plus CM556, B6.7s, ISB CM2150, ISD4.5 CM2150 SN, ISB CM850, B LPG Plus CM556, B4.5, B3.9, ISF2.8 CM2220 AN, ISB6.7 CM2150 SN, QSB6.7 CM850, ISBe4 CM2150, G5.9 CM558, ISB6.7 CM2150 SQ, ISB4.5 CM2150 SN, ISB CM550, QSB5.9 CM850, B Gas International CM556, QSB4.5-30 CM550, ISBe CM800, ISBe5 CM2150 SN, QSB4.5 CM850, B5.9, ISBe CM850			

©Cummins Inc

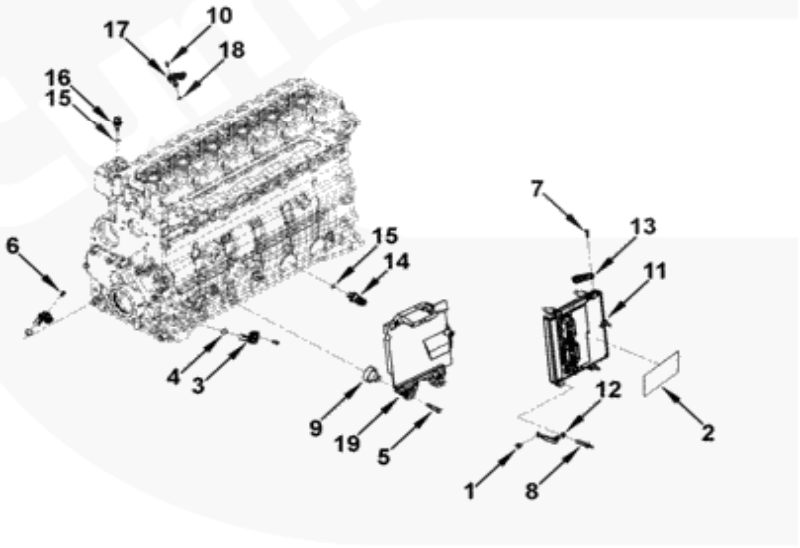

ph959gt

Ref No	Part Number	For-Sale	Shopping Cart	Part Name	Required	Remarks
	PH9203-01	NO		Engine Control Module		Engine Control Module
						Engine Control System: E2 I
						ECM version: CM850 module
						location (mm): N/A ambient
						air pressure sensor included:
						Yes
						Intake manifold temp sensor
						manufacturer: Siemens

						Oil Pressure Sensor: Switch
						Oil Pressure Sensor Location:
						Front Cover
						Speed Sensor Location:
						Damper Pulley
						Engine Family: "B" Series
						Coolant Temp Sensor:
						Standard Tolerance
						Unique Characteristic: To be
						structured with square air
						intake manifold arrangement
						kcec may use the 4936491
						socket head cap screw in
						place of the 3957849 socket
						head cap screw.
1	3093956	YES	ADD	Screw, Hexagon Flange Head Cap	1	M8 X 1.25 X 12
2	4894985	YES	ADD	Dataplate	1	
	3408529	YES	ADD	Sensor, Position	2	Cam or Crank
3	3408530	NO		Sensor, Position	1	Cam or Crank
4	4010643	YES	ADD	Seal, O Ring	1	
5	3901445	YES	ADD	Screw, Hexagon Flange Head Cap	3	M8 X 1.25 X 45
6	3906391	YES	ADD	Screw, Socket Head Cap	2	M6 X 1.00 X 16
7	3920854	YES	ADD	Screw, Captive Washer Cap	1	M5 X 0.80 X 20
8	3947206	YES	ADD	Screw, Studded Flange Cap	5	
9	4899791	YES	ADD	Isolator, Vibration	3	
10	3957849	YES	ADD	Screw, Socket Head Cap	1	
	4921797	YES	ADD	Module, Electronic Control	1	Customer to Purchase 4921776
11	4921776	YES	ADD	Module, Electronic Control	1	Recon Equiv. 4921776 NX/RX
12	3977357	YES	ADD	Wire, Ground	1	
13	4076493	YES	ADD	Sensor, Pressure	1	Ambient Air
14	4076930	YES	ADD	Switch, Pressure	1	Oil
15	4921574	YES	ADD	Seal, O Ring	1	
	4088750	YES	ADD	Sensor, Temperature	1	Coolant or Oil or Fuel
15	4921574	YES	ADD	Seal, O Ring	1	
16	4088751	NO		Sensor, Temperature	1	
17	4921322	YES	ADD	Sensor, Pressure Temperature	1	Intake Manifold
18	4903482	YES	ADD	Seal, O Ring	1	
19	4936170	YES	ADD	Bracket, Etr Cnt Module	1	

ENGINE COOLANT VENT

Electronic Parts Catalog - Option Detail				
Option	Group	Graphic	Film Card	Date
RP9045-01	08.13.1	rp950ge	T	22-May-06
Engines	ISD4.5 CM2150, B5.9 LPG Plus CM556, G5.9, ISB 5.9 G CM2180, B4.5s, ISF3.8 CM2220 AN, ISB6.7 CM2250, B4.5 RGT, ISB CM800, QSB5.9-44 CM550, B5.9 G, G3.9, ISBe4 CM850, ISD6.7 CM2150, ISD6.7 CM2150 SN, QSB6.7 CM2250, QSB3.9-30 CM550, QSB5.9-30 CM550, B Gas Plus CM556, B6.7s, ISB CM2150, ISD4.5 CM2150 SN, ISB CM850, B LPG Plus CM556, B4.5, B3.9, ISF2.8 CM2220 AN, ISB6.7 CM2150 SN, QSB6.7 CM850, ISBe4 CM2150, G5.9 CM558, ISB6.7 CM2150 SQ, ISB4.5 CM2150 SN, ISB CM550, QSB5.9 CM850, B Gas International CM556, QSB4.5-30 CM550, ISBe CM800, ISBe5 CM2150 SN, QSB4.5 CM850, B5.9, ISBe CM850			

©Cummins Inc

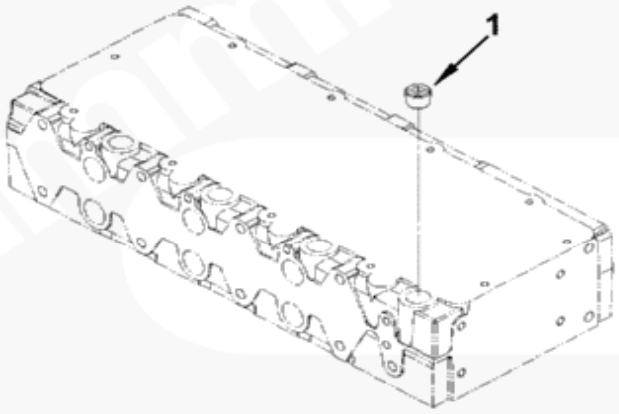

rp950ge

Ref No	Part Number	For-Sale	Shopping Cart	Part Name	Required	Remarks
	RP9045-01	NO		Engine Coolant Vent		Engine Coolant Vent
						vent provision type:
						Customer supplied engine
						interface: 1/4in. NPTF
						Centerline of engine to OEM
						interface (mm): -76
						Centerline of crank to OEM
						interface (mm): 429 front
						face of block to OEM
						interface (mm): -156.5.
1	4933317	YES	ADD	Plug, Pipe	1	

FAN DRIVE MOUNTING

Electronic Parts Catalog - Option Detail				
Option	Group	Graphic	Film Card	Date
FA9739-01	08.03	fa900zq	T	16-Sep-02
Engines	ISD4.5 CM2150, B5.9 LPG Plus CM556, G5.9, ISB 5.9 G CM2180, B4.5s, ISF3.8 CM2220 AN, ISB6.7 CM2250, B4.5 RGT, ISB CM800, QSB5.9-44 CM550, B5.9 G, G3.9, ISBe4 CM850, ISD6.7 CM2150, ISD6.7 CM2150 SN, QSB6.7 CM2250, QSB3.9-30 CM550, QSB5.9-30 CM550, B Gas Plus CM556, B6.7s, ISB CM2150, ISD4.5 CM2150 SN, ISB CM850, B LPG Plus CM556, B4.5, B3.9, ISF2.8 CM2220 AN, ISB6.7 CM2150 SN, QSB6.7 CM850, ISBe4 CM2150, G5.9 CM558, ISB6.7 CM2150 SQ, ISB4.5 CM2150 SN, ISB CM550, QSB5.9 CM850, B Gas International CM556, QSB4.5-30 CM550, ISBe CM800, ISBe5 CM2150 SN, QSB4.5 CM850, B5.9, ISBe CM850			

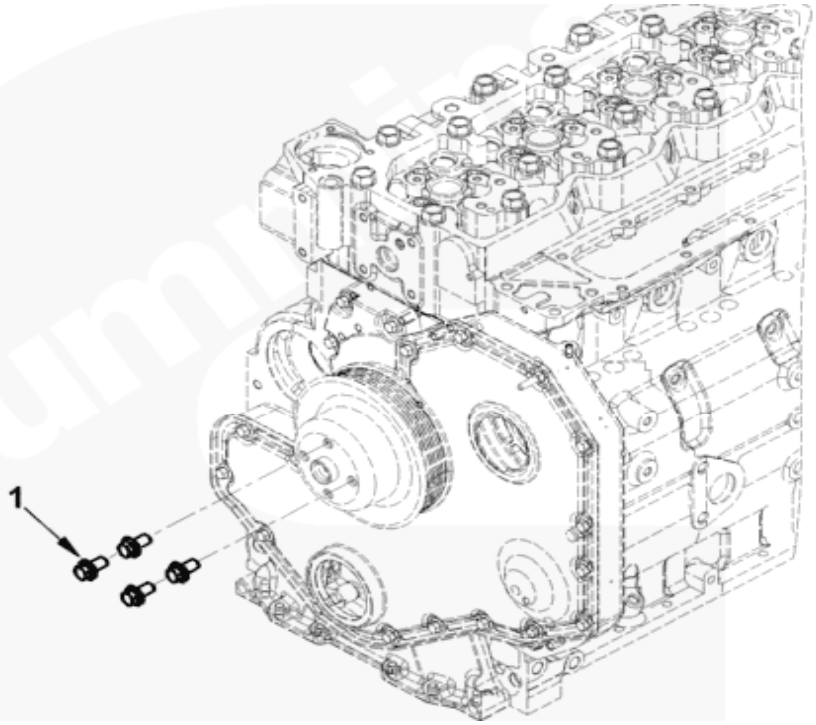

fa900zq

Ref No	Part Number	For-Sale	Shopping Cart	Part Name	Required	Remarks
	FA9739-01	NO		Fan Drive Mounting		Fan Drive Mounting
						Thread Size: M10 X 1.5
						Capscrew Length (mm): 20
						Clamping Plate Thickness
						(mm): N/A
						Clamping Plate Bolt Circle:
						N/A
1	3903990	YES	ADD	Screw, Hexagon Flange Head Cap	4	M10 X 1.50 X 20

FAN PILOT SPACER

Electronic Parts Catalog - Option Detail				
Option	Group	Graphic	Film Card	Date
SP9077	08.05	sp900zb	T	20-Oct-01
Engines	ISD4.5 CM2150, B5.9 LPG Plus CM556, G5.9, ISB 5.9 G CM2180, B4.5s, ISF3.8 CM2220 AN, ISB6.7 CM2250, B4.5 RGT, ISB CM800, QSB5.9-44 CM550, B5.9 G, G3.9, ISBe4 CM850, ISD6.7 CM2150, ISD6.7 CM2150 SN, QSB6.7 CM2250, QSB3.9-30 CM550, QSB5.9-30 CM550, B Gas Plus CM556, B6.7s, ISB CM2150, ISD4.5 CM2150 SN, ISB CM850, B LPG Plus CM556, B4.5, B3.9, ISF2.8 CM2220 AN, ISB6.7 CM2150 SN, QSB6.7 CM850, ISBe4 CM2150, G5.9 CM558, ISB6.7 CM2150 SQ, ISB4.5 CM2150 SN, ISB CM550, QSB5.9 CM850, B Gas International CM556, QSB4.5-30 CM550, ISBe CM800, ISBe5 CM2150 SN, QSB4.5 CM850, B5.9, ISBe CM850			

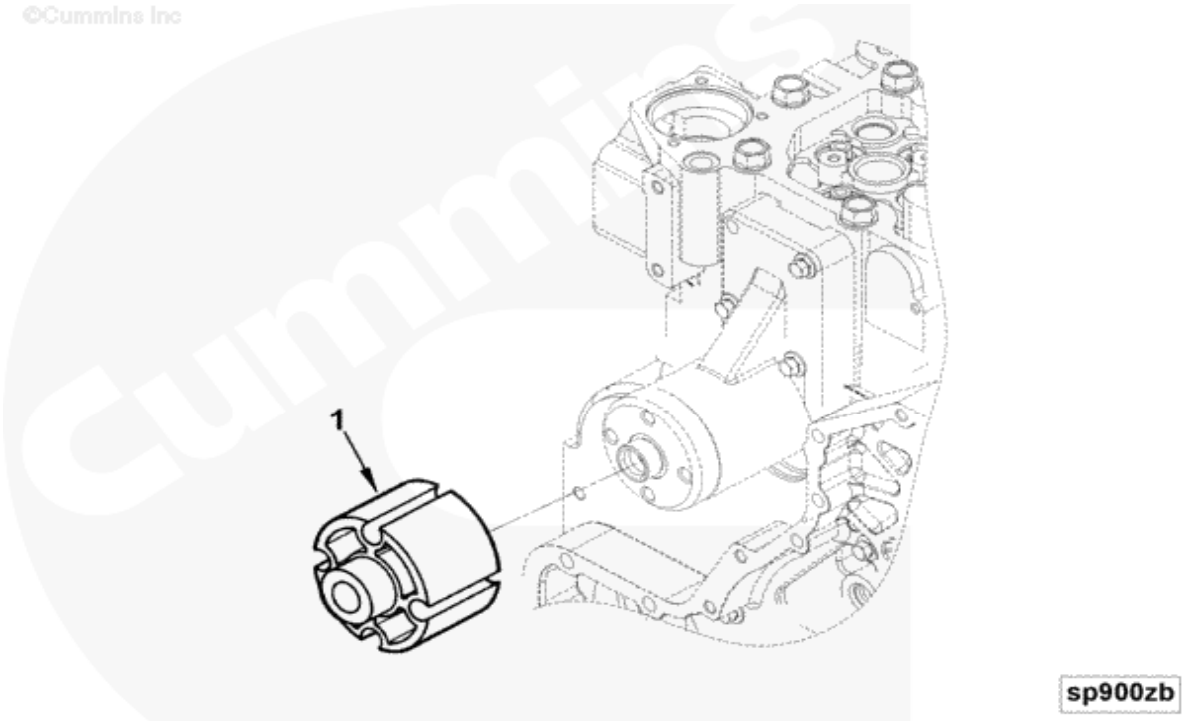

Ref No	Part Number	For-Sale	Shopping Cart	Part Name	Required	Remarks
	SP9077	NO		Fan Pilot Spacer		MR - Fan Pilot Spacer
						Spacer Thickness (mm): 63.5
						Fan Mounting Bolt Circle
						(mm): 4 x 60
						Fan Spacer
						Pilot Diameter (mm): 25.4
						Fan Pilot Diameter (mm):
						25.4
1	3910131	YES	ADD	Spacer, Fan Pilot	1	

FLYWHEEL

Electronic Parts Catalog - Option Detail				
Option	Group	Graphic	Film Card	Date
FW90082	16.02	fw952zn	T	15-Feb-06
Engines	ISD4.5 CM2150, B5.9 LPG Plus CM556, G5.9, ISB 5.9 G CM2180, B4.5s, ISF3.8 CM2220 AN, ISB6.7 CM2250, B4.5 RGT, ISB CM800, QSB5.9-44 CM550, B5.9 G, G3.9, ISBe4 CM850, ISD6.7 CM2150, ISD6.7 CM2150 SN, QSB6.7 CM2250, QSB3.9-30 CM550, QSB5.9-30 CM550, B Gas Plus CM556, B6.7s, ISB CM2150, ISD4.5 CM2150 SN, ISB CM850, B LPG Plus CM556, B4.5, B3.9, ISF2.8 CM2220 AN, ISB6.7 CM2150 SN, QSB6.7 CM850, ISBe4 CM2150, G5.9 CM558, ISB6.7 CM2150 SQ, ISB4.5 CM2150 SN, ISB CM550, QSB5.9 CM850, B Gas International CM556, QSB4.5-30 CM550, ISBe CM800, ISBe5 CM2150 SN, QSB4.5 CM850, B5.9, ISBe CM850			

©Cummins Inc

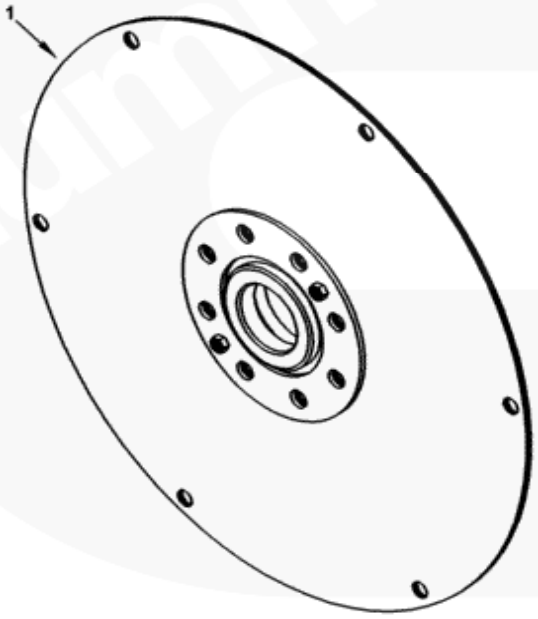

fw952zn

Ref No	Part Number	For-Sale	Shopping Cart	Part Name	Required	Remarks
	FW90082	NO		Flywheel		Flywheel
						ring gear diametral pitch:
						8/10 ring gear tooth count:
						138 ring gear outside
						diameter (mm): 442.77
						supplier:
						Allison type: Flexplate max
						full load rated speed (not to

						exceed): 3500 flywheel
						inertia: N/A flywheel
						mounting flange to ring gear
						leading edge (mm): 16.13
						mounting web thickness (mm):
						18.0
						Pilot Bearing Bore Diameter
						(mm): 45.3 clutch/t. C.
						mounting bolt circle count:
						1 clutch/t. C. mounting bolt
						circle count: 6 clutch/t.
						C. bolt circle diameter (mm):
						373 clutch/t. C. mounting
						hole spacing: Equal
						clutch/t. C. mounting hole
						size: 10.9mm thru Cummins
						material standard: 30,218
						Intended Drive Hardware:
						Allison Md transmission.
1	3937020	YES	ADD	Flexplate	1	

FLYWHEEL HOUSING

Electronic Parts Catalog - Option Detail				
Option	Group	Graphic	Film Card	Date
FH9490-03	16.01	fh956gf	T	10-Mar-08
Engines	ISD4.5 CM2150, B5.9 LPG Plus CM556, G5.9, ISB 5.9 G CM2180, B4.5s, ISF3.8 CM2220 AN, ISB6.7 CM2250, B4.5 RGT, ISB CM800, QSB5.9-44 CM550, B5.9 G, G3.9, ISBe4 CM850, ISD6.7 CM2150, ISD6.7 CM2150 SN, QSB6.7 CM2250, QSB3.9-30 CM550, QSB5.9-30 CM550, B Gas Plus CM556, B6.7s, ISB CM2150, ISD4.5 CM2150 SN, ISB CM850, B LPG Plus CM556, B4.5, B3.9, ISF2.8 CM2220 AN, ISB6.7 CM2150 SN, QSB6.7 CM850, ISBe4 CM2150, G5.9 CM558, ISB6.7 CM2150 SQ, ISB4.5 CM2150 SN, ISB CM550, QSB5.9 CM850, B Gas International CM556, QSB4.5-30 CM550, ISBe CM800, ISBe5 CM2150 SN, QSB4.5 CM850, B5.9, ISBe CM850			

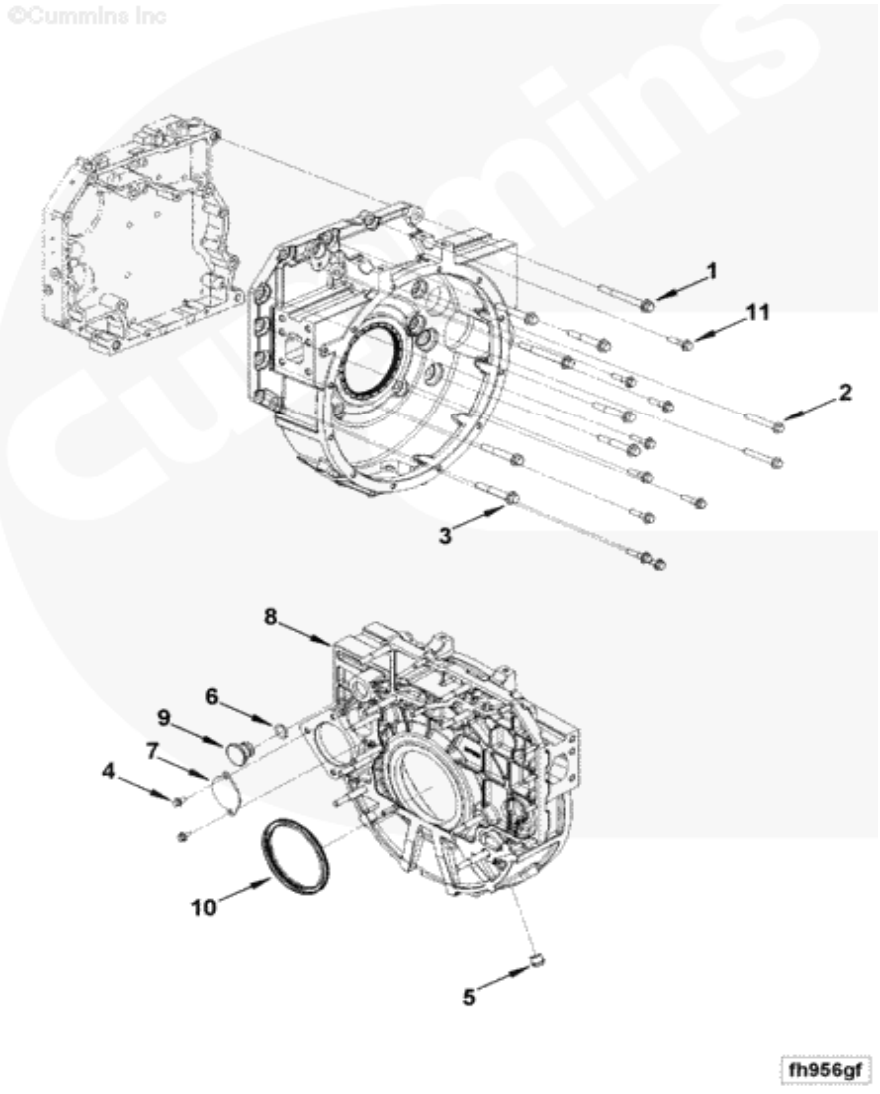

Ref No	Part Number	For-Sale	Shopping Cart	Part Name	Required	Remarks
	FH9490-03	NO		Flywheel Housing		Flywheel Housing
						Structure Code: Mr 03 Opt
						Engine Family: B
						Clutch Type: Dry
						Starter Bore Position (deg):
						92 fly housing to block
						mounting pattern: 8 x m12
						x1.75 and 2 x M10X1.5 starter

						motor flange SAE type: #1 - 3
						bolt 90 degree fly. Housing
						SAE size: 2 starter pilot
						bore diameter (mm): 88.9
						Item Supplied:
						Flywheel Housing
						Starter Bore Location (mm):
						From engine centerline (mm):
						-234.1 from cranshaft
						centerline (mm): -8.0 angle
						to starter bore mounting hole
						pattern: 0 degrees
						Starter mounting hole thread
						size: M10X1.5
						Starter mounting face
						offset(mm): 5.8
						Starter Bore Center Distance
						(mm): 234.2
						Starter Bore Angle From
						Horiz. Centerline (deg): -2
						rear engine PTO included: No
						REPTO gear thickness (mm):
						N/A REPTO gear drive ratio:
						N/A
						Tachometer sensor mounting
						hole count: 1
						Material: Aluminium
						Engine Mount Type: Pad
						mounting pad hole
						description: 6 x m12 x1.75
						mounting pad top hole
						location (mm): 179.0
						mounting pad angle: 0
						degrees mounting arm hole
						size: N/A trunnion diameter
						(mm): N/A trunnion location:
						N/A trans mounting hole
						count/thread description: 12
						x M10X1.5
						Tachometer drive
						location/size: 150 degrees,
						3/4-16 UNF
						Additional Info/features:
						3/4-NPTF Drain Hole up to
						4011nm bending moment capable
						at transmission mounting
						flange.
1	3089188	YES	ADD	Screw, Hexagon Flange Head Cap	2	
2	3900679	YES	ADD	Screw, Hexagon Flange Head Cap	2	M10 X 1.50 X 80
3	3914177	YES	ADD	Screw, Hexagon Flange Head Cap	6	M12 X 1.75 X 80
	3973062	YES	ADD	Housing, Flywheel	1	
4	3925883	YES	ADD	Screw, Hexagon Flange Head Cap	2	M8 X 1.25 X 16
5	3904181	YES	ADD	Plug, Threaded	1	3/4 - 16 UNF
6	3910260	YES	ADD	Seal, O Ring	1	
7	3908095	YES	ADD	Plate, Cover	1	
8	4991575	YES	ADD	Housing, Flywheel	1	
9	3910248	YES	ADD	Plug, O Ring	1	
10	4988952	YES	ADD	Seal, Oil	1	
11	3903464	YES	ADD	Screw, Hexagon Flange Head Cap	9	M10 X 1.50 X 40

FLYWHEEL HOUSING MOUNTING

Electronic Parts Catalog - Option Detail				
Option	Group	Graphic	Film Card	Date
FH9629	16.01	fh960gb	T	26-Jun-06
Engines	ISD4.5 CM2150, B5.9 LPG Plus CM556, G5.9, ISB 5.9 G CM2180, B4.5s, ISF3.8 CM2220 AN, ISB6.7 CM2250, B4.5 RGT, ISB CM800, QSB5.9-44 CM550, B5.9 G, G3.9, ISBe4 CM850, ISD6.7 CM2150, ISD6.7 CM2150 SN, QSB6.7 CM2250, QSB3.9-30 CM550, QSB5.9-30 CM550, B Gas Plus CM556, B6.7s, ISB CM2150, ISD4.5 CM2150 SN, ISB CM850, B LPG Plus CM556, B4.5, B3.9, ISF2.8 CM2220 AN, ISB6.7 CM2150 SN, QSB6.7 CM850, ISBe4 CM2150, G5.9 CM558, ISB6.7 CM2150 SQ, ISB4.5 CM2150 SN, ISB CM550, QSB5.9 CM850, B Gas International CM556, QSB4.5-30 CM550, ISBe CM800, ISBe5 CM2150 SN, QSB4.5 CM850, B5.9, ISBe CM850			

©Cummins Inc

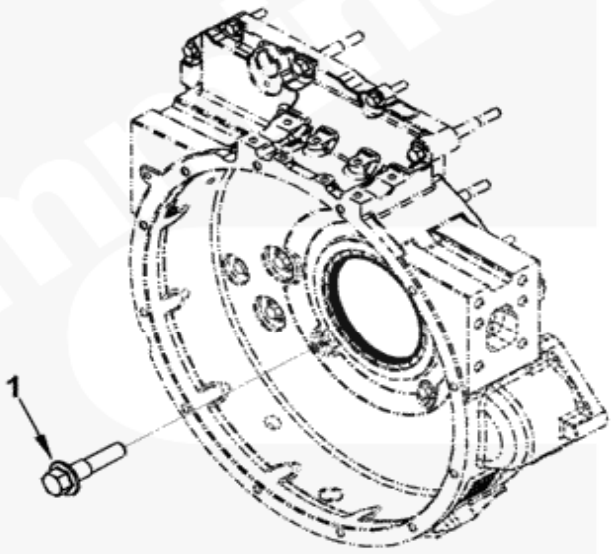

fh960gb

Ref No	Part Number	For-Sale	Shopping Cart	Part Name	Required	Remarks
	FH9629	NO		Flywheel Housing Mounting		Flywheel Housing Mounting
						1 x M10 x 1.5 40
						long capscrew
						For use without engine
						balancer.
1	3903464	YES	ADD	Screw, Hexagon Flange Head Cap	1	M10 X 1.50 X 40

FLYWHEEL MOUNTING

Electronic Parts Catalog - Option Detail				
Option	Group	Graphic	Film Card	Date
FW9715	16.02.1	fw951zu	T	10-Feb-03
Engines	ISD4.5 CM2150, B5.9 LPG Plus CM556, G5.9, ISB 5.9 G CM2180, B4.5s, ISF3.8 CM2220 AN, ISB6.7 CM2250, B4.5 RGT, ISB CM800, QSB5.9-44 CM550, B5.9 G, G3.9, ISBe4 CM850, ISD6.7 CM2150, ISD6.7 CM2150 SN, QSB6.7 CM2250, QSB3.9-30 CM550, QSB5.9-30 CM550, B Gas Plus CM556, B6.7s, ISB CM2150, ISD4.5 CM2150 SN, ISB CM850, B LPG Plus CM556, B4.5, B3.9, ISF2.8 CM2220 AN, ISB6.7 CM2150 SN, QSB6.7 CM850, ISBe4 CM2150, G5.9 CM558, ISB6.7 CM2150 SQ, ISB4.5 CM2150 SN, ISB CM550, QSB5.9 CM850, B Gas International CM556, QSB4.5-30 CM550, ISBe CM800, ISBe5 CM2150 SN, QSB4.5 CM850, B5.9, ISBe CM850			

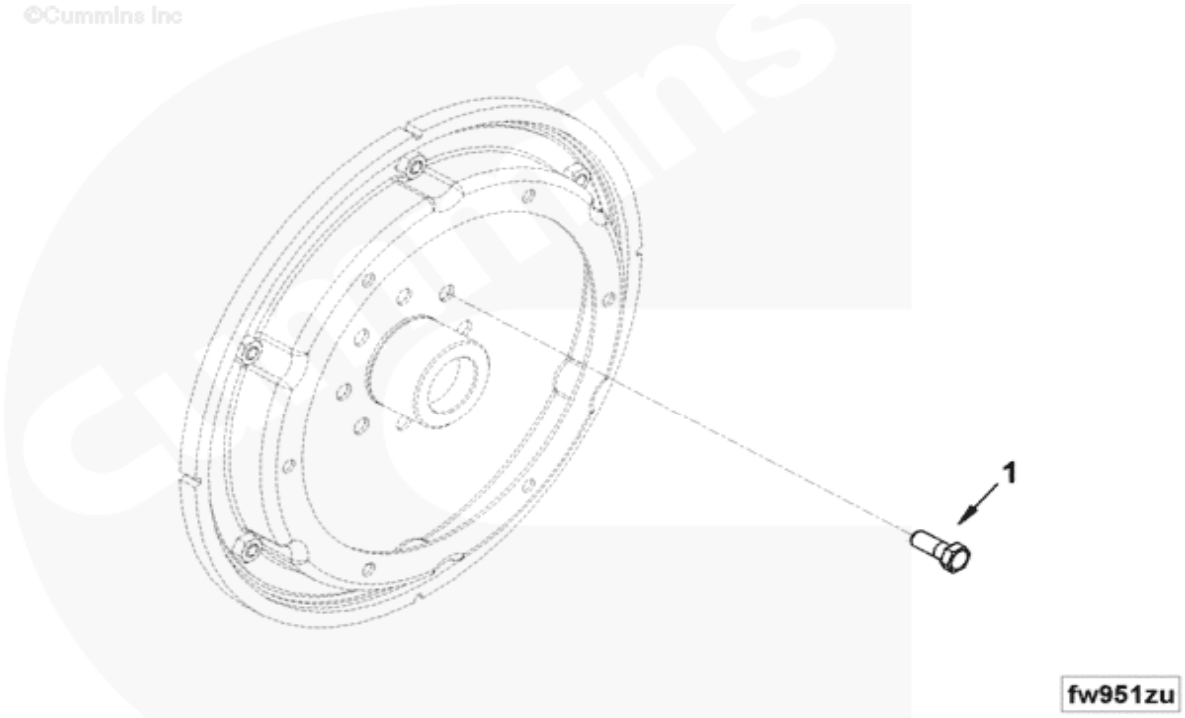

Ref No	Part Number	For-Sale	Shopping Cart	Part Name	Required	Remarks
	FW9715	NO		Flywheel Mounting		Flywheel Mounting
						Bolt Length: 35 mm
						Crank Adapter/Clamping Ring
						Thickness: 18 mm
						To Suit REPTO: No
						First Used With Allison MD
						Transmission.
						Note: Flexplate/Crank
						Adapter/Clamping Ring
						Supplied Assembled by
						Allison.
1	3931446	YES	ADD	Screw, Hexagon Head Cap	8	

FRONT ENGINE SUPPORT

Electronic Parts Catalog - Option Detail				
Option	Group	Graphic	Film Card	Date
EM9194	16.03	em951gb	T	19-Dec-01
Engines	ISD4.5 CM2150, B5.9 LPG Plus CM556, G5.9, ISB 5.9 G CM2180, B4.5s, ISF3.8 CM2220 AN, ISB6.7 CM2250, B4.5 RGT, ISB CM800, QSB5.9-44 CM550, B5.9 G, G3.9, ISBe4 CM850, ISD6.7 CM2150, ISD6.7 CM2150 SN, QSB6.7 CM2250, QSB3.9-30 CM550, QSB5.9-30 CM550, B Gas Plus CM556, B6.7s, ISB CM2150, ISD4.5 CM2150 SN, ISB CM850, B LPG Plus CM556, B4.5, B3.9, ISF2.8 CM2220 AN, ISB6.7 CM2150 SN, QSB6.7 CM850, ISBe4 CM2150, G5.9 CM558, ISB6.7 CM2150 SQ, ISB4.5 CM2150 SN, ISB CM550, QSB5.9 CM850, B Gas International CM556, QSB4.5-30 CM550, ISBe CM800, ISBe5 CM2150 SN, QSB4.5 CM850, B5.9, ISBe CM850			

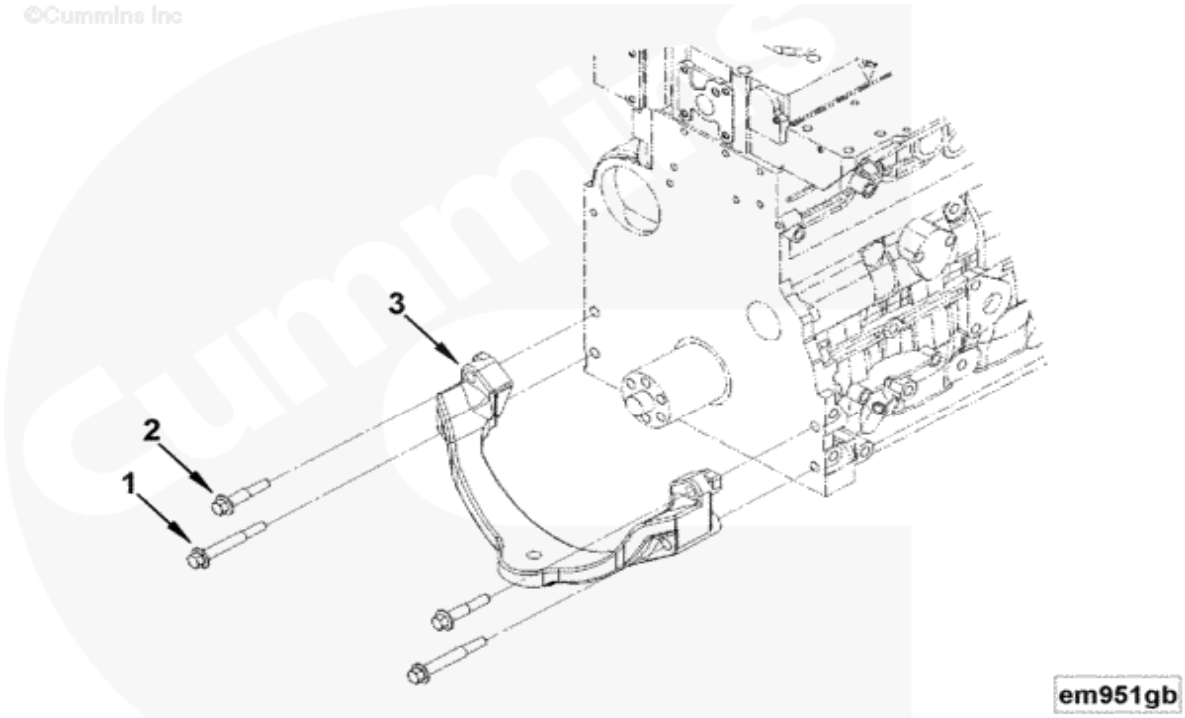

Ref No	Part Number	For-Sale	Shopping Cart	Part Name	Required	Remarks
	EM9194	NO		Front Engine Support		MR - Front Engine Support
						Engine Family: "B" Series
						Mount Location: Front
						Mount Type: Single
						Mounting Hole
						Size: M16 x 2.00-6 H
						Maximum Damper Diameter
						(mm): 250.0 (9.84 inch)
						Mount Material: 41,020
						Mounting Surface Below
						Crank Centerline(mm): 153.0
						(6.02 inch)
1	3902451	YES	ADD	Screw, Hexagon Flange Head Cap	2	M12 X 1.75 X 90
2	3937692	YES	ADD	Screw, Hexagon Flange Head Cap	2	M12 X 1.75 X 60
3	3955075	YES	ADD	Support, Front Engine	1	

FUEL FILTER LOCATION

Electronic Parts Catalog - Option Detail				
Option	Group	Graphic	Film Card	Date
FF9541-01	06.04	ff967gm	T	20-Aug-07
Engines	ISD4.5 CM2150, B5.9 LPG Plus CM556, G5.9, ISB 5.9 G CM2180, B4.5s, ISF3.8 CM2220 AN, ISB6.7 CM2250, B4.5 RGT, ISB CM800, QSB5.9-44 CM550, B5.9 G, G3.9, ISBe4 CM850, ISD6.7 CM2150, ISD6.7 CM2150 SN, QSB6.7 CM2250, QSB3.9-30 CM550, QSB5.9-30 CM550, B Gas Plus CM556, B6.7s, ISB CM2150, ISD4.5 CM2150 SN, ISB CM850, B LPG Plus CM556, B4.5, B3.9, ISF2.8 CM2220 AN, ISB6.7 CM2150 SN, QSB6.7 CM850, ISBe4 CM2150, G5.9 CM558, ISB6.7 CM2150 SQ, ISB4.5 CM2150 SN, ISB CM550, QSB5.9 CM850, B Gas International CM556, QSB4.5-30 CM550, ISBe CM800, ISBe5 CM2150 SN, QSB4.5 CM850, B5.9, ISBe CM850			

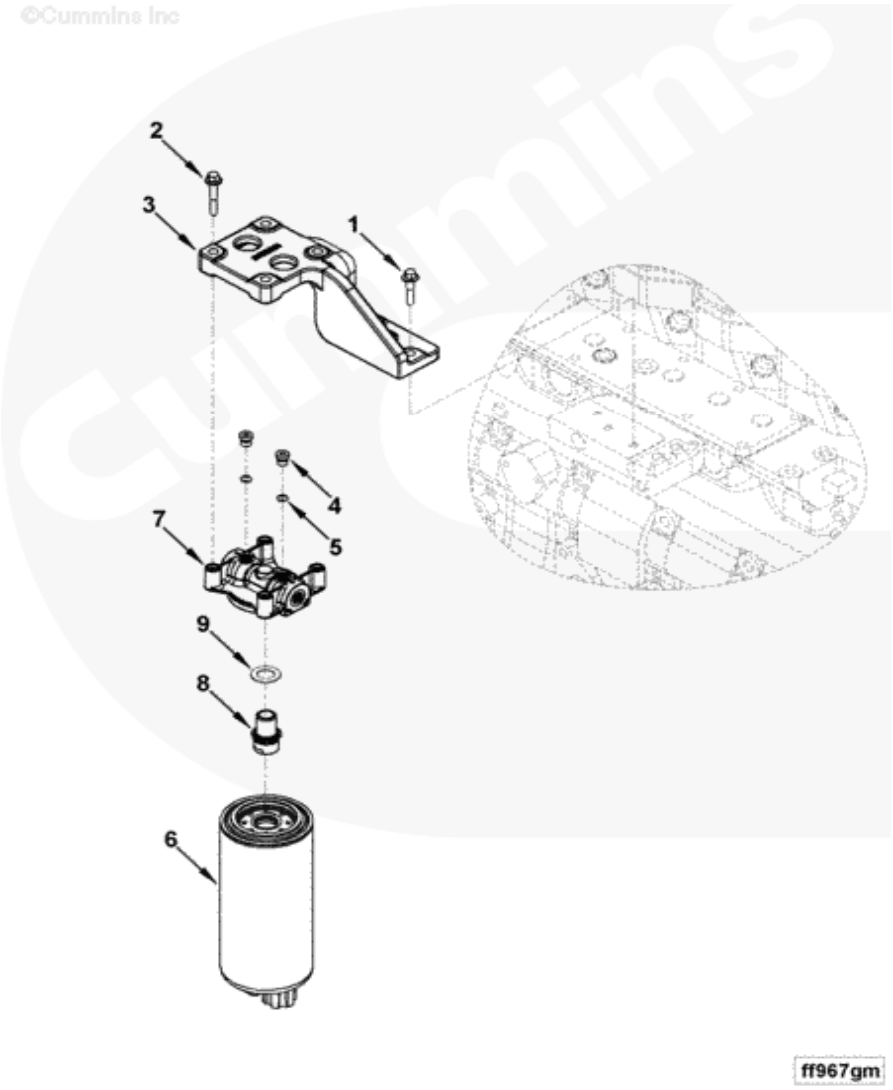

Ref No	Part Number	For-Sale	Shopping Cart	Part Name	Required	Remarks
	FF9541-01	NO		Fuel Filter Location		Fuel Filter Location
						Element Type: Single element
						style: Spin-on drain
						provision: No fuel heater
						provided: No fuel heater
						voltage: No water separator
						provision: No
						Location: Engine Mounted

						CCL to top of Canister (mm):
						417
						Engine CL to canister CL
						(mm): 316
						FFOB to canister CL (mm):
						-324 filter
						length (mm): 191 filter
						diameter (mm): 93.5 fuel
						filter fuel inlet location:
						CCL to inlet CL (mm): 439
						Engine CL to Inlet CL (mm):
						316
						FFOB to inlet CL (mm): -277
						Fuel Filter Outler Loc.:
						CCL to outlet CL (mm): 439
						Engine CL to Outlet CL
						(mm): 316
						FFOB to outlet CL (mm): -371
						absolute filtration
						(microns): 3
						Engine Family: "B" Series
1	3900632	YES	ADD	Screw, Hexagon Flange Head Cap	3	M8 X 1.25 X 35
2	3901445	YES	ADD	Screw, Hexagon Flange Head Cap	4	M8 X 1.25 X 45
3	4931860	YES	ADD	Support, Filter	1	
	3975125	YES	ADD	Filter, Fuel	1	
	3678923	YES	ADD	Plug, Threaded	2	M10 X 1 X 13.5
4	3678924	NO		Plug, Threaded	1	M10 X 1 X 13.5
5	3678925	YES	ADD	Seal, O Ring	1	M10
6	4989106	YES	ADD	Filter, Fuel	1	Purchase From Fleetguard
7	3969680	YES	ADD	Head, Fuel Filter	1	
8	3975396	YES	ADD	Adapter, Filter Head	1	
9	4937285	YES	ADD	Gasket, Filter	1	Buy From Cummins Filtration

FUEL FILTER PLUMBING

Electronic Parts Catalog - Option Detail				
Option	Group	Graphic	Film Card	Date
FF9573-05	06.04.1	ff971go	T	23-Jun-08
Engines	ISD4.5 CM2150, B5.9 LPG Plus CM556, G5.9, ISB 5.9 G CM2180, B4.5s, ISF3.8 CM2220 AN, ISB6.7 CM2250, B4.5 RGT, ISB CM800, QSB5.9-44 CM550, B5.9 G, G3.9, ISBe4 CM850, ISD6.7 CM2150, ISD6.7 CM2150 SN, QSB6.7 CM2250, QSB3.9-30 CM550, QSB5.9-30 CM550, B Gas Plus CM556, B6.7s, ISB CM2150, ISD4.5 CM2150 SN, ISB CM850, B LPG Plus CM556, B4.5, B3.9, ISF2.8 CM2220 AN, ISB6.7 CM2150 SN, QSB6.7 CM850, ISBe4 CM2150, G5.9 CM558, ISB6.7 CM2150 SQ, ISB4.5 CM2150 SN, ISB CM550, QSB5.9 CM850, B Gas International CM556, QSB4.5-30 CM550, ISBe CM800, ISBe5 CM2150 SN, QSB4.5 CM850, B5.9, ISBe CM850			

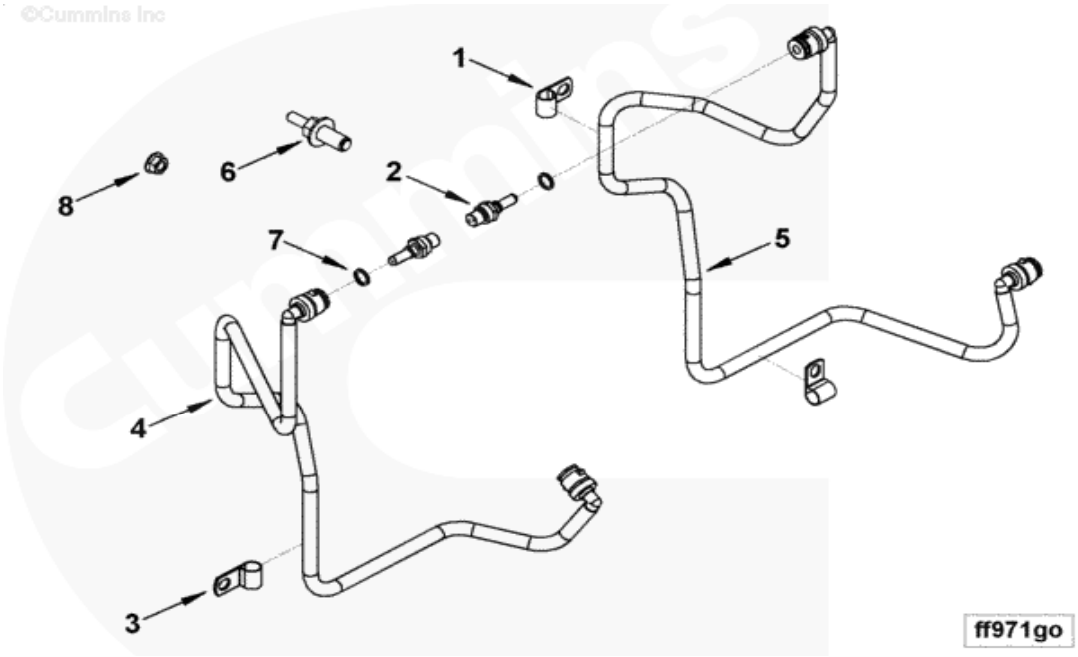

Ref No	Part Number	For-Sale	Shopping Cart	Part Name	Required	Remarks
	FF9573-05	NO		Fuel Filter Plumbing		Fuel Filter Plumbing
						Engine Family: "B" Series
						pump manufacturing/model:
						Bosch common rail
						Governor Type: Electronic
						Boost Control Provision:
						With mounting location: Fuel
						pump side - low mount fuel
						outlet banjo provided: N/A
						engine design phase: Tier 3
						Cylinders: 6 fuel plumbing:
						Quick connect santoprene
						coated tubes with SAE j2044
						connectors marine-grade fuel
						plumbing: No
1	3609967	YES	ADD	Clip	2	
2	3964337	YES	ADD	Connector, Quick Disconnect	2	
3	68152	YES	ADD	Clip	1	# 4
	4941584	YES	ADD	Tube, Fuel Supply	1	
4	4941582	YES	ADD	Tube, Fuel Supply	1	
5	4941583	YES	ADD	Tube, Fuel Supply	1	
6	3944061	YES	ADD	Screw, Hexagon Flange Head Cap	2	
7	4891385	YES	ADD	Washer, Sealing	2	
8	3900589	YES	ADD	Nut, Hexagon Flange	2	M8 X 1.25

FUEL PLUMBING

Electronic Parts Catalog - Option Detail				
Option	Group	Graphic	Film Card	Date
FT9113-05	06.03	ft962gy	T	12-Nov-07
Engines	ISD4.5 CM2150, B5.9 LPG Plus CM556, G5.9, ISB 5.9 G CM2180, B4.5s, ISF3.8 CM2220 AN, ISB6.7 CM2250, B4.5 RGT, ISB CM800, QSB5.9-44 CM550, B5.9 G, G3.9, ISBe4 CM850, ISD6.7 CM2150, ISD6.7 CM2150 SN, QSB6.7 CM2250, QSB3.9-30 CM550, QSB5.9-30 CM550, B Gas Plus CM556, B6.7s, ISB CM2150, ISD4.5 CM2150 SN, ISB CM850, B LPG Plus CM556, B4.5, B3.9, ISF2.8 CM2220 AN, ISB6.7 CM2150 SN, QSB6.7 CM850, ISBe4 CM2150, G5.9 CM558, ISB6.7 CM2150 SQ, ISB4.5 CM2150 SN, ISB CM550, QSB5.9 CM850, B Gas International CM556, QSB4.5-30 CM550, ISBe CM800, ISBe5 CM2150 SN, QSB4.5 CM850, B5.9, ISBe CM850			

©Cummins Inc

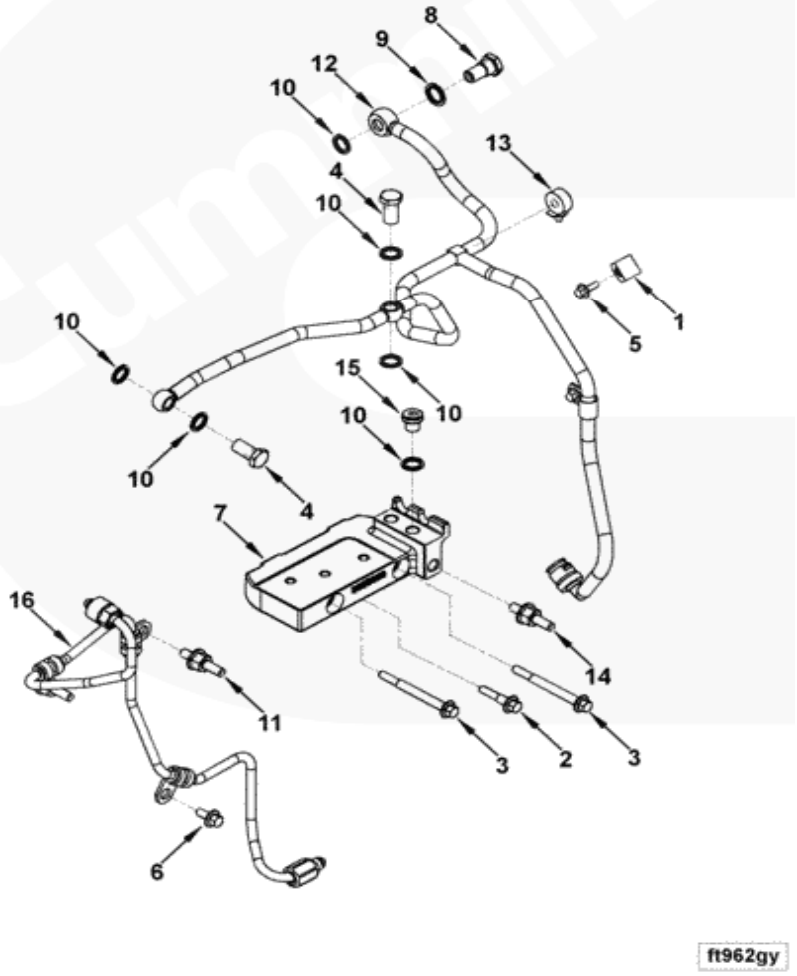

Ref No	Part Number	For-Sale	Shopping Cart	Part Name	Required	Remarks
	FT9113-05	NO		Fuel Plumbing		Fuel Plumbing
						Structure Code: Mr 03 EBM
						Engine Cylinders: 6 fitting
						type: N/A 4 fitting supplier:
						Customer orientation: N/A
						OEM Attachment: M12 X 1.5-6
						H Female
						OEM Drain Fitting Location:

						CL of engine (mm): 307.0
						CL of crank (mm): 373.0
						FFOB (mm): -532.0
						Cylinder head Fuel Drain
						Loc.: CL of engine (mm): 16.0
						CL of crank (mm): 391.5
						FFOB (mm): -756.5
						Common rail fuel Drain Loc.:
						CL of engine (mm): 216.0
						CL of crank (mm): 412.0
						FFOB (mm): -289.5
						Fuel pump Drain Loc.:
						CL of engine (mm): 291.5
						CL of crank (mm): 55.0
						FFOB (mm): -695.0
						ECM fuel Manifold Drain
						Port: CL of engine (mm): N/A
						CL of crank (mm): N/A
						FFOB (mm): N/A
						Unique Characteristics:
						For Use With Low mount pump.
1	68152	YES	ADD	Clip	2	# 4
2	3900632	YES	ADD	Screw, Hexagon Flange Head Cap	2	M8 X 1.25 X 35
3	3902112	YES	ADD	Screw, Hexagon Flange Head Cap	1	M8 X 1.25 X 80
4	3903035	YES	ADD	Screw, Banjo Connector	2	
5	3913638	YES	ADD	Screw, Hexagon Flange Head Cap	2	M6 X 1.00 X 16
6	3925883	YES	ADD	Screw, Hexagon Flange Head Cap	1	M8 X 1.25 X 16
7	3955080	YES	ADD	Connection, Fuel Block	1	
8	3957290	YES	ADD	Valve, Check	1	
9	3963988	YES	ADD	Washer, Sealing	1	
10	3963990	YES	ADD	Washer, Sealing	6	
11	3955171	YES	ADD	Coupling, Plain Hose	1	
12	3978505	YES	ADD	Tube, Fuel Drain	1	
13	4899743	YES	ADD	Clip	1	
14	4929065	YES	ADD	Stud	2	
15	4929619	YES	ADD	Plug, Threaded	1	
16	4940552	YES	ADD	Tube, Fuel Supply	1	

FUEL PUMP

Electronic Parts Catalog - Option Detail				
Option	Group	Graphic	Film Card	Date
FP90312	05.01	fp965gz	T	1-Apr-10
Engines	ISD4.5 CM2150, B5.9 LPG Plus CM556, G5.9, ISB 5.9 G CM2180, B4.5s, ISF3.8 CM2220 AN, ISB6.7 CM2250, B4.5 RGT, ISB CM800, QSB5.9-44 CM550, B5.9 G, G3.9, ISBe4 CM850, ISD6.7 CM2150, ISD6.7 CM2150 SN, QSB6.7 CM2250, QSB3.9-30 CM550, QSB5.9-30 CM550, B Gas Plus CM556, B6.7s, ISB CM2150, ISD4.5 CM2150 SN, ISB CM850, B LPG Plus CM556, B4.5, B3.9, ISF2.8 CM2220 AN, ISB6.7 CM2150 SN, QSB6.7 CM850, ISBe4 CM2150, G5.9 CM558, ISB6.7 CM2150 SQ, ISB4.5 CM2150 SN, ISB CM550, QSB5.9 CM850, B Gas International CM556, QSB4.5-30 CM550, ISBe CM800, ISBe5 CM2150 SN, QSB4.5 CM850, B5.9, ISBe CM850			

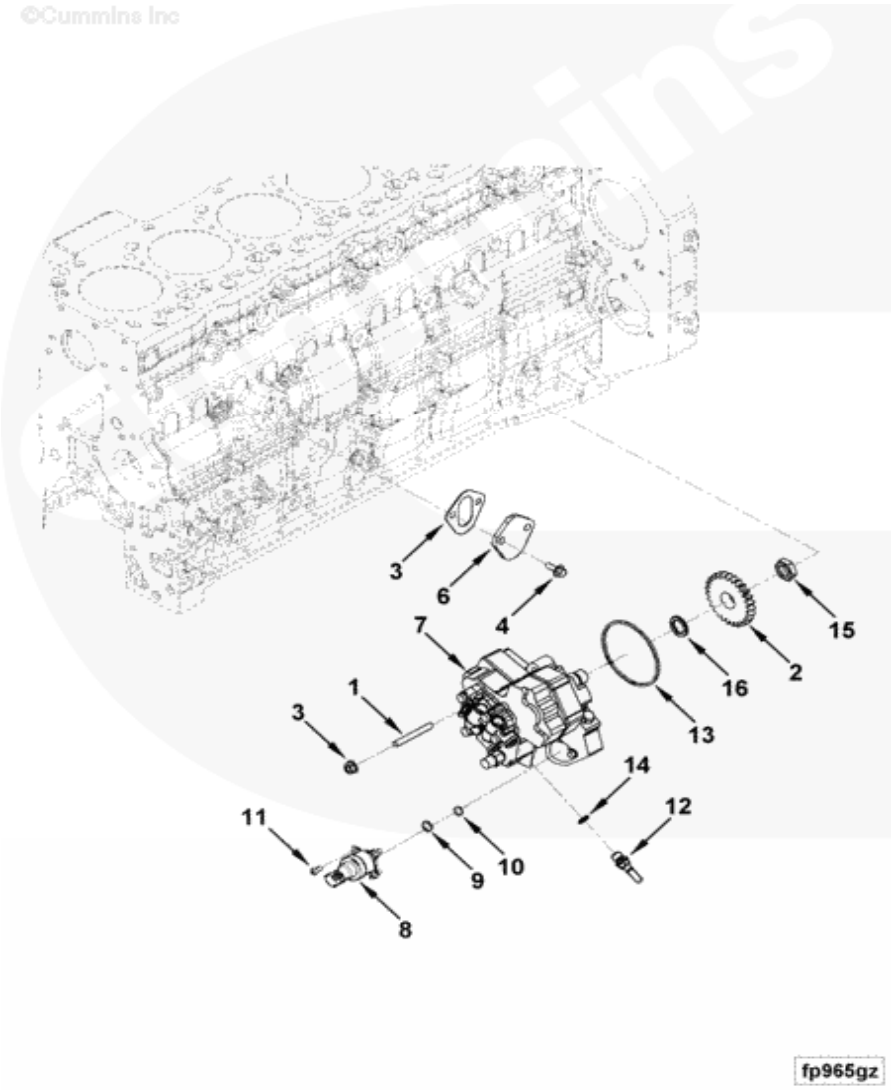

Ref No	Part Number	For-Sale	Shopping Cart	Part Name	Required	Remarks
	FP90312	NO		Fuel Pump		Fuel Pump
						Structure Code: Mr 03 BM
						fuel pump manufacturer/model:
						Bosch common rail pressure
						capability: 1600 BAR SAE
						flange type: SAE j626 aug 93
						non-standard type 2 pilot
						shaft diameter (mm): 80 fuel

						pump inlet: M12 x 1.5 fuel
						pump drain: SAE j2044
						Location: Low engine design
						phase: Tier 3
						DEP may substitute gear
						4893389 for 3955153.
1	3949419	YES	ADD	Stud	3	
2	3955153	YES	ADD	Gear, Fuel Pump	1	
3	3900589	YES	ADD	Nut, Hexagon Flange	3	M8 X 1.25
4	3900630	YES	ADD	Screw, Hexagon Flange Head Cap	2	M8 X 1.25 X 20
5	3939258	YES	ADD	Gasket, Cover Plate	1	
6	3948083	YES	ADD	Plate, Cover	1	
1	3949419	YES	ADD	Stud	3	
2	3955153	YES	ADD	Gear, Fuel Pump	1	
3	3900589	YES	ADD	Nut, Hexagon Flange	3	M8 X 1.25
4	3900630	YES	ADD	Screw, Hexagon Flange Head Cap	2	M8 X 1.25 X 20
5	3939258	YES	ADD	Gasket, Cover Plate	1	
6	3948083	YES	ADD	Plate, Cover	1	
	5256607	NO		Pump, Fuel	1	Recon Equivalent 5256607 NX
7	5256608	YES	ADD	Pump, Fuel	1	
8	5257595	YES	ADD	Actuator, Etr Fuel Control	1	
9	3947269	YES	ADD	Seal, O Ring	1	
10	3947270	YES	ADD	Seal, O Ring	1	
11	4932790	YES	ADD	Screw, Socket Head Cap	3	
12	3974765	YES	ADD	Connector, Quick Disconnect	4	
13	2830977	YES	ADD	Seal, O Ring	1	
14	4891385	YES	ADD	Washer, Sealing	4	
15	4890634	YES	ADD	Nut, Regular Hexagon	1	
16	4890635	YES	ADD	Washer, Spring	1	

FULL FLOW OIL FILTER

Electronic Parts Catalog - Option Detail				
Option	Group	Graphic	Film Card	Date
LF9068-03	07.03	lf950gg	T	26-Apr-02
Engines	ISD4.5 CM2150, B5.9 LPG Plus CM556, G5.9, ISB 5.9 G CM2180, B4.5s, ISF3.8 CM2220 AN, ISB6.7 CM2250, B4.5 RGT, ISB CM800, QSB5.9-44 CM550, B5.9 G, G3.9, ISBe4 CM850, ISD6.7 CM2150, ISD6.7 CM2150 SN, QSB6.7 CM2250, QSB3.9-30 CM550, QSB5.9-30 CM550, B Gas Plus CM556, B6.7s, ISB CM2150, ISD4.5 CM2150 SN, ISB CM850, B LPG Plus CM556, B4.5, B3.9, ISF2.8 CM2220 AN, ISB6.7 CM2150 SN, QSB6.7 CM850, ISBe4 CM2150, G5.9 CM558, ISB6.7 CM2150 SQ, ISB4.5 CM2150 SN, ISB CM550, QSB5.9 CM850, B Gas International CM556, QSB4.5-30 CM550, ISBe CM800, ISBe5 CM2150 SN, QSB4.5 CM850, B5.9, ISBe CM850			

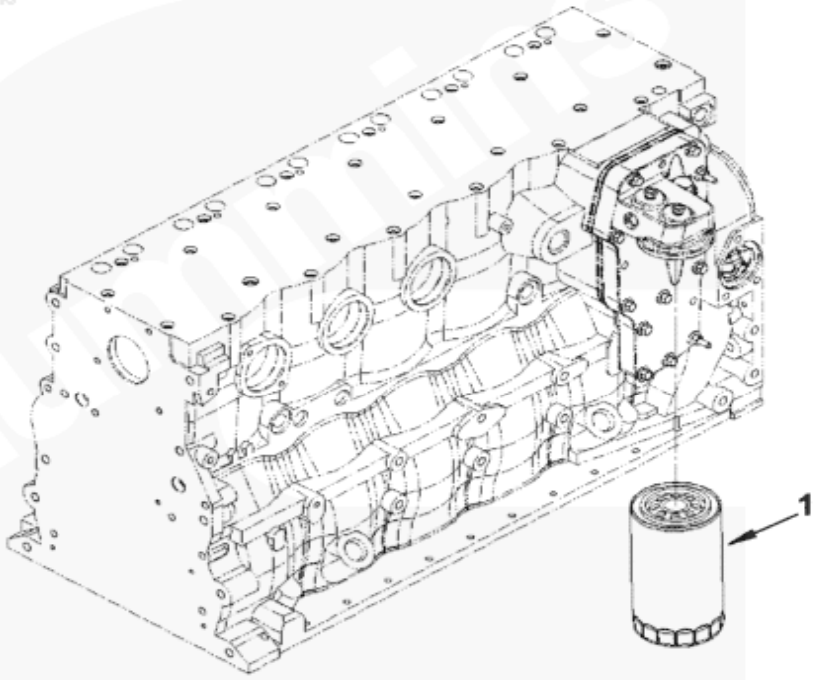

Ref No	Part Number	For-Sale	Shopping Cart	Part Name	Required	Remarks
	LF9068-03	NO		Full Flow Oil Filter		Full Flow Oil Filter
						Engine Cylinders: 4 And 6
						Oil Filter Location: On
						Engine from centerline of
						crank: -12 from centerline of
						engine: -228 from front face
						of block: -137
						Oil Filter Supplier: Cummins
						Oil Filter Type: Full Flow
						decal provided: No filter
						length (mm): 175.01 removal
						distance (mm): 23 mounting
						thread size: M27 x2.
1	4897898	YES	ADD	Cartridge, Lub Oil Filter	1	Purchase From Fleetguard

INJECTOR

Electronic Parts Catalog - Option Detail				
Option	Group	Graphic	Film Card	Date
PP40426	06.01	pp968gk	T	15-Sep-10
Engines	ISD4.5 CM2150, B5.9 LPG Plus CM556, G5.9, ISB 5.9 G CM2180, B4.5s, ISF3.8 CM2220 AN, ISB6.7 CM2250, B4.5 RGT, ISB CM800, QSB5.9-44 CM550, B5.9 G, G3.9, ISBe4 CM850, ISD6.7 CM2150, ISD6.7 CM2150 SN, QSB6.7 CM2250, QSB3.9-30 CM550, QSB5.9-30 CM550, B Gas Plus CM556, B6.7s, ISB CM2150, ISD4.5 CM2150 SN, ISB CM850, B LPG Plus CM556, B4.5, B3.9, ISF2.8 CM2220 AN, ISB6.7 CM2150 SN, QSB6.7 CM850, ISBe4 CM2150, G5.9 CM558, ISB6.7 CM2150 SQ, ISB4.5 CM2150 SN, ISB CM550, QSB5.9 CM850, B Gas International CM556, QSB4.5-30 CM550, ISBe CM800, ISBe5 CM2150 SN, QSB4.5 CM850, B5.9, ISBe CM850			

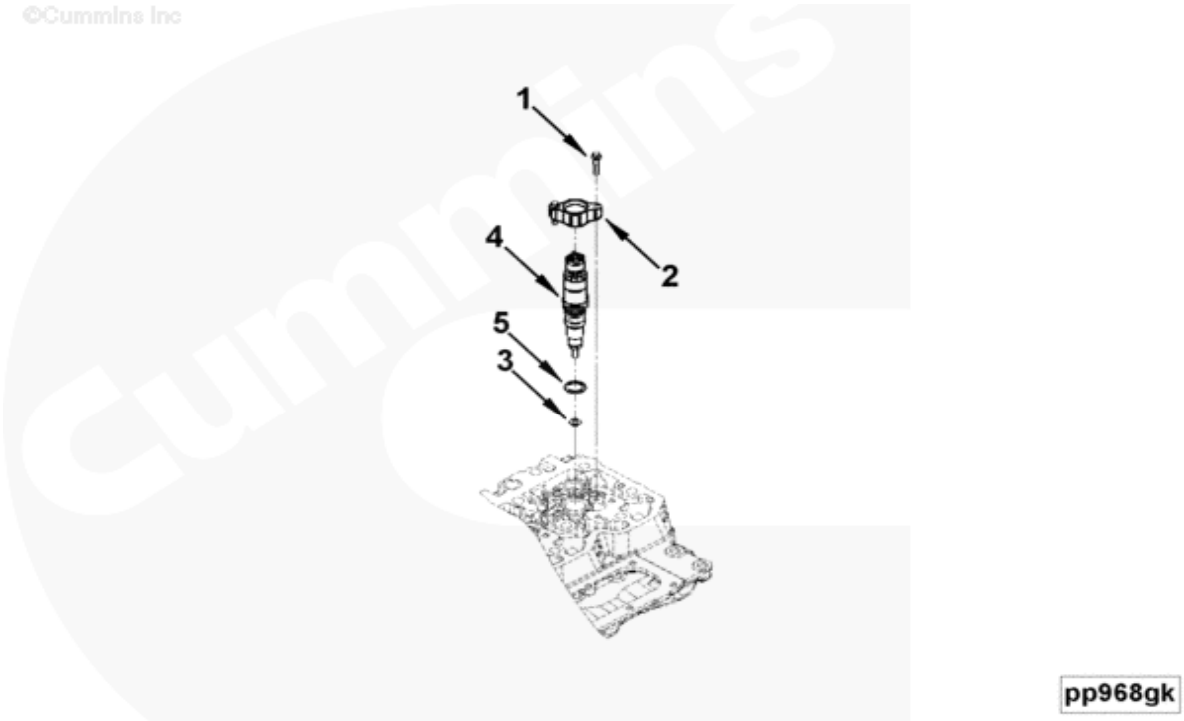

Ref No	Part Number	For-Sale	Shopping Cart	Part Name	Required	Remarks
	PP40426	NO		Injector		Injector
1	3900628	YES	ADD	Screw, Hexagon Flange Head Cap	12	M6 X 1.00 X 30
2	3976370	YES	ADD	Clamp, Injector	6	
4	5263262	NO		Injector	6	Recon Equivalent 5263262 NX
3	3976371	YES	ADD	Seal, Injector	1	
5	3977393	YES	ADD	Seal, O Ring	1	

INJECTOR PLUMBING

Electronic Parts Catalog - Option Detail				
Option	Group	Graphic	Film Card	Date
PP40426	06.01.2	pp961gy	T	15-Sep-10
Engines	ISD4.5 CM2150, B5.9 LPG Plus CM556, G5.9, ISB 5.9 G CM2180, B4.5s, ISF3.8 CM2220 AN, ISB6.7 CM2250, B4.5 RGT, ISB CM800, QSB5.9-44 CM550, B5.9 G, G3.9, ISBe4 CM850, ISD6.7 CM2150, ISD6.7 CM2150 SN, QSB6.7 CM2250, QSB3.9-30 CM550, QSB5.9-30 CM550, B Gas Plus CM556, B6.7s, ISB CM2150, ISD4.5 CM2150 SN, ISB CM850, B LPG Plus CM556, B4.5, B3.9, ISF2.8 CM2220 AN, ISB6.7 CM2150 SN, QSB6.7 CM850, ISBe4 CM2150, G5.9 CM558, ISB6.7 CM2150 SQ, ISB4.5 CM2150 SN, ISB CM550, QSB5.9 CM850, B Gas International CM556, QSB4.5-30 CM550, ISBe CM800, ISBe5 CM2150 SN, QSB4.5 CM850, B5.9, ISBe CM850			

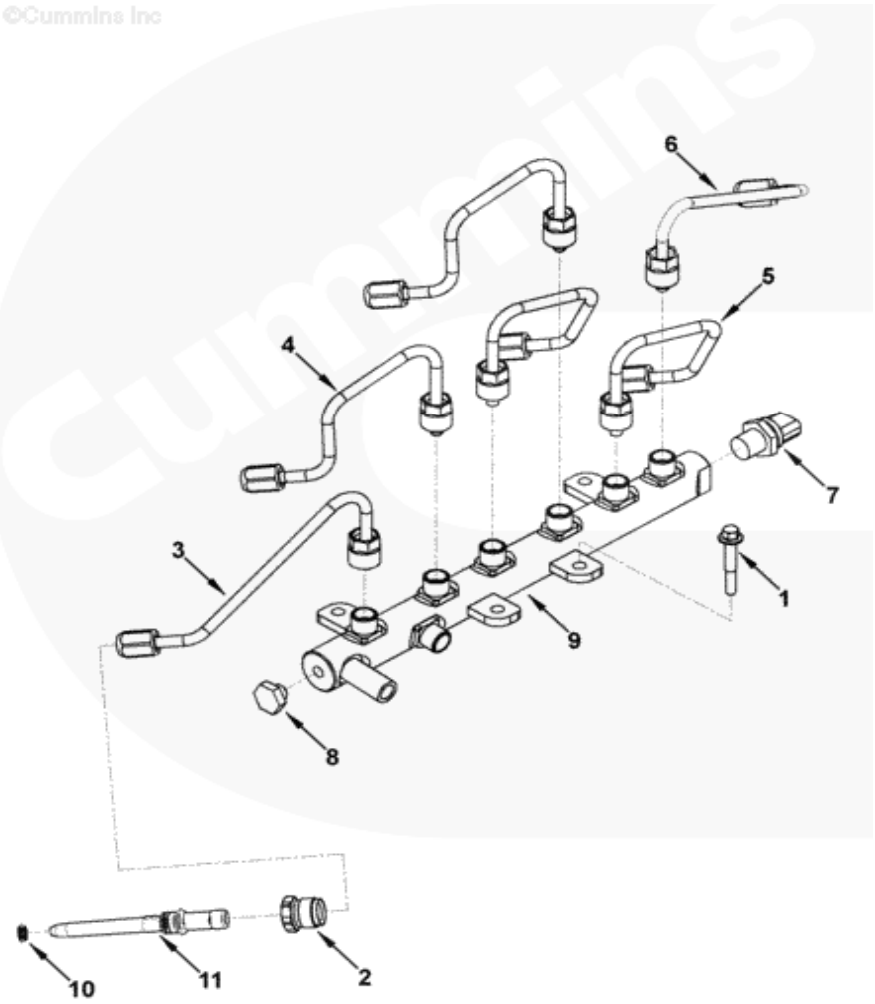

Ref No	Part Number	For-Sale	Shopping Cart	Part Name	Required	Remarks
	PP40426	NO		Injector Plumbing		Injector Plumbing
1	3930837	YES	ADD	Screw, Hexagon Flange Head Cap	4	
2	5264181	YES	ADD	Retainer, Inj Ful Sup Cnr	6	
3	3978031	YES	ADD	Tube, Injector Fuel Supply	1	#1 Cylinder
4	3978032	YES	ADD	Tube, Injector Fuel Supply	2	#2 and #3 Cylinder
5	3978034	YES	ADD	Tube, Injector Fuel Supply	2	#4 and #5 Cylinder
6	3978036	YES	ADD	Tube, Injector Fuel Supply	1	#6 Cylinder

	3977530	YES	ADD	Manifold, Fuel	1	
7	5260246	YES	ADD	Sensor, Pressure	1	Fuel
8	3974093	YES	ADD	Valve, Pressure Relief	1	
9	3978448	NO		Manifold, Fuel	1	
	4929864	YES	ADD	Connector, Inj Fuel Supply	6	
10	3972753	NO		Seal, O Ring	1	
11	4929865	NO		Connector, Inj Fuel Supply	1	

LEVER,ROCKER

Electronic Parts Catalog - Option Detail				
Option	Group	Graphic	Film Card	Date
RL9765-01	03.01	rl940gk	T	27-Feb-07
Engines	ISD4.5 CM2150, B5.9 LPG Plus CM556, G5.9, ISB 5.9 G CM2180, B4.5s, ISF3.8 CM2220 AN, ISB6.7 CM2250, B4.5 RGT, ISB CM800, QSB5.9-44 CM550, B5.9 G, G3.9, ISBe4 CM850, ISD6.7 CM2150, ISD6.7 CM2150 SN, QSB6.7 CM2250, QSB3.9-30 CM550, QSB5.9-30 CM550, B Gas Plus CM556, B6.7s, ISB CM2150, ISD4.5 CM2150 SN, ISB CM850, B LPG Plus CM556, B4.5, B3.9, ISF2.8 CM2220 AN, ISB6.7 CM2150 SN, QSB6.7 CM850, ISBe4 CM2150, G5.9 CM558, ISB6.7 CM2150 SQ, ISB4.5 CM2150 SN, ISB CM550, QSB5.9 CM850, B Gas International CM556, QSB4.5-30 CM550, ISBe CM800, ISBe5 CM2150 SN, QSB4.5 CM850, B5.9, ISBe CM850			

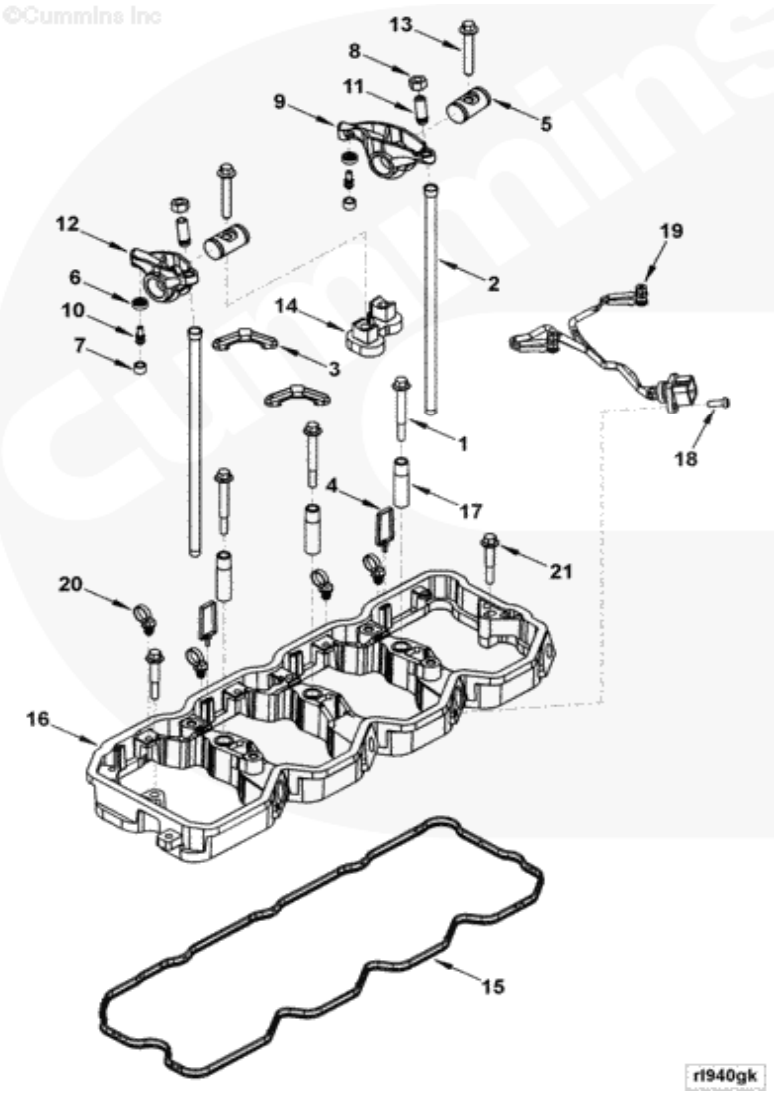

Ref No	Part Number	For-Sale	Shopping Cart	Part Name	Required	Remarks
	RL9765-01	NO		Rocker Lever		Rocker Lever
						Structure Code: 03 EBM
						engine design: Tier3
						Engine Family: "B" Series
						Cylinders: 6 compression
						brake compatible: No
						pressure diameter cast rocker
						housing with

						Additional mounting holes.
1	3903096	YES	ADD	Screw, Hexagon Flange Head Cap	5	M8 X 1.25 X 70
2	3941253	YES	ADD	Rod, Push	12	
3	3943626	YES	ADD	Crosshead, Valve	12	
4	4890404	YES	ADD	Clip, Wire Retaining	3	
	4928698	YES	ADD	Assembly, Rocker Lever	6	
5	4928699	YES	ADD	Shaft, Rocker Lever	2	
	3937219	YES	ADD	Lever, Rocker	1	
6	3935945	NO		Retainer, Socket	1	
7	3935946	NO		Socket, Rocker Lever	1	
	3942735	NO		Lever, Rocker	1	
8	3927692	YES	ADD	Nut, Heavy Hexagon	1	
9	3941928	YES	ADD	Lever, Rocker	1	Exhaust
10	3942730	NO		Ball, Rocker Lever	1	
11	3959128	YES	ADD	Screw, Rocker Lever Adjusting	1	
	3937220	YES	ADD	Lever, Rocker	1	
6	3935945	NO		Retainer, Socket	1	
7	3935946	NO		Socket, Rocker Lever	1	
	3942734	NO		Lever, Rocker	1	
8	3927692	YES	ADD	Nut, Heavy Hexagon	1	
10	3942730	NO		Ball, Rocker Lever	1	
11	3959128	YES	ADD	Screw, Rocker Lever Adjusting	1	
12	3941927	NO		Lever, Rocker	1	Intake
13	3990127	YES	ADD	Screw, Hexagon Flange Head Cap	2	
14	3964908	YES	ADD	Support, Rocker Lever	1	
	4934573	YES	ADD	Housing, Rocker Lever	1	
15	4899231	YES	ADD	Gasket, Rkr Lever Housing	1	
	4899257	YES	ADD	Housing, Rocker Lever	1	
16	4899235	NO		Housing, Rocker Lever	1	
17	4899245	NO		Sleeve	5	
18	3913638	YES	ADD	Screw, Hexagon Flange Head Cap	3	M6 X 1.00 X 16
19	3287699	YES	ADD	Harness, Wiring	3	
20	3287727	YES	ADD	Clip, Wire Retaining	6	
21	3900633	YES	ADD	Screw, Hexagon Flange Head Cap	2	M8 X 1.25 X 50

LIFTING ARRANGEMENT

Electronic Parts Catalog - Option Detail				
Option	Group	Graphic	Film Card	Date
LA9145	17.06	la952gj	T	5-Dec-05
Engines	ISD4.5 CM2150, B5.9 LPG Plus CM556, G5.9, ISB 5.9 G CM2180, B4.5s, ISF3.8 CM2220 AN, ISB6.7 CM2250, B4.5 RGT, ISB CM800, QSB5.9-44 CM550, B5.9 G, G3.9, ISBe4 CM850, ISD6.7 CM2150, ISD6.7 CM2150 SN, QSB6.7 CM2250, QSB3.9-30 CM550, QSB5.9-30 CM550, B Gas Plus CM556, B6.7s, ISB CM2150, ISD4.5 CM2150 SN, ISB CM850, B LPG Plus CM556, B4.5, B3.9, ISF2.8 CM2220 AN, ISB6.7 CM2150 SN, QSB6.7 CM850, ISBe4 CM2150, G5.9 CM558, ISB6.7 CM2150 SQ, ISB4.5 CM2150 SN, ISB CM550, QSB5.9 CM850, B Gas International CM556, QSB4.5-30 CM550, ISBe CM800, ISBe5 CM2150 SN, QSB4.5 CM850, B5.9, ISBe CM850			

©Cummins Inc

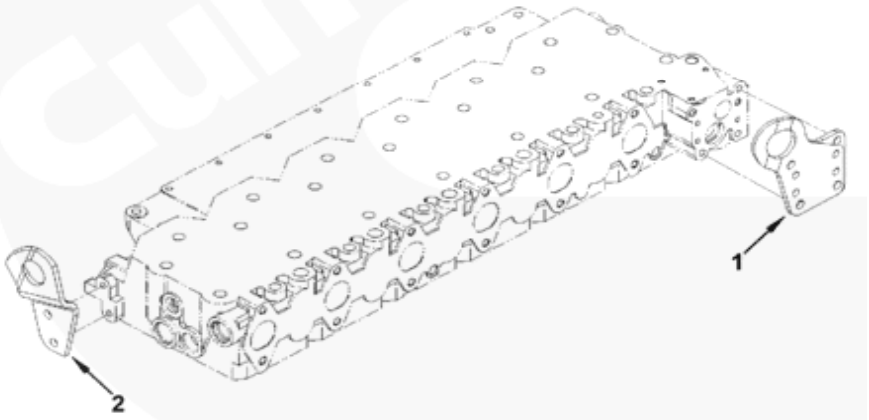

la952gj

Ref No	Part Number	For-Sale	Shopping Cart	Part Name	Required	Remarks
	LA9145	NO		Lifting Arrangement		Lifting Arrangement
						Engine Family: "B" Series max
						lifting load(lbs): 3145
						bracket(s) provided:
						Front and rear accommodates
						pad mount alternator bracket:
						Y accommodates spool, hinge
						and customer supplied mount

						alternator bracket: Y this
						bracket is designed for
						engine mounting on tier3 6B
						engines.
						Maximum allowable load for a
						single bracket is 2450 lbs.
						front bracket eyelet
						coordinates as viewed from
						the front, using front face
						of block and centerline of
						crank: X = -144.35; y =
						455.73; z = 78.00 rear
						bracket eyelet coordinates as
						viewed from the front, using
						front face of block and
						centerline of crank: X = -
						123.75; y = 444.45; z =
						785.58.
1	4894100	YES	ADD	Bracket, Lifting	1	
2	4933232	YES	ADD	Bracket, Lifting	1	

LIFTING BRACKET MOUNTING

Electronic Parts Catalog - Option Detail				
Option	Group	Graphic	Film Card	Date
LA9147	17.06	la951gz	T	5-Dec-05
Engines	ISD4.5 CM2150, B5.9 LPG Plus CM556, G5.9, ISB 5.9 G CM2180, B4.5s, ISF3.8 CM2220 AN, ISB6.7 CM2250, B4.5 RGT, ISB CM800, QSB5.9-44 CM550, B5.9 G, G3.9, ISBe4 CM850, ISD6.7 CM2150, ISD6.7 CM2150 SN, QSB6.7 CM2250, QSB3.9-30 CM550, QSB5.9-30 CM550, B Gas Plus CM556, B6.7s, ISB CM2150, ISD4.5 CM2150 SN, ISB CM850, B LPG Plus CM556, B4.5, B3.9, ISF2.8 CM2220 AN, ISB6.7 CM2150 SN, QSB6.7 CM850, ISBe4 CM2150, G5.9 CM558, ISB6.7 CM2150 SQ, ISB4.5 CM2150 SN, ISB CM550, QSB5.9 CM850, B Gas International CM556, QSB4.5-30 CM550, ISBe CM800, ISBe5 CM2150 SN, QSB4.5 CM850, B5.9, ISBe CM850			

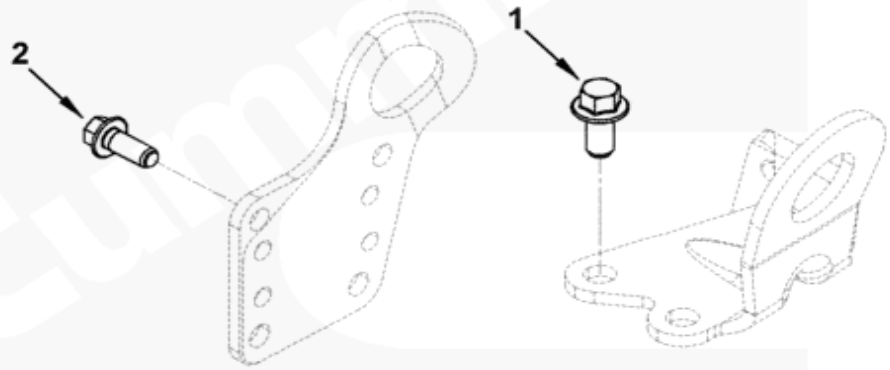

la951gz

Ref No	Part Number	For-Sale	Shopping Cart	Part Name	Required	Remarks
	LA9147	NO		Lifting Bracket Mounting		Lifting Bracket Mounting
						Engine Family: "B" Series
						rear bracket capscrew
						diameter: M12 rear bracket
						capscrew length: 25 rear
						bracket capscrew quantity: 2
						front bracket capscrew
						diameter: M10 front bracket
						capscrew length: 25
						accommodates spool, hinge and
						customer supplied mount
						alternator bracket.
1	3903990	YES	ADD	Screw, Hexagon Flange Head Cap	2	M10 X 1.50 X 20
2	3902460	YES	ADD	Screw, Hexagon Flange Head Cap	4	M10 X 1.50 X 25

LOCATION,DRAIN

Electronic Parts Catalog - Option Detail				
Option	Group	Graphic	Film Card	Date
DL9224-01	06.07	dl951gy	T	5-Mar-07
Engines	ISD4.5 CM2150, B5.9 LPG Plus CM556, G5.9, ISB 5.9 G CM2180, B4.5s, ISF3.8 CM2220 AN, ISB6.7 CM2250, B4.5 RGT, ISB CM800, QSB5.9-44 CM550, B5.9 G, G3.9, ISBe4 CM850, ISD6.7 CM2150, ISD6.7 CM2150 SN, QSB6.7 CM2250, QSB3.9-30 CM550, QSB5.9-30 CM550, B Gas Plus CM556, B6.7s, ISB CM2150, ISD4.5 CM2150 SN, ISB CM850, B LPG Plus CM556, B4.5, B3.9, ISF2.8 CM2220 AN, ISB6.7 CM2150 SN, QSB6.7 CM850, ISBe4 CM2150, G5.9 CM558, ISB6.7 CM2150 SQ, ISB4.5 CM2150 SN, ISB CM550, QSB5.9 CM850, B Gas International CM556, QSB4.5-30 CM550, ISBe CM800, ISBe5 CM2150 SN, QSB4.5 CM850, B5.9, ISBe CM850			

©Cummins Inc

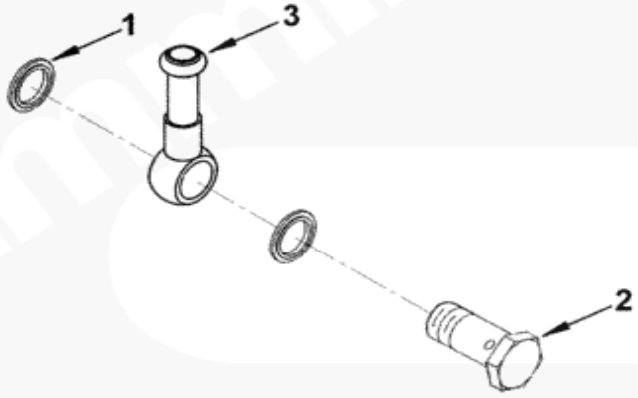

dl951gy

Ref No	Part Number	For-Sale	Shopping Cart	Part Name	Required	Remarks
	DL9224-01	NO		LOCATION,DRAIN		Mr - drain location
						cust interface: 10mm push on
						hose - single bead location
						from fob and centerline of
						crank(mm): X = 335.0 y =
						373.0 z = -565.0 engine
						design phase: Echo
						Engine Cylinders: 6
						Engine Family: "B" Series
						Unique Characteristics: 10mm
						push-on banjo fitting
						supplied in kit 8mm quick-
						disconnect fitting per SAE
						j2044 supplied with engine.
1	3963990	YES	ADD	Washer, Sealing	2	
2	3957770	YES	ADD	Screw, Banjo Connector	1	
3	4929149	YES	ADD	Connector, Banjo	1	

LUBRICATING OIL

Electronic Parts Catalog - Option Detail				
Option	Group	Graphic	Film Card	Date
LO9701	07.01.3	lo951ga	T	26-Jul-02
Engines	ISD4.5 CM2150, B5.9 LPG Plus CM556, G5.9, ISB 5.9 G CM2180, B4.5s, ISF3.8 CM2220 AN, ISB6.7 CM2250, B4.5 RGT, ISB CM800, QSB5.9-44 CM550, B5.9 G, G3.9, ISBe4 CM850, ISD6.7 CM2150, ISD6.7 CM2150 SN, QSB6.7 CM2250, QSB3.9-30 CM550, QSB5.9-30 CM550, B Gas Plus CM556, B6.7s, ISB CM2150, ISD4.5 CM2150 SN, ISB CM850, B LPG Plus CM556, B4.5, B3.9, ISF2.8 CM2220 AN, ISB6.7 CM2150 SN, QSB6.7 CM850, ISBe4 CM2150, G5.9 CM558, ISB6.7 CM2150 SQ, ISB4.5 CM2150 SN, ISB CM550, QSB5.9 CM850, B Gas International CM556, QSB4.5-30 CM550, ISBe CM800, ISBe5 CM2150 SN, QSB4.5 CM850, B5.9, ISBe CM850			

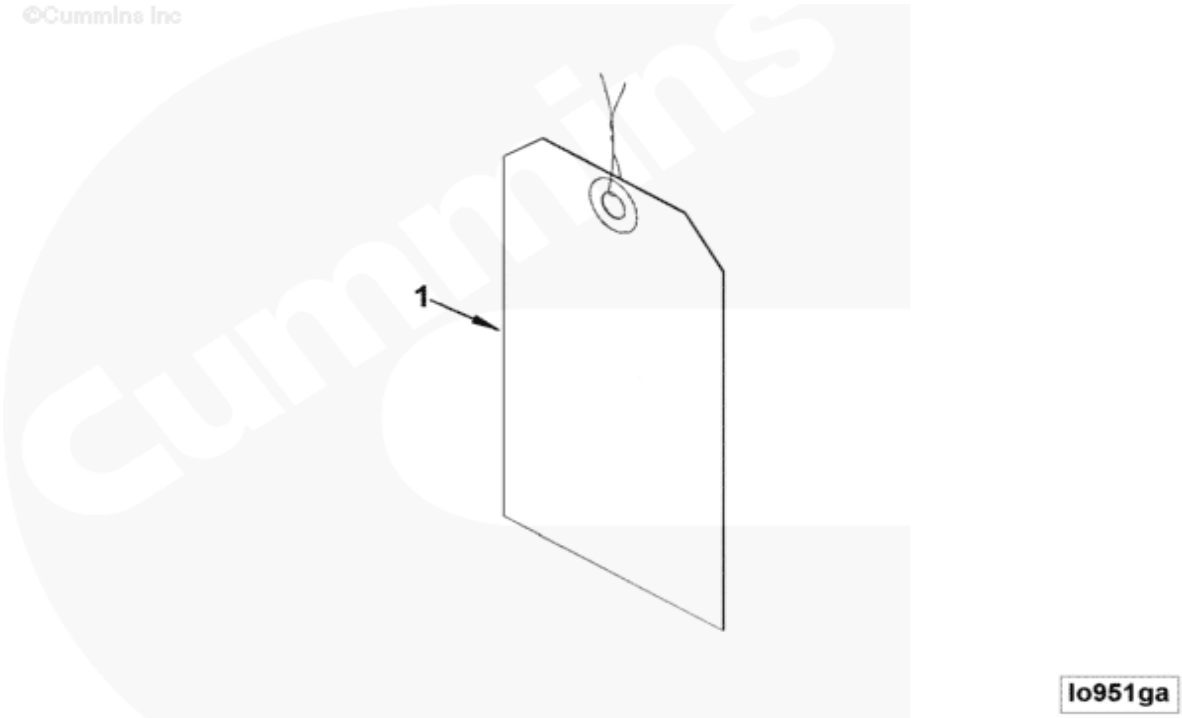

Ref No	Part Number	For-Sale	Shopping Cart	Part Name	Required	Remarks
	LO9701	NO		Lubricating Oil		Lubricating Oil
						Tag Identification: No Oil
						Tag Location: Front Lifting
						Bracket
						Varient Content:
						DCEC May use 4931584 and
						4945477 in Place of 3967353.
						Decal 4945477 Adhere to the
						Front Valve Cover.
	3967353	NO		Tag, Instruction	1	

LUBRICATING OIL PUMP

Electronic Parts Catalog - Option Detail				
Option	Group	Graphic	Film Card	Date
LP9065	07.06	lp950gf	T	16-Apr-10
Engines	ISD4.5 CM2150, B5.9 LPG Plus CM556, G5.9, ISB 5.9 G CM2180, B4.5s, ISF3.8 CM2220 AN, ISB6.7 CM2250, B4.5 RGT, ISB CM800, QSB5.9-44 CM550, B5.9 G, G3.9, ISBe4 CM850, ISD6.7 CM2150, ISD6.7 CM2150 SN, QSB6.7 CM2250, QSB3.9-30 CM550, QSB5.9-30 CM550, B Gas Plus CM556, B6.7s, ISB CM2150, ISD4.5 CM2150 SN, ISB CM850, B LPG Plus CM556, B4.5, B3.9, ISF2.8 CM2220 AN, ISB6.7 CM2150 SN, QSB6.7 CM850, ISBe4 CM2150, G5.9 CM558, ISB6.7 CM2150 SQ, ISB4.5 CM2150 SN, ISB CM550, QSB5.9 CM850, B Gas International CM556, QSB4.5-30 CM550, ISBe CM800, ISBe5 CM2150 SN, QSB4.5 CM850, B5.9, ISBe CM850			

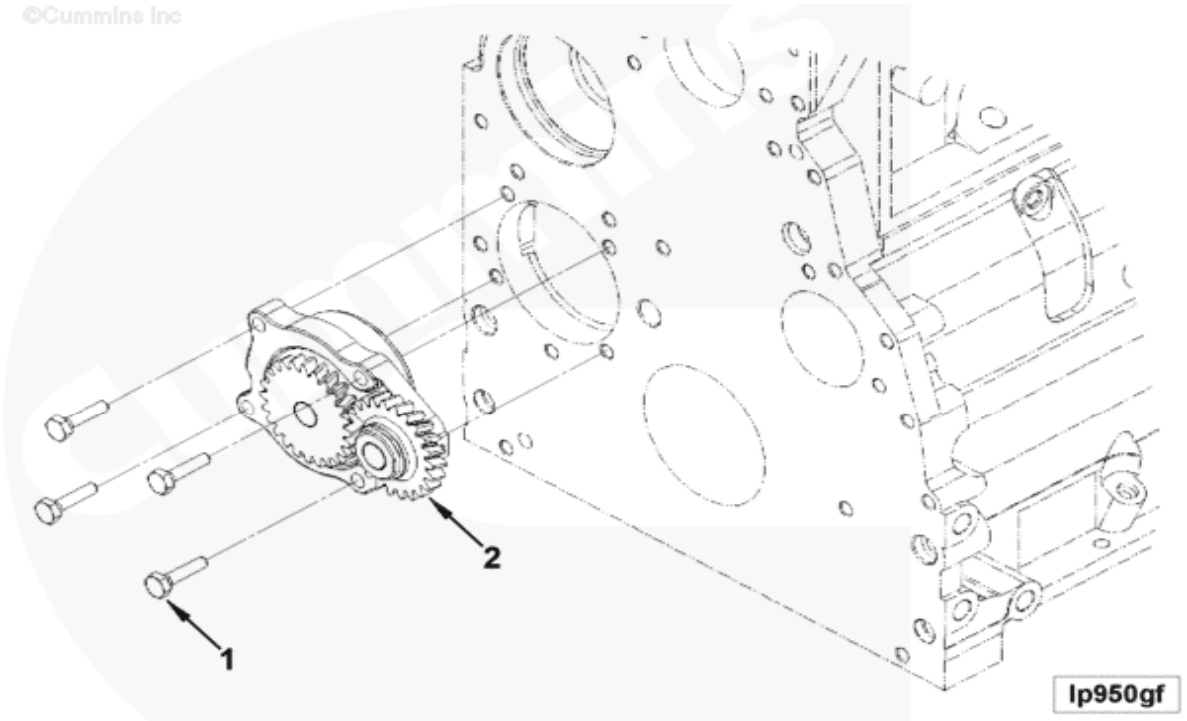

Ref No	Part Number	For-Sale	Shopping Cart	Part Name	Required	Remarks
	LP9065	NO		Lubricating Oil Pump		Lubricating Oil Pump
						pump drive: Non crank
						concentric max HP: 305 body
						material: Cast iron flow
						rate at pump speed (GPM at
						RPM): 3.2 at 750 gear type:
						Steel HCR gear piston cooling
						method: Saddle or j-jet
						Engine Cylinders: 6
						Engine Aspiration: Charge
						Air Cooled block oil pump
						cavity (mm): 21.2 CDC may
						use lub oil pump 3971544 in
						place of lub oil pump 4939588
1	3900677	YES	ADD	Screw, Hexagon Head Cap	4	M8 X 1.25 X 30
2	4939588	YES	ADD	Pump, Lubricating Oil	1	

OIL FILLER ARRANGEMENT

Electronic Parts Catalog - Option Detail				
Option	Group	Graphic	Film Card	Date
OB9169-03	07.02	ob901zb	T	21-Aug-01
Engines	ISD4.5 CM2150, B5.9 LPG Plus CM556, G5.9, ISB 5.9 G CM2180, B4.5s, ISF3.8 CM2220 AN, ISB6.7 CM2250, B4.5 RGT, ISB CM800, QSB5.9-44 CM550, B5.9 G, G3.9, ISBe4 CM850, ISD6.7 CM2150, ISD6.7 CM2150 SN, QSB6.7 CM2250, QSB3.9-30 CM550, QSB5.9-30 CM550, B Gas Plus CM556, B6.7s, ISB CM2150, ISD4.5 CM2150 SN, ISB CM850, B LPG Plus CM556, B4.5, B3.9, ISF2.8 CM2220 AN, ISB6.7 CM2150 SN, QSB6.7 CM850, ISBe4 CM2150, G5.9 CM558, ISB6.7 CM2150 SQ, ISB4.5 CM2150 SN, ISB CM550, QSB5.9 CM850, B Gas International CM556, QSB4.5-30 CM550, ISBe CM800, ISBe5 CM2150 SN, QSB4.5 CM850, B5.9, ISBe CM850			

©Cummins Inc

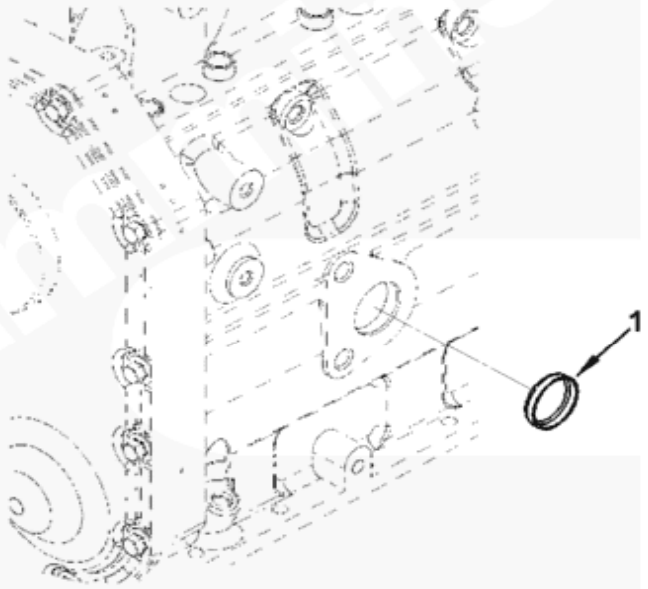

ob901zb

Ref No	Part Number	For-Sale	Shopping Cart	Part Name	Required	Remarks
	OB9169-03	NO		Oil Filler Arrangement		Oil Filler Arrangement
						Engine Family: "B" Series
						fill tube supplier: No fill
						provided in block.
						Functional w/dual power
						ratings: Yes
						Restricted Breather Type:
						None
						Fuel Type: Diesel drain
						provision for 50 DN
						alternator: No
						Engine Aspiration: Charge
						Air Cooled engine cylinder
						count: 6
						Fill Location: Valve Cover.
1	3900958	YES	ADD	Plug, Expansion	1	

OIL LEVEL GAUGE

Electronic Parts Catalog - Option Detail				
Option	Group	Graphic	Film Card	Date
LG90113	07.02	lg955gp	T	3-Aug-04
Engines	ISD4.5 CM2150, B5.9 LPG Plus CM556, G5.9, ISB 5.9 G CM2180, B4.5s, ISF3.8 CM2220 AN, ISB6.7 CM2250, B4.5 RGT, ISB CM800, QSB5.9-44 CM550, B5.9 G, G3.9, ISBe4 CM850, ISD6.7 CM2150, ISD6.7 CM2150 SN, QSB6.7 CM2250, QSB3.9-30 CM550, QSB5.9-30 CM550, B Gas Plus CM556, B6.7s, ISB CM2150, ISD4.5 CM2150 SN, ISB CM850, B LPG Plus CM556, B4.5, B3.9, ISF2.8 CM2220 AN, ISB6.7 CM2150 SN, QSB6.7 CM850, ISBe4 CM2150, G5.9 CM558, ISB6.7 CM2150 SQ, ISB4.5 CM2150 SN, ISB CM550, QSB5.9 CM850, B Gas International CM556, QSB4.5-30 CM550, ISBe CM800, ISBe5 CM2150 SN, QSB4.5 CM850, B5.9, ISBe CM850			

©Cummins Inc

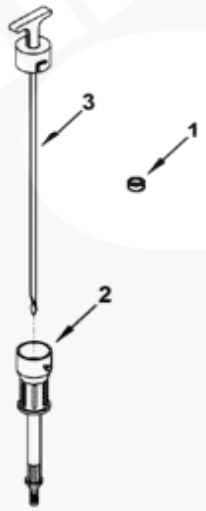

lg955gp

Ref No	Part Number	For-Sale	Shopping Cart	Part Name	Required	Remarks
	LG90113	NO		Oil Level Gauge		Oil Level Gauge
						Engine Family: B
						Engine Cylinders: 6
						Oil Pan Sump Type: Standard
						Front/rear
						Dipstick Supplier: Cummins
						Dipstick Tube Supplier:
						Cummins

						Dipstick Location: Fuel Pump
						Side tube entry location from
						front face of block(mm): 352
						Dipstick Style: Locking ,
						Free Hanging
						Dipstick Pull Location: Fuel
						Pump Side from engine
						centerline: N/A from crank
						centerline: N/A from front
						face of block centerline:
						N/A
						Dipstick Brace Attachment
						Location: N/A from engine
						centerline: N/A from crank
						centerline: N/A from front
						face of block centerline:
						N/A
						Oil Level High / Low (qt):
						15/13
						Dipstick Calibration: Bfob -
						full / low (mm): 49.7/59.7
						Power Angle (deg): 0
						Tilt Angle (deg): 0
						effective tube length (mm):
						1200 tube bend angle (deg):
						N/A handle color: Yellow
						wire tie to engine for
						shipment.
1	3905368	NO		Plug, Expansion	4	Replace With 3900955
	3976989	YES	ADD	Dipstick	1	
2	3974256	YES	ADD	Tube, Oil Gauge	1	
3	3976990	YES	ADD	Dipstick	1	

OIL PAN

Electronic Parts Catalog - Option Detail				
Option	Group	Graphic	Film Card	Date
OP9315-05	07.01	op953zb	T	2-Sep-08
Engines	ISD4.5 CM2150, B5.9 LPG Plus CM556, G5.9, ISB 5.9 G CM2180, B4.5s, ISF3.8 CM2220 AN, ISB6.7 CM2250, B4.5 RGT, ISB CM800, QSB5.9-44 CM550, B5.9 G, G3.9, ISBe4 CM850, ISD6.7 CM2150, ISD6.7 CM2150 SN, QSB6.7 CM2250, QSB3.9-30 CM550, QSB5.9-30 CM550, B Gas Plus CM556, B6.7s, ISB CM2150, ISD4.5 CM2150 SN, ISB CM850, B LPG Plus CM556, B4.5, B3.9, ISF2.8 CM2220 AN, ISB6.7 CM2150 SN, QSB6.7 CM850, ISBe4 CM2150, G5.9 CM558, ISB6.7 CM2150 SQ, ISB4.5 CM2150 SN, ISB CM550, QSB5.9 CM850, B Gas International CM556, QSB4.5-30 CM550, ISBe CM800, ISBe5 CM2150 SN, QSB4.5 CM850, B5.9, ISBe CM850			

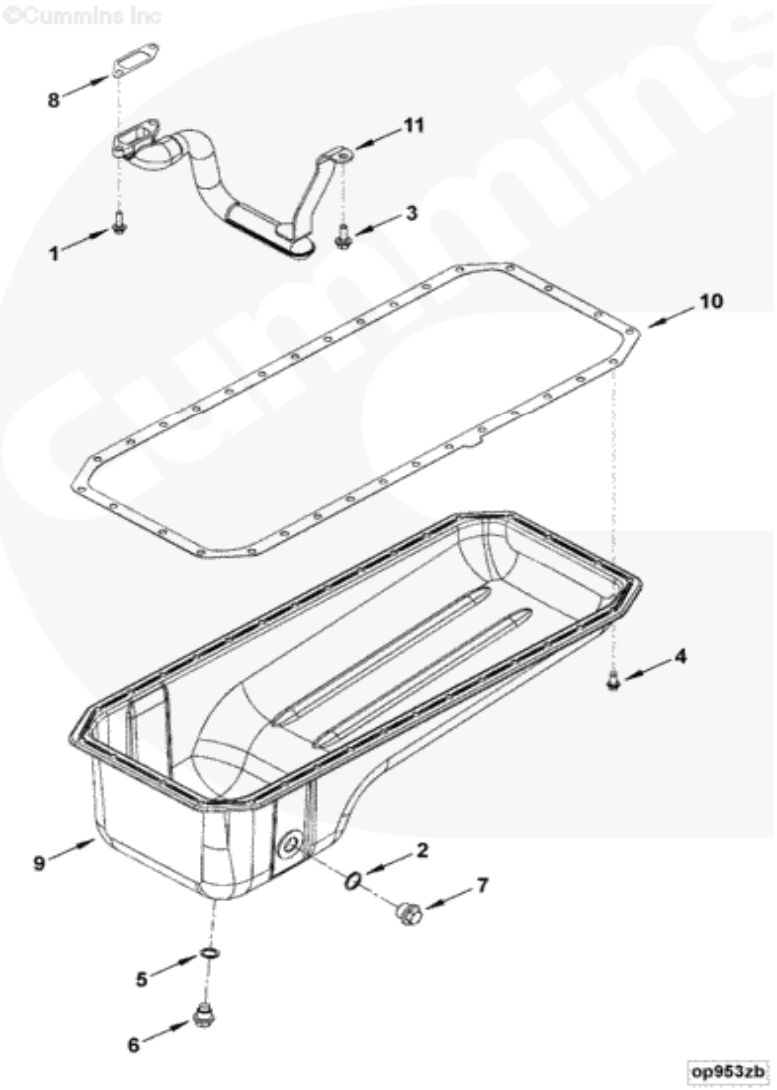

Ref No	Part Number	For-Sale	Shopping Cart	Part Name	Required	Remarks
	OP9315-05	NO		Oil Pan		Oil Pan
						Engine Family: "B" Series
						Cylinders: 6 sump location:
						Front oil pan material:
						Stamped steel mounting type:
						Non-isolated pan high
						capacity (qt): 15 pan low
						capacity (qt): 13 pan front

						up angularity(deg): TBD pan
						front down angularity(deg):
						TBD pan side to side
						angularity(deg): TBD drain
						size: M18
						Drain Location: Botton
						position from FFOB (mm):
						123.8 position From Crank
						CL (mm): Heater Boss Size:
						M22 heater Boss Location:
						Side position from FFOB
						(mm): 123.8 position from
						crank CL (mm): 222.6
						Oil Level Sensor Provision:
						No required block flange
						(mm): 299 x 678 oil pan
						mounting holes: 9.9mm thru
						holes oil pan/block mounting
						holes: 24
						Spacing: Unequal oil
						pan/rear gear housing
						mounting holes: 4
						Spacing: Unequal oil
						pan/front gear cover mounting
						holes: 4
						Spacing: Unequal required
						dipstick calibrations: BFOB-
						full/low at 112 FFOB
						and 4 degrees:
						69.0/78.5 bfob-full/low at
						352 FFOB and 4
						degrees: 51.7/60.9
1	3900631	YES	ADD	Screw, Hexagon Flange Head Cap	2	M8 X 1.25 X 25
2	3902425	YES	ADD	Washer, Sealing	1	M22
3	3902460	YES	ADD	Screw, Hexagon Flange Head Cap	2	M10 X 1.50 X 25
4	3920400	YES	ADD	Screw, Hexagon Flange Head Cap	32	M8 X 1.25 X 21
5	3920773	YES	ADD	Washer, Sealing	1	M18
6	3924147	YES	ADD	Plug, Threaded	1	M18 X 1.50
7	3924148	YES	ADD	Plug, Threaded	1	M22 X 1.50 X 14
8	3949562	YES	ADD	Gasket, Flange	1	
9	3958209	YES	ADD	Pan, Oil	1	
10	3959797	YES	ADD	Gasket, Oil Pan	1	
11	3977666	YES	ADD	Tube, Lub Oil Suction	1	

PAINT

Electronic Parts Catalog - Option Detail				
Option	Group	Graphic	Film Card	Date
SS9190	06.01	null	T	9-Mar-99
Engines	ISD4.5 CM2150, B5.9 LPG Plus CM556, G5.9, ISB 5.9 G CM2180, B4.5s, ISF3.8 CM2220 AN, ISB6.7 CM2250, B4.5 RGT, ISB CM800, QSB5.9-44 CM550, B5.9 G, G3.9, ISBe4 CM850, ISD6.7 CM2150, ISD6.7 CM2150 SN, QSB6.7 CM2250, QSB3.9-30 CM550, QSB5.9-30 CM550, B Gas Plus CM556, B6.7s, ISB CM2150, ISD4.5 CM2150 SN, ISB CM850, B LPG Plus CM556, B4.5, B3.9, ISF2.8 CM2220 AN, ISB6.7 CM2150 SN, QSB6.7 CM850, ISBe4 CM2150, G5.9 CM558, ISB6.7 CM2150 SQ, ISB4.5 CM2150 SN, ISB CM550, QSB5.9 CM850, B Gas International CM556, QSB4.5-30 CM550, ISBe CM800, ISBe5 CM2150 SN, QSB4.5 CM850, B5.9, ISBe CM850			

Ref No	Part Number	For-Sale	Shopping Cart	Part Name	Required	Remarks
	SS9190	NO		Paint		Paint
						Engine Families: B,C, and D
						Paint Color: Titantium Black
						Valve Cover Type:Ti-Black and
				No Content Option		Red
						Hue 9
						Value: 1.44
						Chroma: .95
						Gloss Level @ 60 Degrees: 95
						Structure Language: 03 EBM
						Unique Characteristics

PLUMBING,TURBOCHARGER

Electronic Parts Catalog - Option Detail				
Option	Group	Graphic	Film Card	Date
TP97519	10.06.2	tp962gq	T	20-Jul-09
Engines	ISD4.5 CM2150, B5.9 LPG Plus CM556, G5.9, ISB 5.9 G CM2180, B4.5s, ISF3.8 CM2220 AN, ISB6.7 CM2250, B4.5 RGT, ISB CM800, QSB5.9-44 CM550, B5.9 G, G3.9, ISBe4 CM850, ISD6.7 CM2150, ISD6.7 CM2150 SN, QSB6.7 CM2250, QSB3.9-30 CM550, QSB5.9-30 CM550, B Gas Plus CM556, B6.7s, ISB CM2150, ISD4.5 CM2150 SN, ISB CM850, B LPG Plus CM556, B4.5, B3.9, ISF2.8 CM2220 AN, ISB6.7 CM2150 SN, QSB6.7 CM850, ISBe4 CM2150, G5.9 CM558, ISB6.7 CM2150 SQ, ISB4.5 CM2150 SN, ISB CM550, QSB5.9 CM850, B Gas International CM556, QSB4.5-30 CM550, ISBe CM800, ISBe5 CM2150 SN, QSB4.5 CM850, B5.9, ISBe CM850			

©Cummins Inc

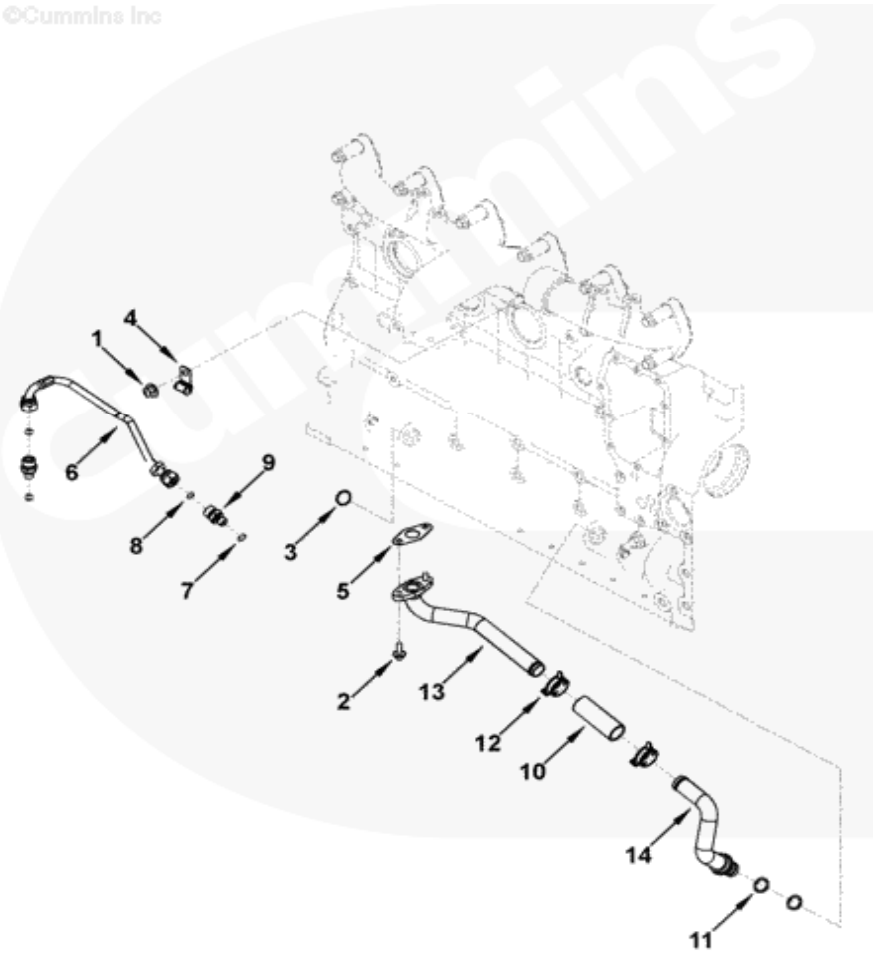

tp962gq

Ref No	Part Number	For-Sale	Shopping Cart	Part Name	Required	Remarks
	TP97519	NO		Turbocharger Plumbing		Turbocharger Plumbing
						Structure Code: Mr 03 EBM
						engine design phase: B743
						Engine Cylinders: 6
						Engine Family: "B" Series
						Turbocharger exhaust
						location: LMFO
						Oil Filter Mounted Location:

						Vertical
						Turbocharger supply line
						routing: Inboard block drain
						location: Front drain
						Fuel Type: Diesel required
						exhaust manifold type: Dry
						bearing housing manfacturer:
						Holset
						Turbocharger Drain Line Type:
						3-Piece bearing housing
						cooling provision: Oil
						cooled for hy35 w, HX35 w,
						HX35 turbochargers. Dcec may
						use part number 4935913 in
						place of 3965818.
1	3093828	YES	ADD	Nut, Hexagon Flange	1	
2	3900630	YES	ADD	Screw, Hexagon Flange Head Cap	2	M8 X 1.25 X 20
3	3920706	YES	ADD	Plug, Expansion	1	
4	3965818	YES	ADD	Clamp, Tube	1	
5	4891288	YES	ADD	Gasket, Oil Drain	1	
6	4992268	YES	ADD	Hose, Flexible	1	
	4940183	YES	ADD	Union, Male	2	
7	3678603	YES	ADD	Seal, O Ring	1	
8	3922794	YES	ADD	Seal, O Ring	1	
9	4940182	YES	ADD	Union, Male	1	
	4992206	YES	ADD	Connection, Turbocharger Oil Drain	1	
10	5263842	YES	ADD	Hose, Plain	1	
11	3928624	YES	ADD	Seal, O Ring	2	
12	3937613	YES	ADD	Clamp, Hose	2	
13	4992207	YES	ADD	Connection, Turbocharger Oil Drain	1	
14	4993477	NO		Connection, Turbocharger Oil Drain	1	

PUMP,WATER

Electronic Parts Catalog - Option Detail				
Option	Group	Graphic	Film Card	Date
WP9757-02	08.01	wp952ga	T	16-Jun-04
Engines	ISD4.5 CM2150, B5.9 LPG Plus CM556, G5.9, ISB 5.9 G CM2180, B4.5s, ISF3.8 CM2220 AN, ISB6.7 CM2250, B4.5 RGT, ISB CM800, QSB5.9-44 CM550, B5.9 G, G3.9, ISBe4 CM850, ISD6.7 CM2150, ISD6.7 CM2150 SN, QSB6.7 CM2250, QSB3.9-30 CM550, QSB5.9-30 CM550, B Gas Plus CM556, B6.7s, ISB CM2150, ISD4.5 CM2150 SN, ISB CM850, B LPG Plus CM556, B4.5, B3.9, ISF2.8 CM2220 AN, ISB6.7 CM2150 SN, QSB6.7 CM850, ISBe4 CM2150, G5.9 CM558, ISB6.7 CM2150 SQ, ISB4.5 CM2150 SN, ISB CM550, QSB5.9 CM850, B Gas International CM556, QSB4.5-30 CM550, ISBe CM800, ISBe5 CM2150 SN, QSB4.5 CM850, B5.9, ISBe CM850			

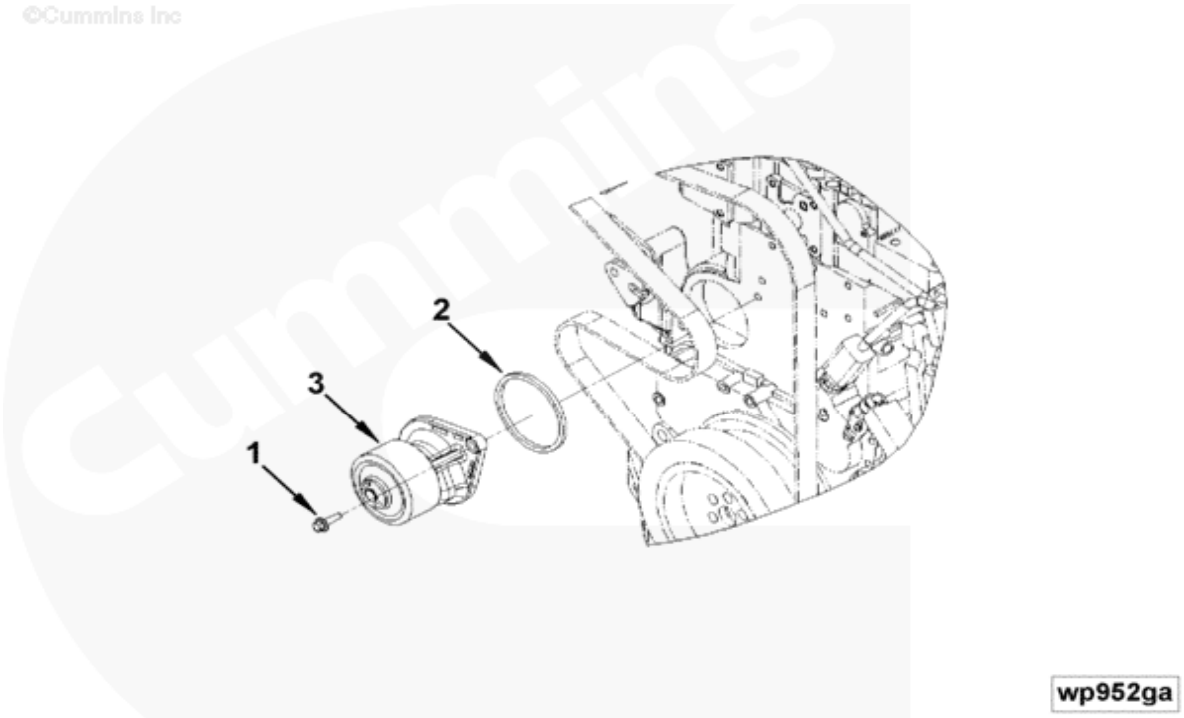

Ref No	Part Number	For-Sale	Shopping Cart	Part Name	Required	Remarks
	WP9757-02	NO		Water Pump		Water Pump
						Pulley Type: Standard
						Pulley Diameter: 88
						Pulley Hardness: HRC 50
						Water Pump Location From
						CL of Crank: -108
						CL of Engine: 80
						Front Face of Block: 103.3.
1	3093730	YES	ADD	Screw, Hexagon Flange Head Cap	2	M8 X 1.25 X 25
	3800984	YES	ADD	Pump, Water	1	Recon Equiv. 3800984 NX/RX
2	3906698	YES	ADD	Seal, Rectangular Ring	1	
3	4891252	NO		Pump, Water	1	Serviced as 3800984

RATING,FUEL

Electronic Parts Catalog - Option Detail				
Option	Group	Graphic	Film Card	Date
FR91436	99.01	null	T	4-Jun-11
Engines	ISD4.5 CM2150, B5.9 LPG Plus CM556, G5.9, ISB 5.9 G CM2180, B4.5s, ISF3.8 CM2220 AN, ISB6.7 CM2250, B4.5 RGT, ISB CM800, QSB5.9-44 CM550, B5.9 G, G3.9, ISBe4 CM850, ISD6.7 CM2150, ISD6.7 CM2150 SN, QSB6.7 CM2250, QSB3.9-30 CM550, QSB5.9-30 CM550, B Gas Plus CM556, B6.7s, ISB CM2150, ISD4.5 CM2150 SN, ISB CM850, B LPG Plus CM556, B4.5, B3.9, ISF2.8 CM2220 AN, ISB6.7 CM2150 SN, QSB6.7 CM850, ISBe4 CM2150, G5.9 CM558, ISB6.7 CM2150 SQ, ISB4.5 CM2150 SN, ISB CM550, QSB5.9 CM850, B Gas International CM556, QSB4.5-30 CM550, ISBe CM800, ISBe5 CM2150 SN, QSB4.5 CM850, B5.9, ISBe CM850			

Ref No	Part Number	For-Sale	Shopping Cart	Part Name	Required	Remarks
	FR91436	NO		RATING,FUEL		Mr - fuel rating
						rated power: 173 BHP at 2200
						RPM
						Peak torque: 590 lbs. FT at
						1400 RPM
						Governed Power: 173 BHP At
						2200 RPM
						CPL: 0426
						Certified By: EPA,CARB,Eu
						cal. Restr: No
						Power Rating: No
						Engine Control System: E2 I
						Application: Non Road cert
						level: Tier 3,tier 3,stiiia
						Engine Family: "B" Series
						Cylinders: 6 engine design
						phase: Tier3 b
						Engine Aspiration: Charged
						Air Cooled fuel pump
						manufacturer/model:
						Bosch CP3.3 ECM version:
						CM850 manufacturer of record:
						Cummins ambient air pressure
						sensor: Yes
						Fuel Type: Diesel FP gear
						timing (deg crank:) N/A
						Speed Sensor Location: Crank
						cylinder head valve seat
						inserts: Yes
						Turbocharger ID17 P/N:
						4038289, 4038597, 4038598,
						4039632, 4044098, 4044103,
						4044324.

REAR GEAR HOUSING

Electronic Parts Catalog - Option Detail				
Option	Group	Graphic	Film Card	Date
BB9132-02	01.06	bb903gl	T	10-Apr-06
Engines	ISD4.5 CM2150, B5.9 LPG Plus CM556, G5.9, ISB 5.9 G CM2180, B4.5s, ISF3.8 CM2220 AN, ISB6.7 CM2250, B4.5 RGT, ISB CM800, QSB5.9-44 CM550, B5.9 G, G3.9, ISBe4 CM850, ISD6.7 CM2150, ISD6.7 CM2150 SN, QSB6.7 CM2250, QSB3.9-30 CM550, QSB5.9-30 CM550, B Gas Plus CM556, B6.7s, ISB CM2150, ISD4.5 CM2150 SN, ISB CM850, B LPG Plus CM556, B4.5, B3.9, ISF2.8 CM2220 AN, ISB6.7 CM2150 SN, QSB6.7 CM850, ISBe4 CM2150, G5.9 CM558, ISB6.7 CM2150 SQ, ISB4.5 CM2150 SN, ISB CM550, QSB5.9 CM850, B Gas International CM556, QSB4.5-30 CM550, ISBe CM800, ISBe5 CM2150 SN, QSB4.5 CM850, B5.9, ISBe CM850			

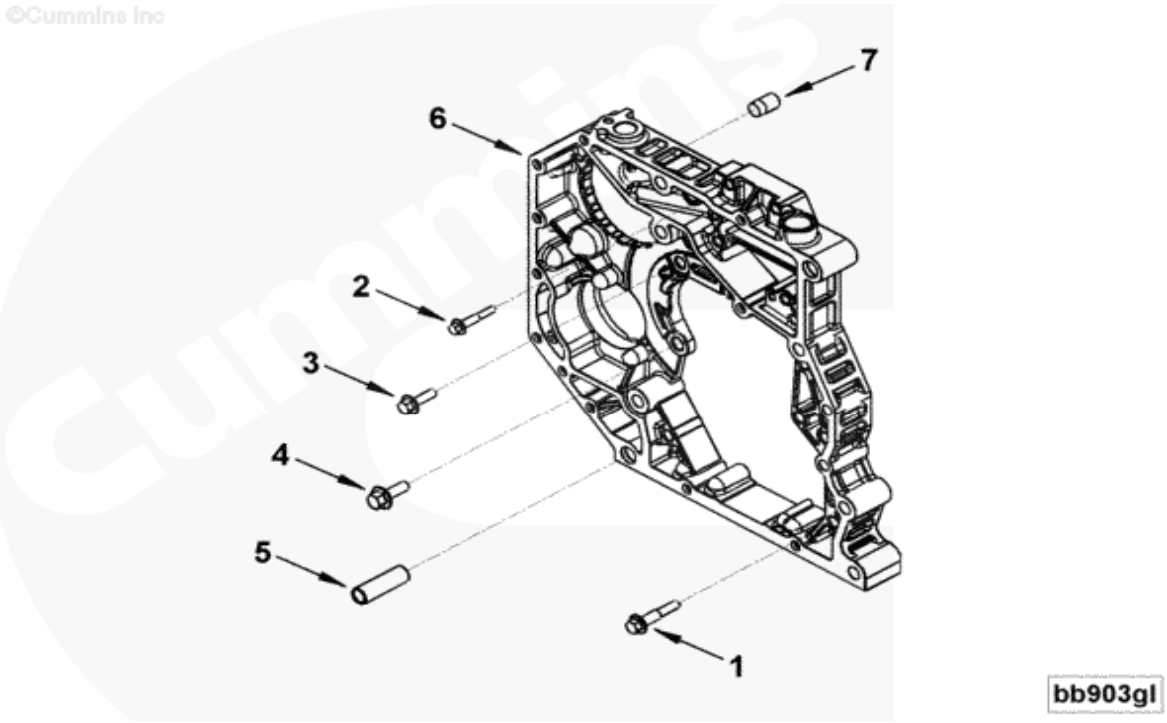

Ref No	Part Number	For-Sale	Shopping Cart	Part Name	Required	Remarks
	BB9132-02	NO		Rear Gear Housing		Rear Gear Housing
1	3918153	YES	ADD	Screw, Hexagon Flange Head Cap	3	M10 X 1.50 X 50
2	3901445	YES	ADD	Screw, Hexagon Flange Head Cap	4	M8 X 1.25 X 45
3	3903112	YES	ADD	Screw, Hexagon Flange Head Cap	2	M10 X 1.50 X 30
4	3910495	YES	ADD	Screw, Hexagon Flange Head Cap	1	M12 X 1.75 X 30
	4936424	YES	ADD	Housing, Gear	1	
5	3954616	YES	ADD	Dowel, Ring	2	
6	4936421	NO		Housing, Gear	1	
7	4929128	YES	ADD	Insert, Threaded	2	

SET,LOWER ENGINE GASKET

Electronic Parts Catalog - Option Detail				
Option	Group	Graphic	Film Card	Date
4955230	17.01	null	T	1-Feb-99
Engines	ISD4.5 CM2150, B5.9 LPG Plus CM556, G5.9, ISB 5.9 G CM2180, B4.5s, ISF3.8 CM2220 AN, ISB6.7 CM2250, B4.5 RGT, ISB CM800, QSB5.9-44 CM550, B5.9 G, G3.9, ISBe4 CM850, ISD6.7 CM2150, ISD6.7 CM2150 SN, QSB6.7 CM2250, QSB3.9-30 CM550, QSB5.9-30 CM550, B Gas Plus CM556, B6.7s, ISB CM2150, ISD4.5 CM2150 SN, ISB CM850, B LPG Plus CM556, B4.5, B3.9, ISF2.8 CM2220 AN, ISB6.7 CM2150 SN, QSB6.7 CM850, ISBe4 CM2150, G5.9 CM558, ISB6.7 CM2150 SQ, ISB4.5 CM2150 SN, ISB CM550, QSB5.9 CM850, B Gas International CM556, QSB4.5-30 CM550, ISBe CM800, ISBe5 CM2150 SN, QSB4.5 CM850, B5.9, ISBe CM850			

Ref No	Part Number	For-Sale	Shopping Cart	Part Name	Required	Remarks
				$Set,Lower Engine Gasket		
	4955230	YES	ADD	Set, Lower Engine Gasket		
	2830409	YES	ADD	Seal, O Ring	1	
	2830559	YES	ADD	Gasket, Oil Cooler Core	1	Serviced as 3977913
	2831077	YES	ADD	Gasket, Filter Head	1	
	3902425	YES	ADD	Washer, Sealing	1	
	3906252	YES	ADD	Seal, Rectangular Ring	1	
	3906697	YES	ADD	Seal, Rectangular Ring	2	
	3906698	YES	ADD	Seal, Rectangular Ring	1	
	3929457	YES	ADD	Seal, O Ring	1	
	3939258	YES	ADD	Gasket, Cover Plate	1	
	3939357	YES	ADD	Gasket, Cover Plate	1	
	3949562	YES	ADD	Gasket, Flange	1	
	3959797	YES	ADD	Gasket, Oil Pan	1	
	3963988	YES	ADD	Washer, Sealing	1	
	3963990	YES	ADD	Washer, Sealing	1	
	3974127	YES	ADD	Gasket, Filter Head	1	Serviced as 3977913
	4890832	YES	ADD	Seal, Oil	1	
	4895710	YES	ADD	Seal, O Ring	1	
	4898301	YES	ADD	Gasket, Oil Suc Connection	1	
	4898372	YES	ADD	Seal, O Ring	1	
	4934344	YES	ADD	Gasket, Oil Pan	1	
	4955372	YES	ADD	Kit, Rear Crank Seal	1	
	3904325	NO		Tool, Seal Installation	1	
	3909409	NO		Tool, Seal Installation	1	
	4936646	NO		Seal, Oil	1	Serviced as 4955372

SET,UPPER ENGINE GASKET

Electronic Parts Catalog - Option Detail				
Option	Group	Graphic	Film Card	Date
4955229	17.01	null	T	1-Feb-99
Engines	ISD4.5 CM2150, B5.9 LPG Plus CM556, G5.9, ISB 5.9 G CM2180, B4.5s, ISF3.8 CM2220 AN, ISB6.7 CM2250, B4.5 RGT, ISB CM800, QSB5.9-44 CM550, B5.9 G, G3.9, ISBe4 CM850, ISD6.7 CM2150, ISD6.7 CM2150 SN, QSB6.7 CM2250, QSB3.9-30 CM550, QSB5.9-30 CM550, B Gas Plus CM556, B6.7s, ISB CM2150, ISD4.5 CM2150 SN, ISB CM850, B LPG Plus CM556, B4.5, B3.9, ISF2.8 CM2220 AN, ISB6.7 CM2150 SN, QSB6.7 CM850, ISBe4 CM2150, G5.9 CM558, ISB6.7 CM2150 SQ, ISB4.5 CM2150 SN, ISB CM550, QSB5.9 CM850, B Gas International CM556, QSB4.5-30 CM550, ISBe CM800, ISBe5 CM2150 SN, QSB4.5 CM850, B5.9, ISBe CM850			

Ref No	Part Number	For-Sale	Shopping Cart	Part Name	Required	Remarks
				$Set,Upper Engine Gasket		
	4955229	YES	ADD	Set, Upper Engine Gasket		
	2830409	YES	ADD	Seal, O Ring	1	
	3678603	YES	ADD	Seal, O Ring	2	
	3678925	YES	ADD	Seal, O Ring	1	M10
	3867646	YES	ADD	Seal, O Ring	1	
	3906698	YES	ADD	Seal, Rectangular Ring	1	
	3919869	NO		Gear, Idler	1	
	3922794	YES	ADD	Seal, O Ring	2	
	3928624	YES	ADD	Seal, O Ring	2	
	3947530	YES	ADD	Gasket, Int Manifold Cover	1	
	3949530	YES	ADD	Gasket, Turbocharger	1	
	3954829	YES	ADD	Seal, Thermostat	1	
	3955339	YES	ADD	Gasket, Exhaust Manifold	6	
	3963983	YES	ADD	Washer, Sealing	5	
	3963988	YES	ADD	Washer, Sealing	1	
	3963990	YES	ADD	Washer, Sealing	7	
	3969988	YES	ADD	Gasket, Connection	2	
	3976371	YES	ADD	Seal, Injector	6	
	3977393	YES	ADD	Seal, O Ring	6	
	4010643	YES	ADD	Seal, O Ring	2	
	4891288	YES	ADD	Gasket, Oil Drain	2	
	4896897	YES	ADD	Gasket, Accessory Drive Cover	1	
	4898372	YES	ADD	Seal, O Ring	1	
	4899226	YES	ADD	Gasket, Valve Cover	1	
	4899231	YES	ADD	Gasket, Rkr Lever Housing	1	
	4931365	NO		Gasket, Oil Drain	1	Replace With 5264568
	4932210	YES	ADD	Gasket, Cylinder Head	1	

SOFTWARE,CALIBRATION

Electronic Parts Catalog - Option Detail				
Option	Group	Graphic	Film Card	Date
SC98090	99.01	null	T	17-Sep-08
Engines	ISD4.5 CM2150, B5.9 LPG Plus CM556, G5.9, ISB 5.9 G CM2180, B4.5s, ISF3.8 CM2220 AN, ISB6.7 CM2250, B4.5 RGT, ISB CM800, QSB5.9-44 CM550, B5.9 G, G3.9, ISBe4 CM850, ISD6.7 CM2150, ISD6.7 CM2150 SN, QSB6.7 CM2250, QSB3.9-30 CM550, QSB5.9-30 CM550, B Gas Plus CM556, B6.7s, ISB CM2150, ISD4.5 CM2150 SN, ISB CM850, B LPG Plus CM556, B4.5, B3.9, ISF2.8 CM2220 AN, ISB6.7 CM2150 SN, QSB6.7 CM850, ISBe4 CM2150, G5.9 CM558, ISB6.7 CM2150 SQ, ISB4.5 CM2150 SN, ISB CM550, QSB5.9 CM850, B Gas International CM556, QSB4.5-30 CM550, ISBe CM800, ISBe5 CM2150 SN, QSB4.5 CM850, B5.9, ISBe CM850			

Ref No	Part Number	For-Sale	Shopping Cart	Part Name	Required	Remarks
	SC98090	NO		SOFTWARE,CALIBRATION		Software calibration
						CPL: 0426
						Engine Control System: E2 I
						rated power: 173 BHP (129
						KW) at 2200 RPM
						Peak torque: 590 lbs. FT at
						1400 RPM
						Governed Power: 173 BHP (129
						KW)@ 2200 RPM
						Governed Torque: 413 Lbs.
						FT (560 N-M)
						Certified By: EPA, CARB, Eu
						Application: Nonroad cal
						restr: None
						Power Rating:
						Continuous
						Calibration Voltage: 12 And
						24 speed input: N/A comment:
						Ph 14 cert level: Tier
						3,tier 3,stiiia not used:
						ECM controlled start aid:
						Yes
						Engine Family: "B" Series
						ambient air pressure sensor:
						Yes software phase:
						P14010010 history: N/A
						manufacturer of record:
						Cummins.

SOFTWARE,CUS INTERFACE

Electronic Parts Catalog - Option Detail				
Option	Group	Graphic	Film Card	Date
DO90963	99.01	null	T	4-Jun-11
Engines	ISD4.5 CM2150, B5.9 LPG Plus CM556, G5.9, ISB 5.9 G CM2180, B4.5s, ISF3.8 CM2220 AN, ISB6.7 CM2250, B4.5 RGT, ISB CM800, QSB5.9-44 CM550, B5.9 G, G3.9, ISBe4 CM850, ISD6.7 CM2150, ISD6.7 CM2150 SN, QSB6.7 CM2250, QSB3.9-30 CM550, QSB5.9-30 CM550, B Gas Plus CM556, B6.7s, ISB CM2150, ISD4.5 CM2150 SN, ISB CM850, B LPG Plus CM556, B4.5, B3.9, ISF2.8 CM2220 AN, ISB6.7 CM2150 SN, QSB6.7 CM850, ISBe4 CM2150, G5.9 CM558, ISB6.7 CM2150 SQ, ISB4.5 CM2150 SN, ISB CM550, QSB5.9 CM850, B Gas International CM556, QSB4.5-30 CM550, ISBe CM800, ISBe5 CM2150 SN, QSB4.5 CM850, B5.9, ISBe CM850			

Ref No	Part Number	For-Sale	Shopping Cart	Part Name	Required	Remarks
	DO90963	NO		SOFTWARE,CUSTOMER INTERFACE		Customer software interface
						Engine Control System: E2 I
						Transmission: Generic
						Commun Support: J1939
						cust/OEM name: Kalmar
						cust/OEM model: Generic
						cust/OEM app: Yard spotter
						Remote Throttle: No
						High Idle: 2390 RPM
						Low Idle: 750 RPM ISC
						enable: Yes
						ISC Validation: No switch
						speed input: No
						Torque Curve Selection: No
						ASG/axg/min/max: ASG
						governor droop: 7% idle
						validation: No
						Multiple Unit
						Synchronization: N/A
						Output Driver Setup: Yes
						Calibration Voltage: 24
						Throttle Type: Williams
						Pedal Or Equivalent comment:
						N/A powermatch: No guid:
						N/A governor break: 2230 RPM
						engine brake provision: No
						electronic fan clutch: No
						Oil Pressure Sensor Type:
						Switch
						Engine Family: Qsb6(t3)
						applicable FR option:
						FR91436.

THERMOSTAT

Electronic Parts Catalog - Option Detail				
Option	Group	Graphic	Film Card	Date
EC9045	08.07	ec900zf	T	22-Feb-04
Engines	ISD4.5 CM2150, B5.9 LPG Plus CM556, G5.9, ISB 5.9 G CM2180, B4.5s, ISF3.8 CM2220 AN, ISB6.7 CM2250, B4.5 RGT, ISB CM800, QSB5.9-44 CM550, B5.9 G, G3.9, ISBe4 CM850, ISD6.7 CM2150, ISD6.7 CM2150 SN, QSB6.7 CM2250, QSB3.9-30 CM550, QSB5.9-30 CM550, B Gas Plus CM556, B6.7s, ISB CM2150, ISD4.5 CM2150 SN, ISB CM850, B LPG Plus CM556, B4.5, B3.9, ISF2.8 CM2220 AN, ISB6.7 CM2150 SN, QSB6.7 CM850, ISBe4 CM2150, G5.9 CM558, ISB6.7 CM2150 SQ, ISB4.5 CM2150 SN, ISB CM550, QSB5.9 CM850, B Gas International CM556, QSB4.5-30 CM550, ISBe CM800, ISBe5 CM2150 SN, QSB4.5 CM850, B5.9, ISBe CM850			

©Cummins Inc

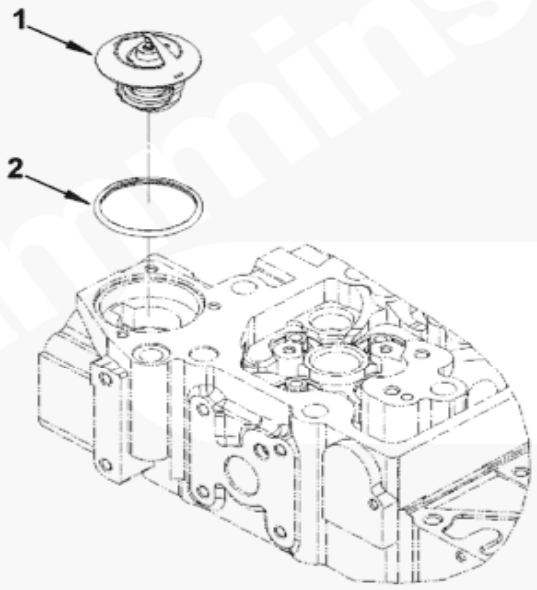

ec900zf

Ref No	Part Number	For-Sale	Shopping Cart	Part Name	Required	Remarks
	EC9045	NO		Thermostat		Thermostat
						Thermostat Opening
						Temperature: 83 C
						Number of Thermostats: 1
						Thermostat Type:
						Non-Balanced or Poppet
						Vented Non-Vented: Vented
						With Jiggle-Pin
						By-Pass Type: Mechanical
						Plug
						Engine Family: "B" Series
						Required Housing Bore
						Diameter: 60.96 mm (2.4 in)
						Low Gain Thermostat: Yes
						Maximum Temperature
						Capability: 118.3 C (245 F)
						One Notch High Metal Weir
						D-Ring Seal.
						Material: Nitrile
	3974823	YES	ADD	Thermostat	1	
1	3973834	YES	ADD	Thermostat	1	
2	3954829	YES	ADD	Seal, Thermostat	1	

TURBOCHARGER

Electronic Parts Catalog - Option Detail				
Option	Group	Graphic	Film Card	Date
PP98723	10.05	pp972gq	T	13-May-10
Engines	ISD4.5 CM2150, B5.9 LPG Plus CM556, G5.9, ISB 5.9 G CM2180, B4.5s, ISF3.8 CM2220 AN, ISB6.7 CM2250, B4.5 RGT, ISB CM800, QSB5.9-44 CM550, B5.9 G, G3.9, ISBe4 CM850, ISD6.7 CM2150, ISD6.7 CM2150 SN, QSB6.7 CM2250, QSB3.9-30 CM550, QSB5.9-30 CM550, B Gas Plus CM556, B6.7s, ISB CM2150, ISD4.5 CM2150 SN, ISB CM850, B LPG Plus CM556, B4.5, B3.9, ISF2.8 CM2220 AN, ISB6.7 CM2150 SN, QSB6.7 CM850, ISBe4 CM2150, G5.9 CM558, ISB6.7 CM2150 SQ, ISB4.5 CM2150 SN, ISB CM550, QSB5.9 CM850, B Gas International CM556, QSB4.5-30 CM550, ISBe CM800, ISBe5 CM2150 SN, QSB4.5 CM850, B5.9, ISBe CM850			

©Cummins Inc

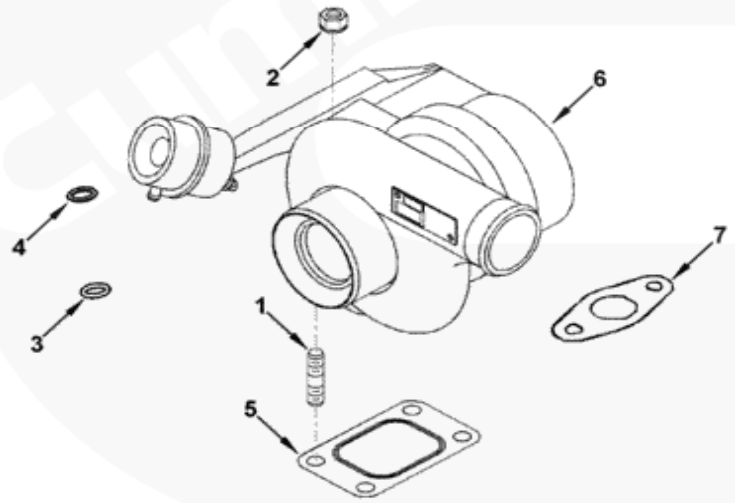

pp972gq

Ref No	Part Number	For-Sale	Shopping Cart	Part Name	Required	Remarks
	PP98723	NO		Turbocharger		Turbocharger
						Engine Cylinders: 6
						Engine Family: "B" Series
						engine design phase: Tier 3
						Exhaust Outlet Location: LMFO
						X= 344 Y= 239 Z= 212
						base ID17 turbo: 4039632
						Turbocharger Type: Wastegate

						wastegate pressure setting
						(BAR): 1.93
						Turbocharger model: HX35 w
						fixed compressor outlet
						orientation (deg): 150
						CPR angle (shipping deg): 330
						Turbine angle (deg): 180
						Engine Aspiration: Charged
						Air Cooled
						Heat Shield provision: No
1	3818823	YES	ADD	Stud	4	M10 X 1.5-6G Both Ends
2	3818824	YES	ADD	Nut, Hexagon Flange	4	M10 X 1.50
	4955156	YES	ADD	Kit, Turbocharger	1	Recon Equivalent 4955156 RX
3	3678603	YES	ADD	Seal, O Ring	1	
4	3922794	YES	ADD	Seal, O Ring	1	
5	3949530	YES	ADD	Gasket, Turbocharger	1	
6	4038289	NO		Turbocharger	1	Serviced as 4955156
7	5264568	YES	ADD	Gasket, Oil Drain	1	Same as 4931365, no Adhesive

TURBOCHARGER

Electronic Parts Catalog - Option Detail				
Option	Group	Graphic	Film Card	Date
PP98723	10.06	pp989gz	T	13-May-10
Engines	ISD4.5 CM2150, B5.9 LPG Plus CM556, G5.9, ISB 5.9 G CM2180, B4.5s, ISF3.8 CM2220 AN, ISB6.7 CM2250, B4.5 RGT, ISB CM800, QSB5.9-44 CM550, B5.9 G, G3.9, ISBe4 CM850, ISD6.7 CM2150, ISD6.7 CM2150 SN, QSB6.7 CM2250, QSB3.9-30 CM550, QSB5.9-30 CM550, B Gas Plus CM556, B6.7s, ISB CM2150, ISD4.5 CM2150 SN, ISB CM850, B LPG Plus CM556, B4.5, B3.9, ISF2.8 CM2220 AN, ISB6.7 CM2150 SN, QSB6.7 CM850, ISBe4 CM2150, G5.9 CM558, ISB6.7 CM2150 SQ, ISB4.5 CM2150 SN, ISB CM550, QSB5.9 CM850, B Gas International CM556, QSB4.5-30 CM550, ISBe CM800, ISBe5 CM2150 SN, QSB4.5 CM850, B5.9, ISBe CM850			

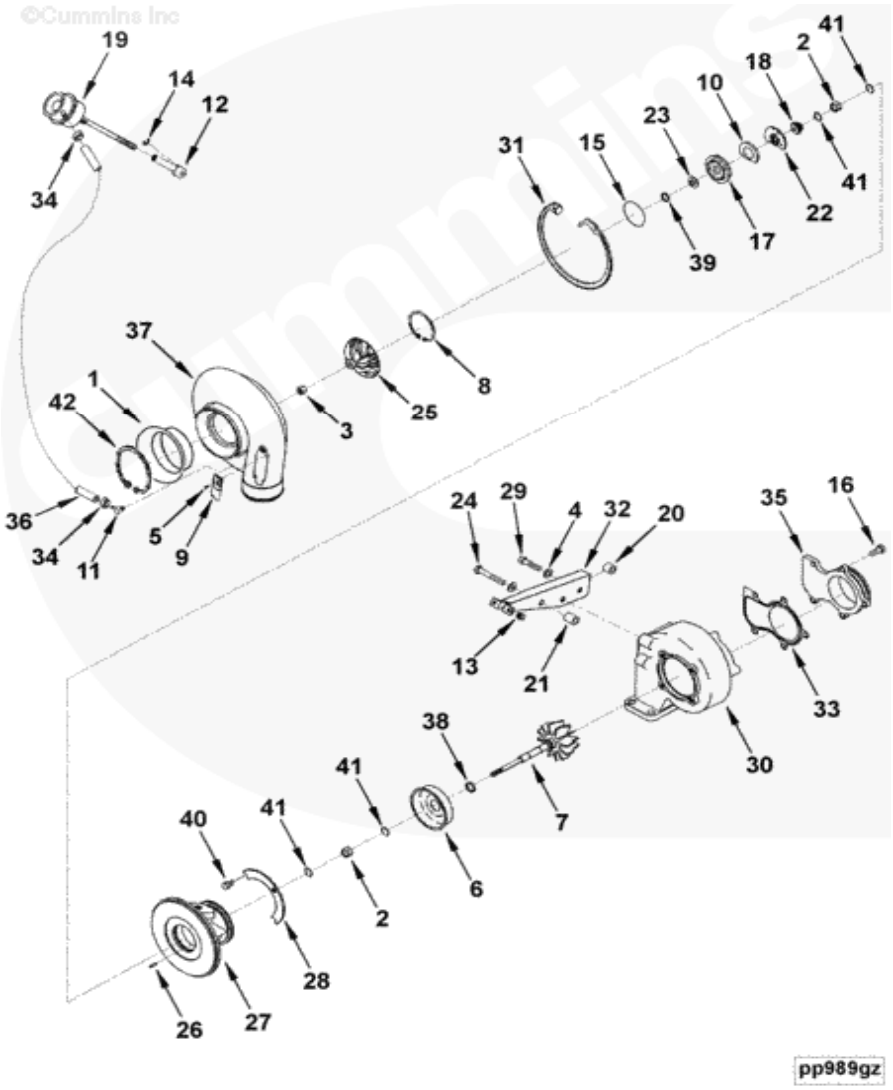

Ref No	Part Number	For-Sale	Shopping Cart	Part Name	Required	Remarks
	PP98723	NO		Turbocharger		Turbocharger
	4955156	YES	ADD	Kit, Turbocharger	1	Recon Equivalent 4955156 RX
	4038597	NO		Turbocharger	1	Serviced as 4955156
1	3532427	NO		Baffle, Turbocharger Noise	1	
2	3503100	YES	ADD	Bearing, Turbocharger	2	
3	3596402	YES	ADD	Nut, Lock	1	
4	3504967	YES	ADD	Washer, Plain	3	

5	3519163	YES	ADD	Screw, Drive	2	
6	3519302	YES	ADD	Shield, Turbocharger Heat	1	
7	3519336	YES	ADD	Shaft & Wheel	1	
8	3527566	YES	ADD	Ring, Retaining	1	
9	3527619	NO		Dataplate	1	
10	3528104	YES	ADD	Baffle, Oil	1	
11	3528121	YES	ADD	Coupling, Elbow Hose	1	
12	3528177	NO		End, Adjusting Link	1	
13	3592050	YES	ADD	Nut, Hexagon Flange	2	
14	3528221	YES	ADD	Ring, Retaining	1	
15	3528933	YES	ADD	Seal, O Ring	1	
16	3530556	YES	ADD	Screw, Hexagon Head Set	5	M8 X 1.25 X 20
17	3530923	YES	ADD	Plate, Oil Seal	1	
18	3530924	YES	ADD	Slinger, Oil	1	
19	3598471	NO		Actuator, Turbocharger	1	
20	3532195	YES	ADD	Spacer, Mounting	3	
21	3532196	YES	ADD	Spacer, Mounting	1	
22	3595651	YES	ADD	Bearing, Tur Thrust	1	
23	3532217	YES	ADD	Collar, Thrust	1	
24	3539209	YES	ADD	Screw, Hexagon Head Set	1	
25	3599649	NO		Impeller, Tur Compressor	1	
26	3522597	YES	ADD	Pin, Roll	1	
27	4035900	NO		Housing, Tur Bearing	1	
28	3534309	YES	ADD	Plate, Clamping	2	
29	3534291	YES	ADD	Screw, Hexagon Head Set	2	
30	3529882	YES	ADD	Housing, Turbine	1	
31	3533163	YES	ADD	Ring, Retaining	1	
32	4041846	NO		Bracket, Actuator	1	
33	3535001	YES	ADD	Gasket, Adapter	1	
34	3535215	YES	ADD	Clamp, Hose	2	
35	3527759	YES	ADD	Connection, Adapter	1	
36	4048726	NO		Hose, Plain	1	
37	3537726	NO		Housing, Compressor	1	
38	3756754	YES	ADD	Seal, Split Ring	1	
39	3758848	YES	ADD	Seal, Split Ring	1	
40	3759917	YES	ADD	Screw, Hexagon Head Set	4	M8 X 1.25 X 12
41	3762259	YES	ADD	Ring, Retaining	4	
42	3531238	YES	ADD	Ring, Retaining	1	

VALVE TAPPETS

Electronic Parts Catalog - Option Detail				
Option	Group	Graphic	Film Card	Date
BB9206	04.01	bb902zk	T	1-Feb-10
Engines	ISD4.5 CM2150, B5.9 LPG Plus CM556, G5.9, ISB 5.9 G CM2180, B4.5s, ISF3.8 CM2220 AN, ISB6.7 CM2250, B4.5 RGT, ISB CM800, QSB5.9-44 CM550, B5.9 G, G3.9, ISBe4 CM850, ISD6.7 CM2150, ISD6.7 CM2150 SN, QSB6.7 CM2250, QSB3.9-30 CM550, QSB5.9-30 CM550, B Gas Plus CM556, B6.7s, ISB CM2150, ISD4.5 CM2150 SN, ISB CM850, B LPG Plus CM556, B4.5, B3.9, ISF2.8 CM2220 AN, ISB6.7 CM2150 SN, QSB6.7 CM850, ISBe4 CM2150, G5.9 CM558, ISB6.7 CM2150 SQ, ISB4.5 CM2150 SN, ISB CM550, QSB5.9 CM850, B Gas International CM556, QSB4.5-30 CM550, ISBe CM800, ISBe5 CM2150 SN, QSB4.5 CM850, B5.9, ISBe CM850			

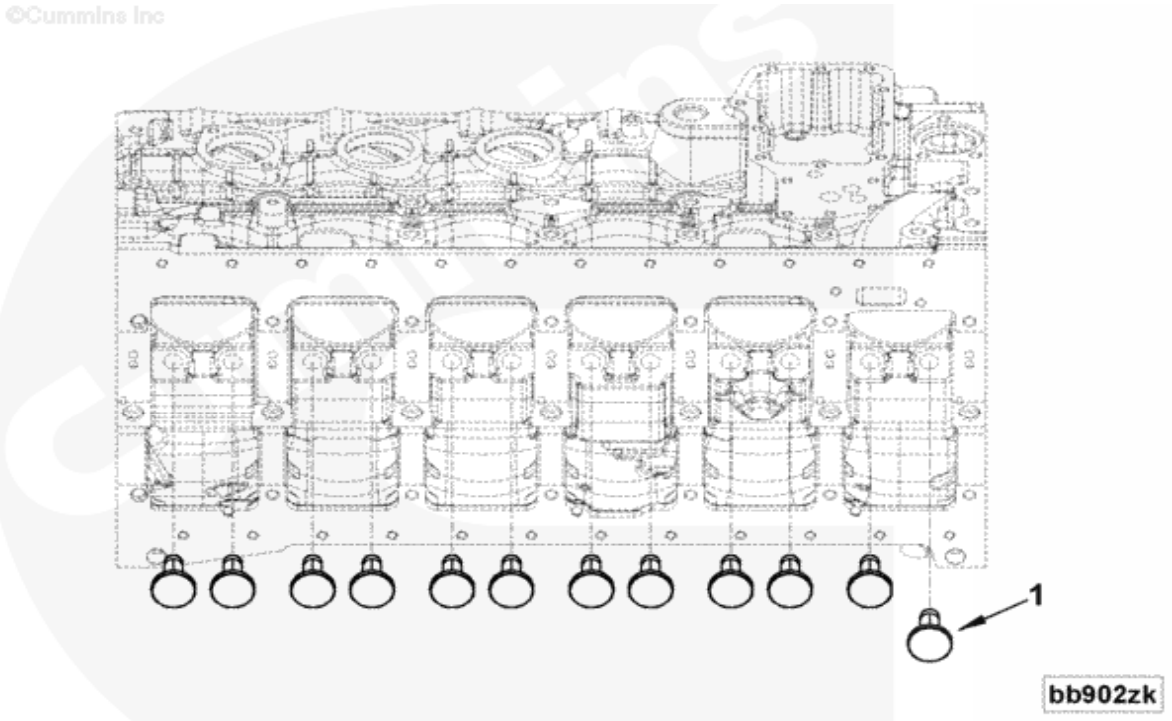

Ref No	Part Number	For-Sale	Shopping Cart	Part Name	Required	Remarks
	BB9206	NO		Valve Tappets		Valve Tappets
1	3947759	YES	ADD	Tappet, Valve	12	

VIBRATION DAMPER

Electronic Parts Catalog - Option Detail				
Option	Group	Graphic	Film Card	Date
DA9168-01	01.02.2	da952ge	T	13-Sep-04
Engines	ISD4.5 CM2150, B5.9 LPG Plus CM556, G5.9, ISB 5.9 G CM2180, B4.5s, ISF3.8 CM2220 AN, ISB6.7 CM2250, B4.5 RGT, ISB CM800, QSB5.9-44 CM550, B5.9 G, G3.9, ISBe4 CM850, ISD6.7 CM2150, ISD6.7 CM2150 SN, QSB6.7 CM2250, QSB3.9-30 CM550, QSB5.9-30 CM550, B Gas Plus CM556, B6.7s, ISB CM2150, ISD4.5 CM2150 SN, ISB CM850, B LPG Plus CM556, B4.5, B3.9, ISF2.8 CM2220 AN, ISB6.7 CM2150 SN, QSB6.7 CM850, ISBe4 CM2150, G5.9 CM558, ISB6.7 CM2150 SQ, ISB4.5 CM2150 SN, ISB CM550, QSB5.9 CM850, B Gas International CM556, QSB4.5-30 CM550, ISBe CM800, ISBe5 CM2150 SN, QSB4.5 CM850, B5.9, ISBe CM850			

©Cummins Inc

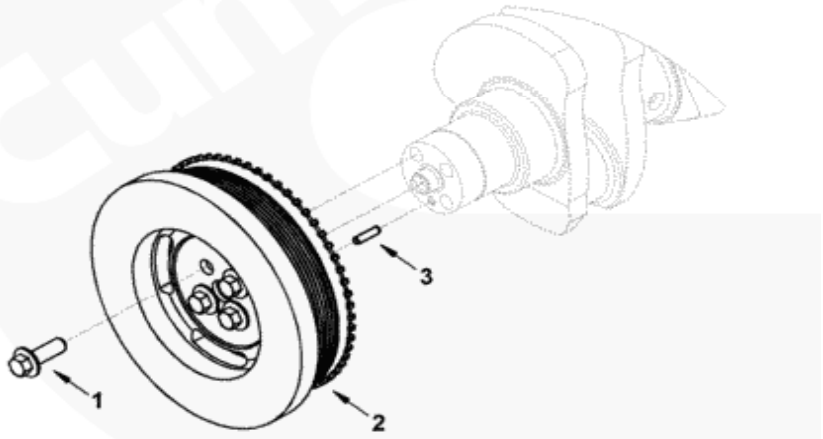

da952ge

Ref No	Part Number	For-Sale	Shopping Cart	Part Name	Required	Remarks
	DA9168-01	NO		Vibration Damper		Vibration Damper
1	3968075	YES	ADD	Screw, Captive Washer Cap	6	
2	3977785	YES	ADD	Damper, Vibration	1	
3	3955030	YES	ADD	Dowel, Pin	1	

WATER OUTLET CONNECTION

Electronic Parts Catalog - Option Detail				
Option	Group	Graphic	Film Card	Date
WO9064	08.07.1	wo900zf	T	18-Jun-01
Engines	ISD4.5 CM2150, B5.9 LPG Plus CM556, G5.9, ISB 5.9 G CM2180, B4.5s, ISF3.8 CM2220 AN, ISB6.7 CM2250, B4.5 RGT, ISB CM800, QSB5.9-44 CM550, B5.9 G, G3.9, ISBe4 CM850, ISD6.7 CM2150, ISD6.7 CM2150 SN, QSB6.7 CM2250, QSB3.9-30 CM550, QSB5.9-30 CM550, B Gas Plus CM556, B6.7s, ISB CM2150, ISD4.5 CM2150 SN, ISB CM850, B LPG Plus CM556, B4.5, B3.9, ISF2.8 CM2220 AN, ISB6.7 CM2150 SN, QSB6.7 CM850, ISBe4 CM2150, G5.9 CM558, ISB6.7 CM2150 SQ, ISB4.5 CM2150 SN, ISB CM550, QSB5.9 CM850, B Gas International CM556, QSB4.5-30 CM550, ISBe CM800, ISBe5 CM2150 SN, QSB4.5 CM850, B5.9, ISBe CM850			

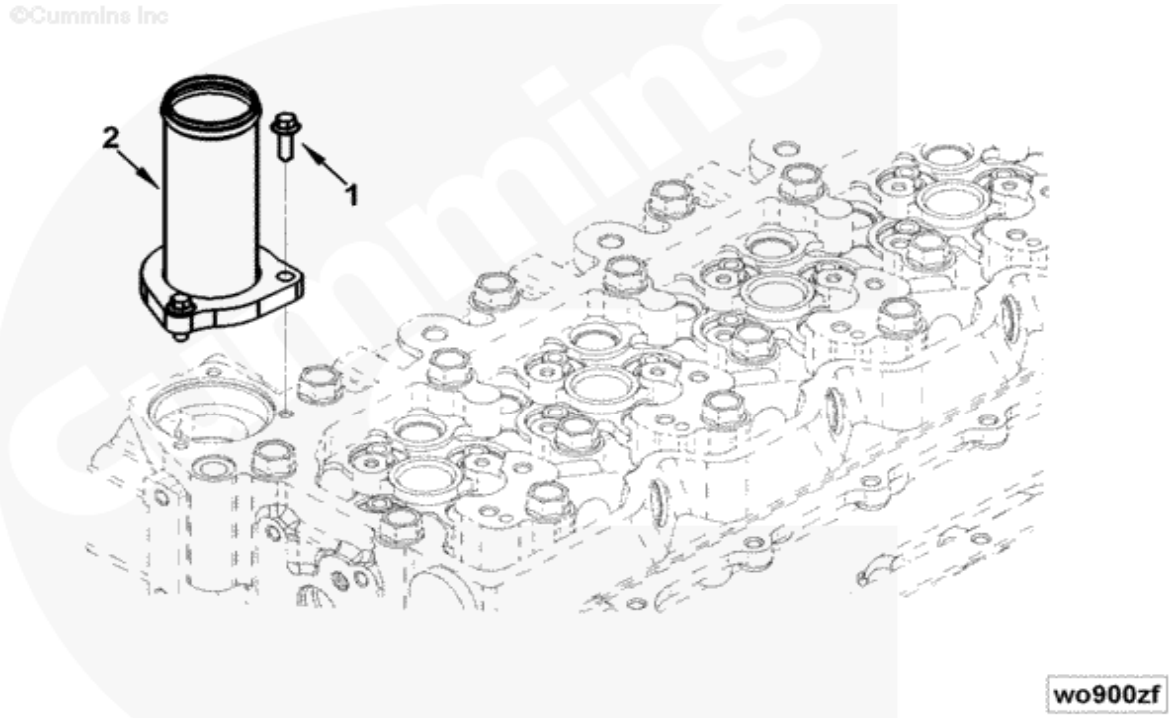

Ref No	Part Number	For-Sale	Shopping Cart	Part Name	Required	Remarks
	WO9064	NO		Water Outlet Connection		Water Outlet Connection
						Connection Orientation:
						Vertical
						Connection Outlet
						Diameter(mm): 44.4
						Connection Outlet Location
						From Coord Syst (mm):
						X: -103.0
						Y: 539.0
						Z: -30.5
						Fan Center Capability (mm):
						<= 444
1	3901865	YES	ADD	Screw, Hexagon Flange Head Cap	3	M6 X 1.00 X 20
2	3954918	YES	ADD	Connection, Water Outlet	1	

WATER PUMP DRIVE

Electronic Parts Catalog - Option Detail				
Option	Group	Graphic	Film Card	Date
WP9062	08.01	wp901zt	T	18-Sep-03
Engines	ISD4.5 CM2150, B5.9 LPG Plus CM556, G5.9, ISB 5.9 G CM2180, B4.5s, ISF3.8 CM2220 AN, ISB6.7 CM2250, B4.5 RGT, ISB CM800, QSB5.9-44 CM550, B5.9 G, G3.9, ISBe4 CM850, ISD6.7 CM2150, ISD6.7 CM2150 SN, QSB6.7 CM2250, QSB3.9-30 CM550, QSB5.9-30 CM550, B Gas Plus CM556, B6.7s, ISB CM2150, ISD4.5 CM2150 SN, ISB CM850, B LPG Plus CM556, B4.5, B3.9, ISF2.8 CM2220 AN, ISB6.7 CM2150 SN, QSB6.7 CM850, ISBe4 CM2150, G5.9 CM558, ISB6.7 CM2150 SQ, ISB4.5 CM2150 SN, ISB CM550, QSB5.9 CM850, B Gas International CM556, QSB4.5-30 CM550, ISBe CM800, ISBe5 CM2150 SN, QSB4.5 CM850, B5.9, ISBe CM850			

©Cummins Inc



wp901zt

Ref No	Part Number	For-Sale	Shopping Cart	Part Name	Required	Remarks
	WP9062	NO		Water Pump Drive		Water Pump Drive
						Engine Family: "B" Series
						Tensioner Mounting Location
						(mm):
						X: -227.0 Y: 195.0
						Alternator Center (mm):
						X: -288.0 Y: 339.2
						Alternator Pulley Diameter

						(mm): 61.13
						Engine Fan Center (mm):
						X: 0 Y: 345.0
						Fan Pulley Diameter (mm):
						159.13
						Belt Length (mm): 1828.8
						Damper Pulley Effective
						Diameter (mm): 173.76
1	3289448	YES	ADD	Belt, V Ribbed	1	