Parts Catalog - Option Detail

Electronic Parts Catalog - Option Detail				
Option	**Group**	**Graphic**	**Film Card**	**Date**
AD2056	09.03	ad201gt	II	22-FEB-96
Engines	ISM CM570, ISM CM570/870, ISM CM875, ISM CM876, ISM CM876 E, ISM11 CM876 M103, ISM11 CM876 SN, M11 CELECT, M11 CELECT PLUS, M11 MECHANICAL, QSM11 CM570, QSM11 CM876			

SMALL | MEDIUM | LARGE

Cart	Ref No	Part Number	Part Description	Required	Remarks
View My Cart					
		AD2056	Accessory Drive Pulley		
					Accessory Drive Pulley
					Intended Drive: Alternator
					Pulley Rotation: Same as
					Engine Crankshaft
					Horsepower Drive Limitation
					(HP): 20
					Side Load Limitation (LB):
					360
					Pulley Diameter(mm): 185.00
					Pulley Groove: Poly V 5 Rib
					"K"
					Drive Ratio: Turns at Engine
					Speed
					Use on Fuel Pump Side (Left
					Side) of Engine. Front Face
					of Pulley is Machined to
					Mount
					Additional Customer Supplied

					Pulley
☐	1	3255818	Accessory Drive Pulley	1	
☐	2	3818229	Hexagon Head Cap Screw	1	M20 x 2.50 x 50
☐	3	3818463	Plain Washer	1	M20

© 2019 Cummins Inc., Box 3005, Columbus, IN 47202-3005 U.S.A.
Terms of Use and Disclaimers | Recommended System Requirements
Need Assistance? Please click on the Contact Us button in the top right corner of any page.

Parts Catalog - Option Detail

Electronic Parts Catalog - Option Detail				
Option	**Group**	**Graphic**	**Film Card**	**Date**
AC2033-03	10.04	ac201gm	II	06-APR-03
Engines	ISM CM570, ISM CM570/870, ISM CM875, ISM CM876, ISM CM876 E, ISM11 CM876 M103, ISM11 CM876 SN, M11 CELECT, M11 CELECT PLUS, M11 MECHANICAL, QSM11 CM570, QSM11 CM876			

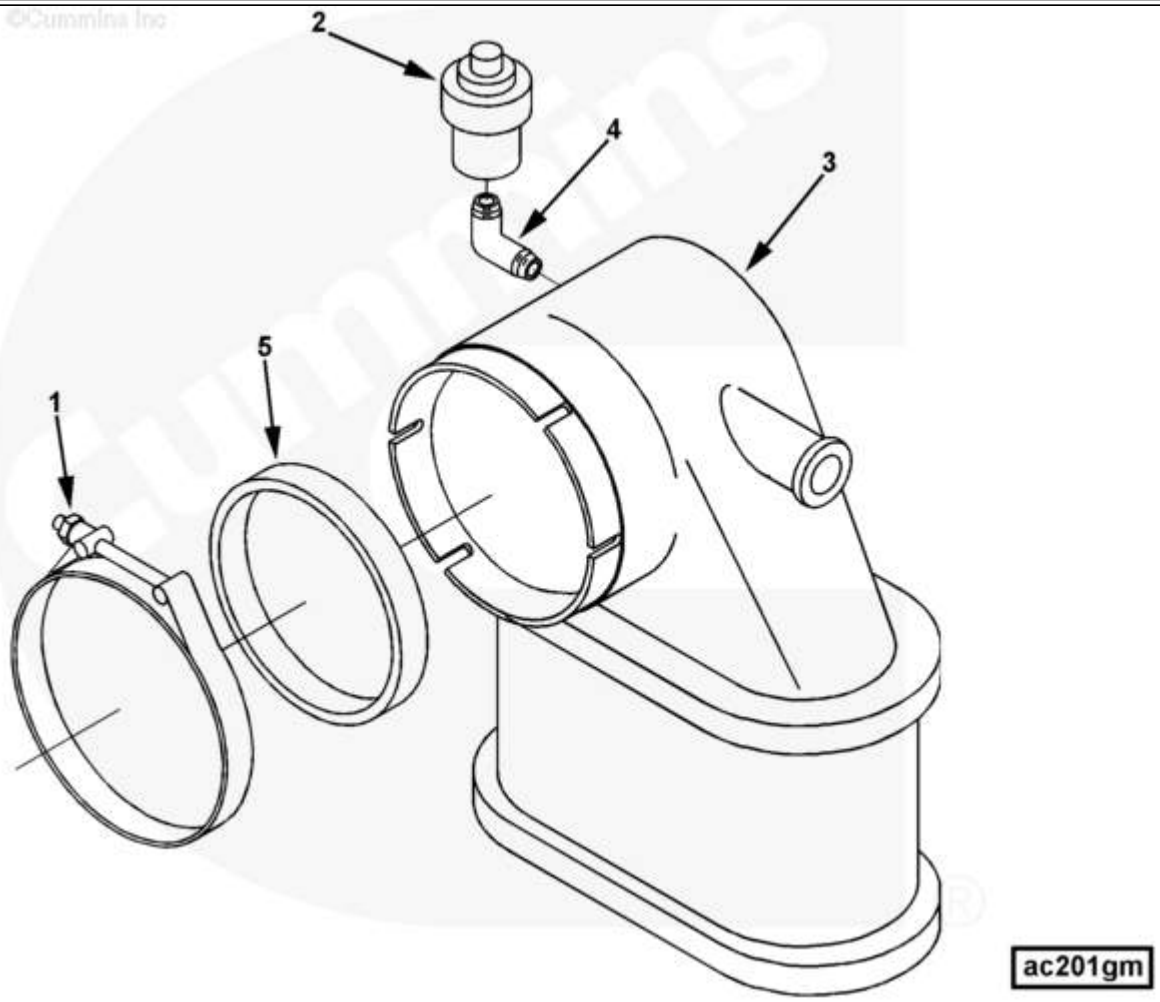

SMALL | MEDIUM | LARGE

Cart	Ref No	Part Number	Part Description	Required	Remarks
View My Cart					
		AC2033-03	Air Cleaner		
					Air Cleaner
					Air Cleaner Supplier:
					Cummins

					Manuf/Model: Racor
					Must Use W/Closed Crankcase
					Breather System
					Duty Rating: Heavy
					Mtg Brkt Supply Method:
					Mounted
					Mtg Brkt Loc: Above Flywheel
					Housing
					Plumbing Supplier: Cummins
					Filter Disposition:
					Disposable
					Includes Conn Provision:
					Closed Crankcase Breather
					System, Restriction Indicator
☐	1	3040878	T-Bolt Clamp	1	5 3/4 inch
		4070041	Air Cleaner	1	
☐	2	C0140200800	Restriction Indicator	1	
☐	3	4070042	Air Cleaner	1	
☐	4	4070044	Male Adapter Elbow	1	1/8 NPTF x 1/8 NPTF (90 deg)
☐	5	3959072	Dust Seal	1	
☐		4089303	Air Cleaner Assembly Kit	1	
☐		3959072	Dust Seal	1	
☐		4070042	Air Cleaner	1	

© 2019 Cummins Inc., Box 3005, Columbus, IN 47202-3005 U.S.A.
Terms of Use and Disclaimers | Recommended System Requirements
Need Assistance? Please click on the Contact Us button in the top right corner of any page.

Parts Catalog - Option Detail

Electronic Parts Catalog - Option Detail				
Option	**Group**	**Graphic**	**Film Card**	**Date**
PP8363	12.01.1	fe200gb	II	30-AUG-02
Engines	ISM CM570, ISM CM570/870, ISM CM875, ISM CM876, ISM CM876 E, ISM11 CM876 M103, ISM11 CM876 SN, M11 CELECT, M11 CELECT PLUS, M11 MECHANICAL, QSM11 CM570, QSM11 CM876			

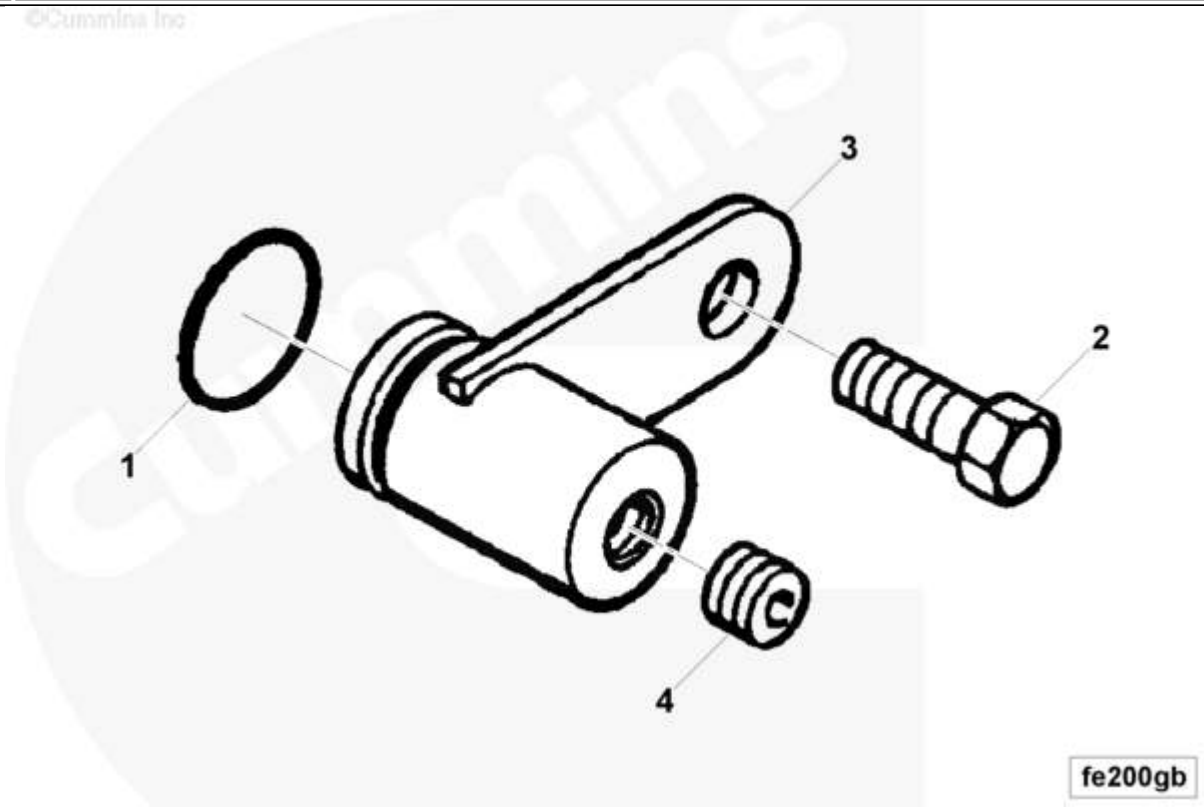

SMALL | MEDIUM | LARGE

Cart	Ref No	Part Number	Part Description	Required	Remarks
View My Cart					
		PP8363	Air Intake Connection		
					Air Intake Connection
☐	1	3819871	O-Ring Seal	1	
☐	2	3036230	Hexagon Head Cap Screw	1	M10 x 1.50 x 20
☐	3	3600825	Air Intake Connection	1	
☐	4	3008465	Pipe Plug	1	1/8 NPT

© 2019 Cummins Inc., Box 3005, Columbus, IN 47202-3005 U.S.A.
Terms of Use and Disclaimers | Recommended System Requirements
Need Assistance? Please click on the Contact Us button in the top right corner of any page.

Parts Catalog - Option Detail

Electronic Parts Catalog - Option Detail				
Option	**Group**	**Graphic**	**Film Card**	**Date**
PP8363-01	12.01.1	fe200gb	II	21-MAR-05
Engines	ISM CM570, ISM CM570/870, ISM CM875, ISM CM876, ISM CM876 E, ISM11 CM876 M103, ISM11 CM876 SN, M11 CELECT, M11 CELECT PLUS, M11 MECHANICAL, QSM11 CM570, QSM11 CM876			

©Cummins Inc

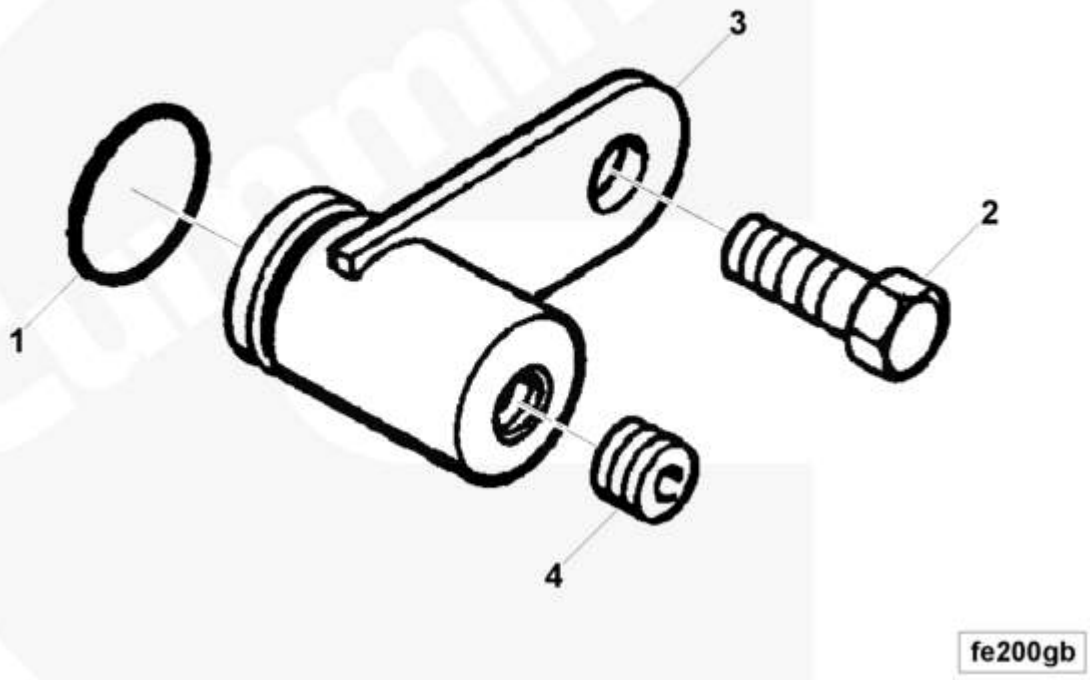

SMALL | MEDIUM | LARGE

Cart	Ref No	Part Number	Part Description	Required	Remarks
View My Cart					
		PP8363-01	Air Intake Connection		
					Air Intake Connection
☐	1	3819871	O-Ring Seal	1	
☐	2	3036230	Hexagon Head Cap Screw	1	M10 x 1.50 x 20
☐	3	3600825	Air Intake Connection	1	
	4	3008465	Pipe Plug	1	1/8 NPT

☐					

© 2019 Cummins Inc., Box 3005, Columbus, IN 47202-3005 U.S.A.
Terms of Use and Disclaimers | Recommended System Requirements
Need Assistance? Please click on the Contact Us button in the top right corner of any page.

Parts Catalog - Option Detail

Electronic Parts Catalog - Option Detail				
Option	**Group**	**Graphic**	**Film Card**	**Date**
EH2715-04	13.02.1	eh205ga	II	29-APR-03
Engines	ISM CM570, ISM CM570/870, ISM CM875, ISM CM876, ISM CM876 E, ISM11 CM876 M103, ISM11 CM876 SN, M11 CELECT, M11 CELECT PLUS, M11 MECHANICAL, QSM11 CM570, QSM11 CM876			

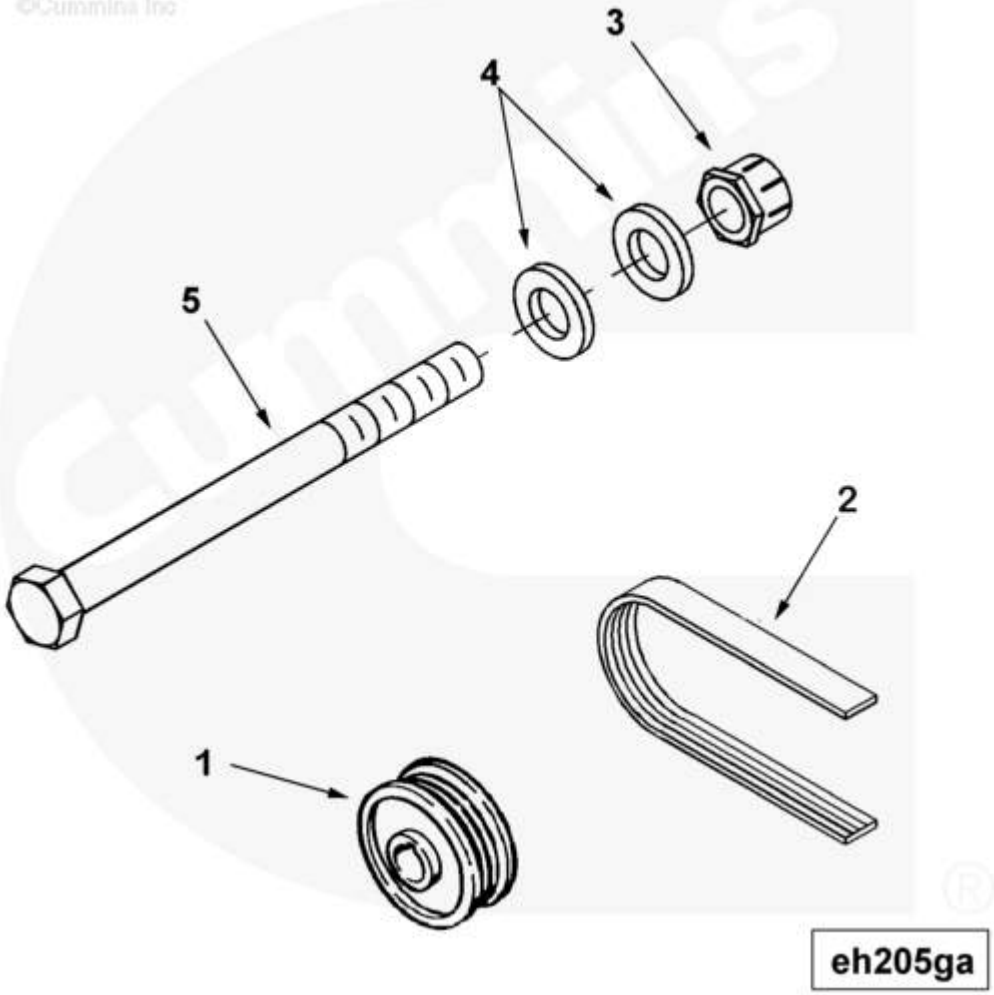

SMALL | MEDIUM | LARGE

Cart	Ref No	Part Number	Part Description	Required	Remarks
View My Cart					
		EH2715-04	Alternator Drive Pulley		
					Alternator Drive Pulley
					Pulley Quantity: One
					Alt/Manuf: Delco Remy or

					Leece Neville
					Alt Pulley Groove: Poly V 5
					Rib "K"
					Alt Pulley Dia: 61.13mm
					61.13
					Alternator Pulley Supplied:
					On Engine
					Effective Belt Length: 34
					Mounting Hardware Supplied:
					On Engine
					Alt Belt Supplied: On
					Engine
☐	1	3349539	Alternator Pulley	1	
☐	2	3028521	V Ribbed Belt	1	
☐	3	70897	Lock Nut	1	1/2 - 20 UNF
☐	4	3895517	Plain Washer	2	1 inch
☐	5	4022822	Hexagon Head Cap Screw	1	1/2 - 20 x 6 1/2 inch

© 2019 Cummins Inc., Box 3005, Columbus, IN 47202-3005 U.S.A.
Terms of Use and Disclaimers | Recommended System Requirements
Need Assistance? Please click on the Contact Us button in the top right corner of any page.

Parts Catalog - Option Detail

Electronic Parts Catalog - Option Detail				
Option	**Group**	**Graphic**	**Film Card**	**Date**
EE2071	13.02	ee200gu	II	13-DEC-04
Engines	ISM CM570, ISM CM570/870, ISM CM875, ISM CM876, ISM CM876 E, ISM11 CM876 M103, ISM11 CM876 SN, M11 CELECT, M11 CELECT PLUS, M11 MECHANICAL, QSM11 CM570, QSM11 CM876			

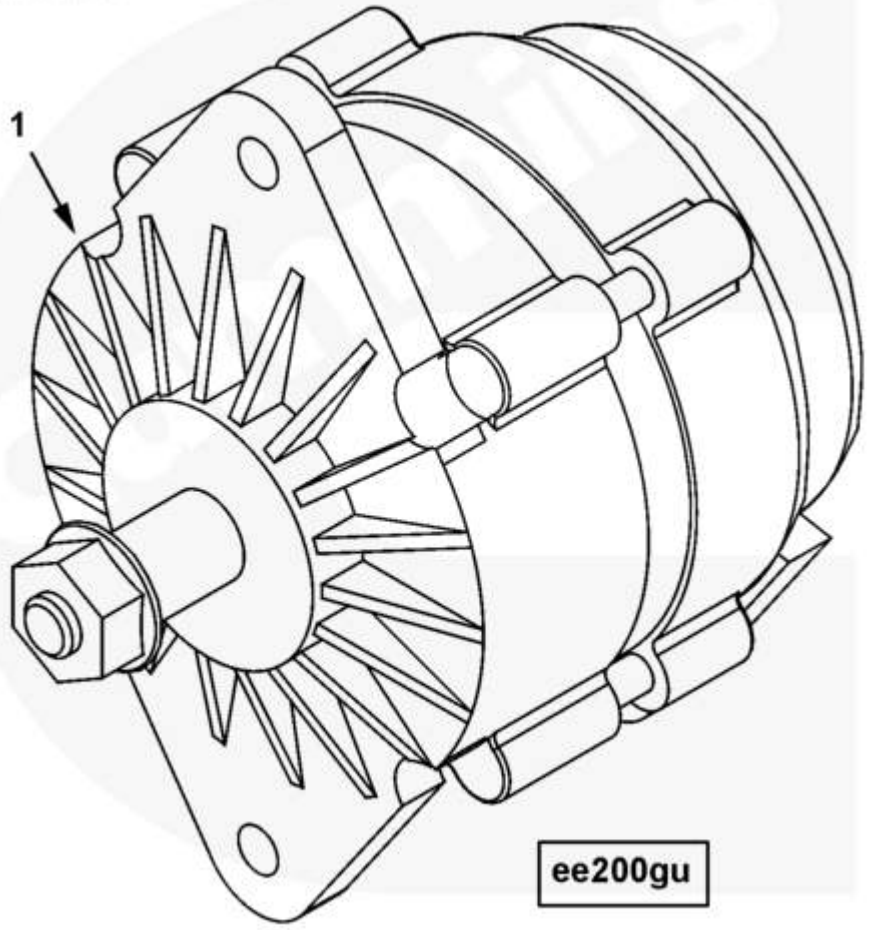

SMALL | MEDIUM | LARGE

Cart	Ref No	Part Number	Part Description	Required	Remarks
View My Cart					
		EE2071	Alternator		
					Alternator
					Quantity: One
					Manufacturer/Model/Type:

					Delco Remy 24 SI375
					Volts: 12
					Amps: 160
					Alternator Grounding
					Provision: Frame Ground Only
					Sealing Provision: No
					Ground Wire Supplier:
					Customer
					Alternator Length:
					234mm (9.21 in.)
					Charging System: 1 Wire
					Battery Terminal:
					5/16 D, R, or P
					Terminal: Packard Metripack
					Terminal 1 or 1
					Terminal:
					Packard Metripack Terminal
					Cummins Branded: Yes
					Alternator Mounting Style: 4
					Inch Double Lug
					Alternator Cooling: Dual
					Internal Fan
					Voltage Regulator: Built In.
☐	1	3972734	Alternator	1	

© 2019 Cummins Inc., Box 3005, Columbus, IN 47202-3005 U.S.A.
Terms of Use and Disclaimers | Recommended System Requirements
Need Assistance? Please click on the Contact Us button in the top right corner of any page.

Parts Catalog - Option Detail

Electronic Parts Catalog - Option Detail				
Option	**Group**	**Graphic**	**Film Card**	**Date**
EH2137-06	13.02.3	eh205gn	II	29-JUL-03
Engines	ISM CM570, ISM CM570/870, ISM CM875, ISM CM876, ISM CM876 E, ISM11 CM876 M103, ISM11 CM876 SN, M11 CELECT, M11 CELECT PLUS, M11 MECHANICAL, QSM11 CM570, QSM11 CM876			

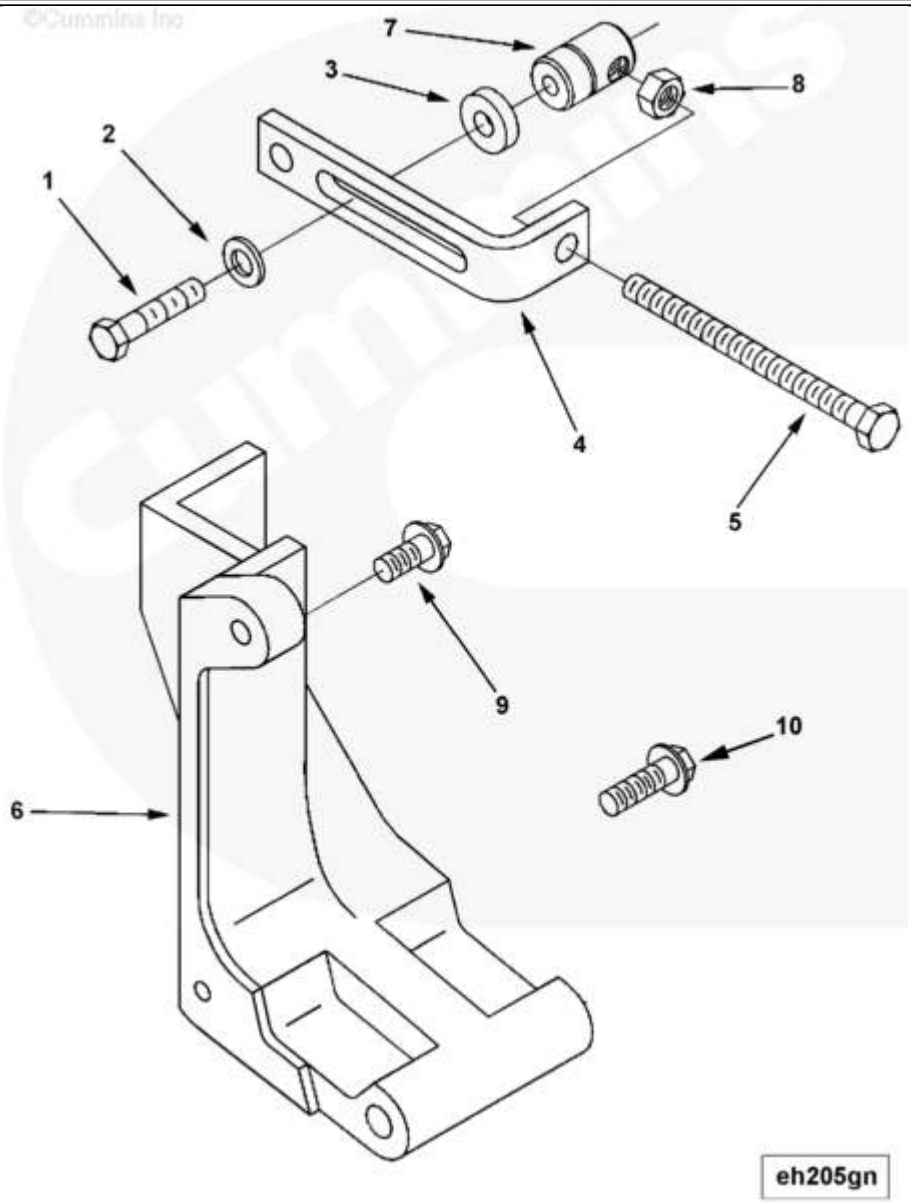

SMALL | MEDIUM | LARGE

Cart	Ref No	Part Number	Part Description	Required	Remarks
View My Cart					
		EH2137-06	Alternator Mounting		

					Alternator Mounting
					Alternator Quantity: One
					Manuf: Delco Remy or Leece
					Neville
					Belt Tensioner: Manual
					Mtg Location: Left Side
					Alt Pulley Groove: Poly V
					5 Rib "K"
					Acc Drive Pulley Dia: 185.00m
					(7.28")
					Alt Pulley Dia: 61.13mm
					(2.41")
					Bracket Attachment Method:
					Spool
					Horiz Attachment Point: 391mm
					(15.39")
					Vertical Attachment Point:
					280mm (11.02")
					Reference Point From FFOB:
					84mm (3.31")
					Alternator Pulley Supplied:
					Cummins
					Alt Drive Belt Supplied:
					Cummins
					Effective Belt Length:
					876.3mm (34.5")
					Alternator Mtg Brkt Supplied:
					On Engine
					Adjusting Link Supplied: On

					Engine
					Alternator Drive Speed:
					3.026
					EH Alt Pulley Structure
					Logic: In EH Dependent
					Option
☐	1	S 120	Hexagon Head Cap Screw	1	3/8 - 16 X 1 3/4 in.
☐	2	108330	Plain Washer	1	3/8 in.
☐	3	3029507	Mounting Spacer	1	
☐	4	3255840	Adjusting Link	1	
☐	5	3255842	Hexagon Head Cap Screw	1	
☐	6	3349637	Alternator Bracket	1	
☐	7	3820876	Adjusting Screw Retainer	1	
☐	8	3895300	Regular Hexagon Nut	1	
☐	9	3902460	Hexagon Flange Head Cap Screw	4	M10 X 1.50 X 25.
☐	10	3892692	Captive Washer Cap Screw	1	

© 2019 Cummins Inc., Box 3005, Columbus, IN 47202-3005 U.S.A.
Terms of Use and Disclaimers | Recommended System Requirements
Need Assistance? Please click on the Contact Us button in the top right corner of any page.

Parts Catalog - Option Detail

Electronic Parts Catalog - Option Detail				
Option	**Group**	**Graphic**	**Film Card**	**Date**
SC20480	99.01	null	II	08-OCT-17
Engines	ISM CM570, ISM CM570/870, ISM CM875, ISM CM876, ISM CM876 E, ISM11 CM876 SN, M11 CELECT, M11 CELECT PLUS, M11 MECHANICAL, QSM11 CM570, QSM11 CM876			

Cart	Ref No	Part Number	Part Description	Required	Remarks
View My Cart					
		SC20480	Calibration Software		Software calibration...(More)
					CPL: 8363
					Engine Control System: Dei
					Certified By: EPA , Imo , Eu
					Application: Marine
					Power Rating: High Output
					ECM version: CM series
					comment: Phase 4.11 cal
					restr: None pw: 02133 FR:
					02970
					Advertised Power: 0660 BHP
					At 2300 RPM
					Peak torque: 1675 FT LB at
					1700 RPM
					Governed Power: 0660 BHP At
					2300 RPM cert level: Marpol,
					rcd
					Calibration Voltage: N/A.

© 2019 Cummins Inc., Box 3005, Columbus, IN 47202-3005 U.S.A.
Terms of Use and Disclaimers | Recommended System Requirements
Need Assistance? Please click on the Contact Us button in the top right corner of any page.

Parts Catalog - Option Detail

Electronic Parts Catalog - Option Detail				
Option	**Group**	**Graphic**	**Film Card**	**Date**
SC20480	99.01	null	II	09-JUN-18
Engines	ISM CM570, ISM CM570/870, ISM CM875, ISM CM876, ISM CM876 E, ISM11 CM876 M103, ISM11 CM876 SN, M11 CELECT, M11 CELECT PLUS, M11 MECHANICAL, QSM11 CM570, QSM11 CM876			

Cart	Ref No	Part Number	Part Description	Required	Remarks
View My Cart					
		SC20480	Calibration Software		Software calibration...(More)
					CPL: 8363
					Engine Control System: Dei
					Certified By: EPA , Imo , Eu
					Application: Marine
					Power Rating: High Output
					ECM version: CM series
					comment: Phase 4.11 cal
					restr: None pw: 02133 FR:
					02970
					Advertised Power: 0660 BHP
					At 2300 RPM
					Peak torque: 1675 FT LB at
					1700 RPM
					Governed Power: 0660 BHP At
					2300 RPM cert level: Marpol,
					rcd
					Calibration Voltage: N/A.

© 2019 Cummins Inc., Box 3005, Columbus, IN 47202-3005 U.S.A.
Terms of Use and Disclaimers | Recommended System Requirements
Need Assistance? Please click on the Contact Us button in the top right corner of any page.

Parts Catalog - Option Detail

Electronic Parts Catalog - Option Detail				
Option	**Group**	**Graphic**	**Film Card**	**Date**
BB2762-04	04.01	bb200gj	II	23-DEC-03
Engines	ISM CM570, ISM CM570/870, ISM CM875, ISM CM876, ISM CM876 E, ISM11 CM876 M103, ISM11 CM876 SN, M11 CELECT, M11 CELECT PLUS, M11 MECHANICAL, QSM11 CM570, QSM11 CM876			

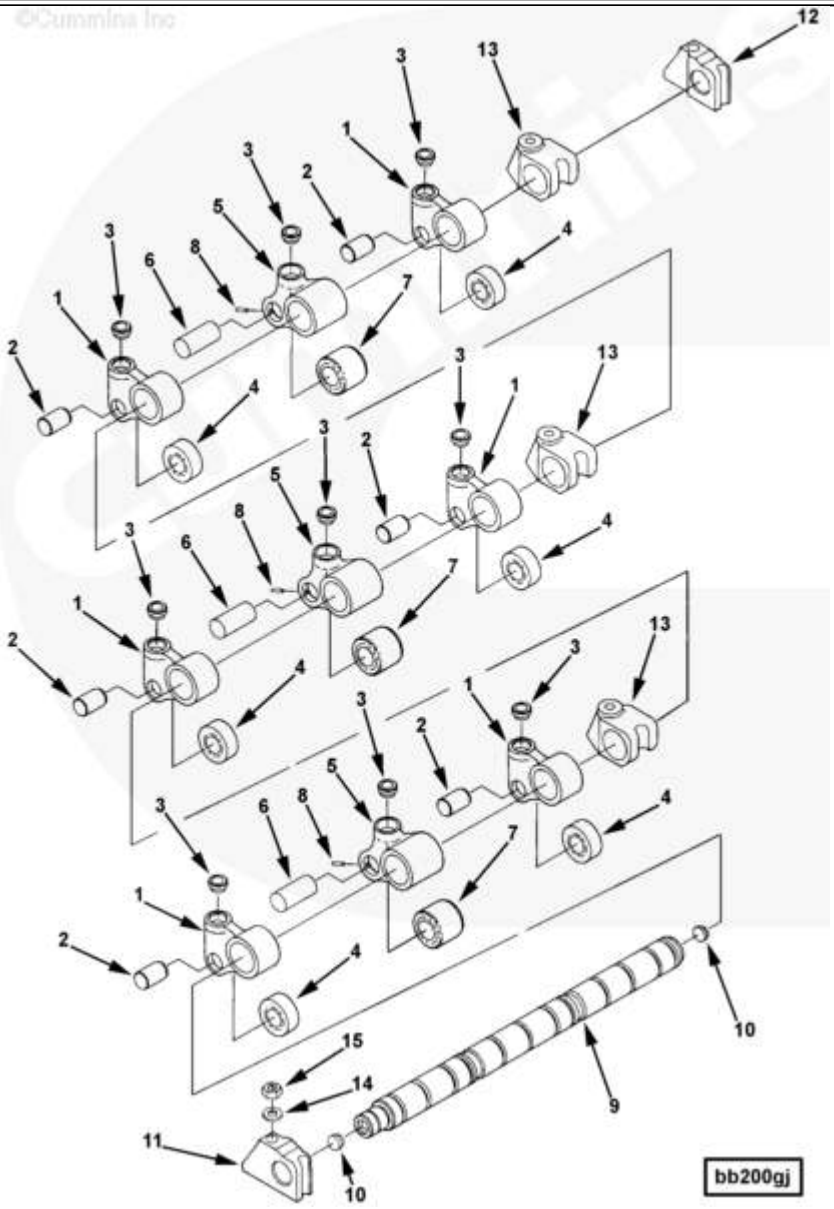

SMALL | MEDIUM | LARGE

Cart	Ref No	Part Number	Part Description	Required	Remarks
View My Cart					
		BB2762-04	Cam Follower		Cam Follower

☐		3161475	Cam Follower Lever	12	Valve.
	1	3821160	Cam Follower Lever	1	
☐	2	3335342	Cam Follower Roller Pin	1	
☐	3	3064621	Tappet Socket	1	
☐	4	3895488	Cam Follower Roller	1	
☐		3417645	Cam Follower Lever	6	Injector.
	5	3079589	Cam Follower Lever	1	
☐	6	3335343	Cam Follower Roller Pin	1	
☐	3	3064621	Tappet Socket	1	
☐	7	3161423	Cam Follower Roller	1	
☐	8	3029920	Roll Pin	1	
☐		3417766	Cam Follower Shaft	2	
	9	3417769	Cam Follower Shaft	1	
☐	10	4060455	Expansion Plug	2	
☐	11	3064582	Cam Follower Shaft Support	1	
☐	12	3064583	Cam Follower Shaft Support	1	
☐	13	3895830	Cam Follower Shaft Support	5	
☐	14	3009330	Plain Washer	7	M10.
☐	15	3044360	Regular Hexagon Nut	7	M10 X 1.50.

© 2019 Cummins Inc., Box 3005, Columbus, IN 47202-3005 U.S.A.
Terms of Use and Disclaimers | Recommended System Requirements
Need Assistance? Please click on the Contact Us button in the top right corner of any page.

Parts Catalog - Option Detail

Electronic Parts Catalog - Option Detail				
Option	**Group**	**Graphic**	**Film Card**	**Date**
BB2762-04	04.01	bb200gj	II	23-DEC-03
Engines	ISM CM570, ISM CM570/870, ISM CM875, ISM CM876, ISM CM876 E, ISM11 CM876 M103, ISM11 CM876 SN, M11 CELECT, M11 CELECT PLUS, M11 MECHANICAL, QSM11 CM570, QSM11 CM876			

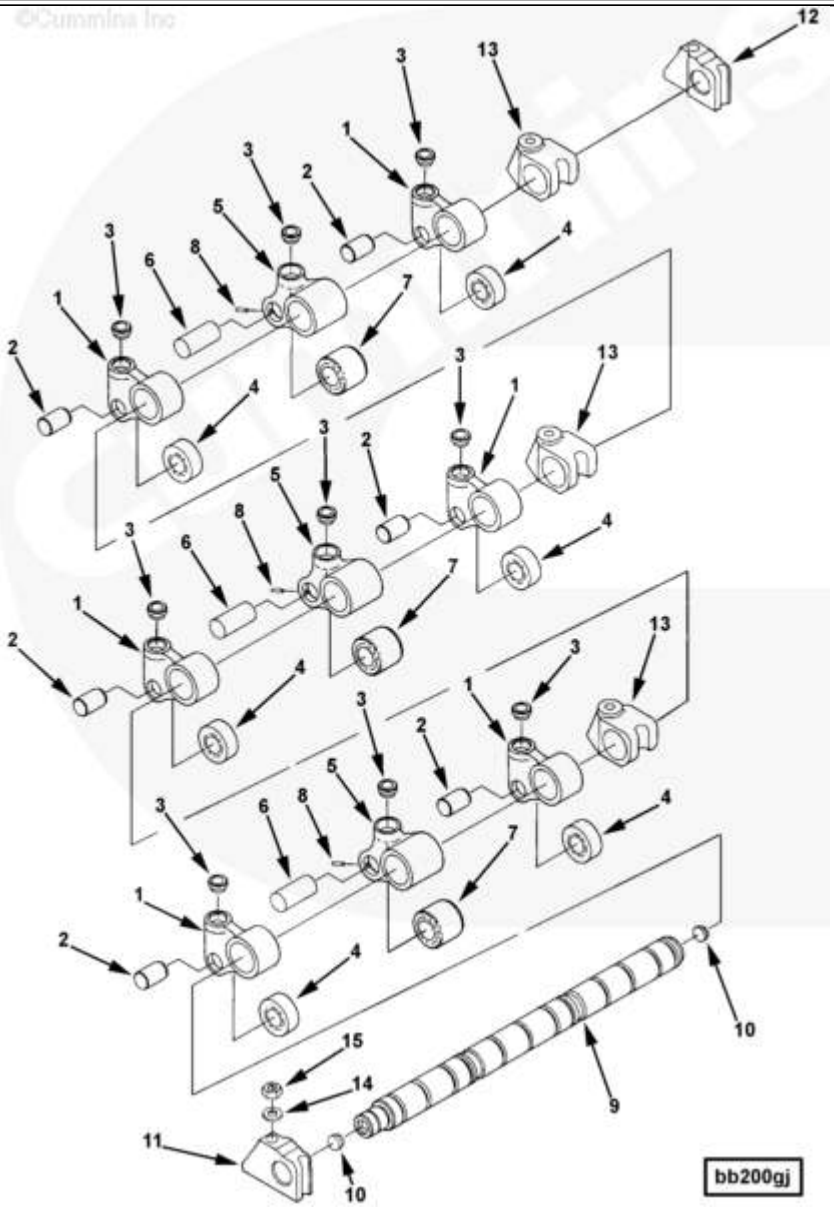

SMALL | MEDIUM | LARGE

Cart	Ref No	Part Number	Part Description	Required	Remarks
View My Cart					
		BB2762-04	Cam Follower		Cam Follower

☐		3161475	Cam Follower Lever	12	Valve.
	1	3821160	Cam Follower Lever	1	
☐	2	3335342	Cam Follower Roller Pin	1	
☐	3	3064621	Tappet Socket	1	
☐	4	3895488	Cam Follower Roller	1	
☐		3417645	Cam Follower Lever	6	Injector.
	5	3079589	Cam Follower Lever	1	
☐	6	3335343	Cam Follower Roller Pin	1	
☐	3	3064621	Tappet Socket	1	
☐	7	3161423	Cam Follower Roller	1	
☐	8	3029920	Roll Pin	1	
☐		3417766	Cam Follower Shaft	2	
	9	3417769	Cam Follower Shaft	1	
☐	10	4060455	Expansion Plug	2	
☐	11	3064582	Cam Follower Shaft Support	1	
☐	12	3064583	Cam Follower Shaft Support	1	
☐	13	3895830	Cam Follower Shaft Support	5	
☐	14	3009330	Plain Washer	7	M10.
☐	15	3044360	Regular Hexagon Nut	7	M10 X 1.50.

© 2019 Cummins Inc., Box 3005, Columbus, IN 47202-3005 U.S.A.
Terms of Use and Disclaimers | Recommended System Requirements
Need Assistance? Please click on the Contact Us button in the top right corner of any page.

Parts Catalog - Option Detail

Electronic Parts Catalog - Option Detail				
Option	**Group**	**Graphic**	**Film Card**	**Date**
PP8363	01.07	cg200gd	II	30-AUG-02
Engines	ISM CM570, ISM CM570/870, ISM CM875, ISM CM876, ISM CM876 E, ISM11 CM876 M103, ISM11 CM876 SN, M11 CELECT, M11 CELECT PLUS, M11 MECHANICAL, QSM11 CM570, QSM11 CM876			

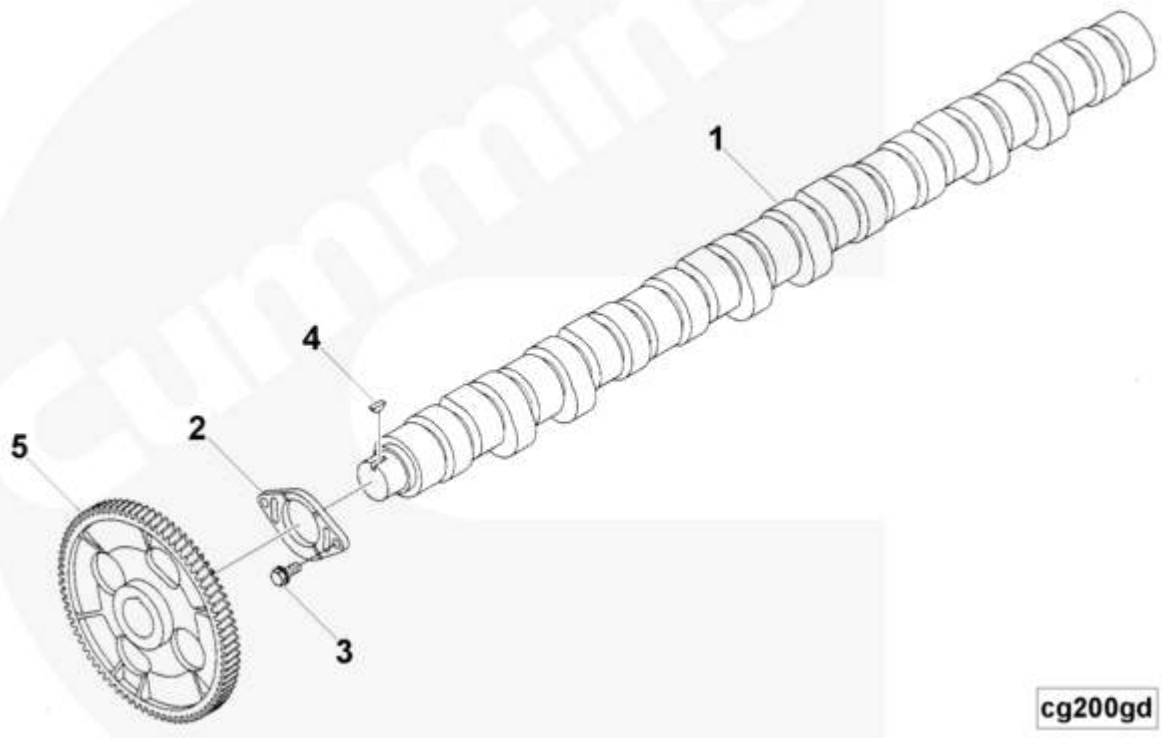

SMALL | MEDIUM | LARGE

Cart	Ref No	Part Number	Part Description	Required	Remarks
View My Cart					
		PP8363	Camshaft		
					Camshaft
☐	1	4083012	Camshaft	1	
☐	2	3896335	Camshaft Thrust Support	1	
☐	3	3822067	Captive Washer Cap Screw	2	M10 x 1.50 x 25
☐	4	3009953	Plain Woodruff Key	1	

☐	5	3401439	Camshaft Gear	1	

© 2019 Cummins Inc., Box 3005, Columbus, IN 47202-3005 U.S.A.
Terms of Use and Disclaimers | Recommended System Requirements
Need Assistance? Please click on the Contact Us button in the top right corner of any page.

Parts Catalog - Option Detail

Electronic Parts Catalog - Option Detail				
Option	**Group**	**Graphic**	**Film Card**	**Date**
PP8363-01	01.07	cg200gd	II	21-MAR-05
Engines	ISM CM570, ISM CM570/870, ISM CM875, ISM CM876, ISM CM876 E, ISM11 CM876 M103, ISM11 CM876 SN, M11 CELECT, M11 CELECT PLUS, M11 MECHANICAL, QSM11 CM570, QSM11 CM876			

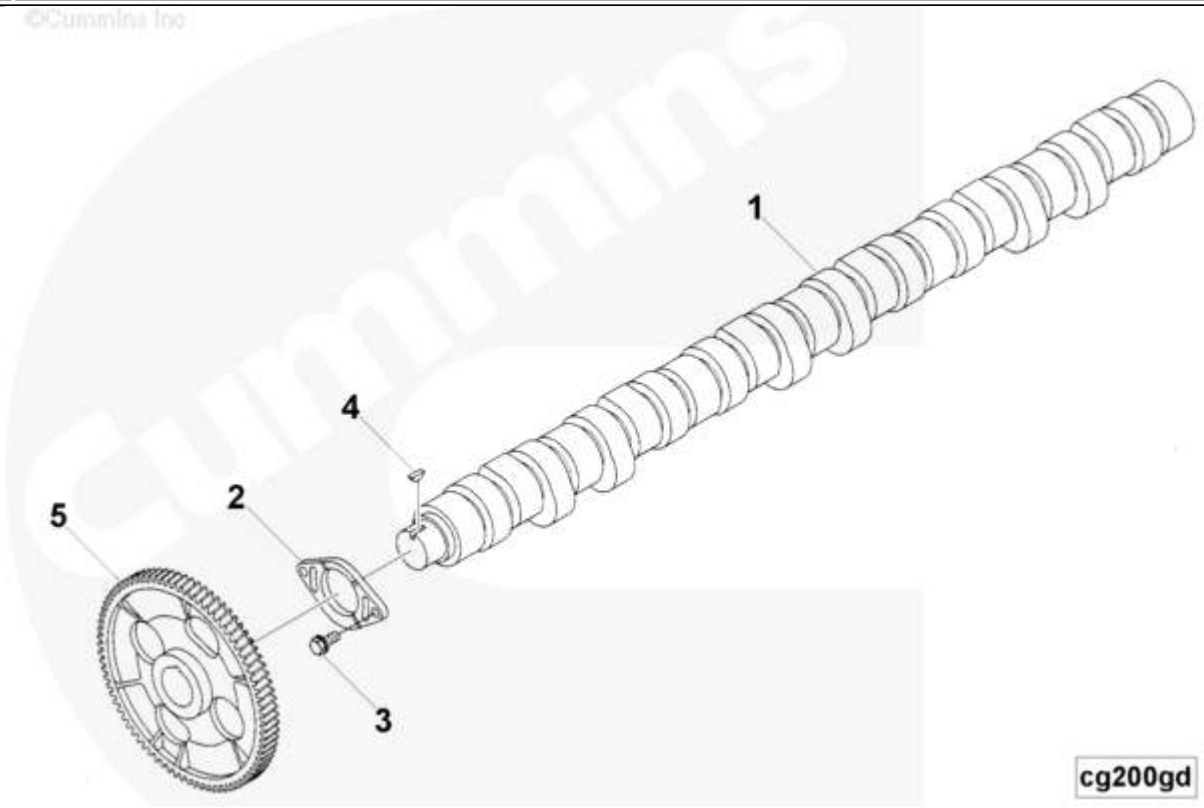

SMALL | MEDIUM | LARGE

Cart	Ref No	Part Number	Part Description	Required	Remarks
View My Cart					
		PP8363-01	Camshaft		
					Camshaft
☐	1	4083012	Camshaft	1	
☐	2	3896335	Camshaft Thrust Support	1	
☐	3	3822067	Captive Washer Cap Screw	2	M10 x 1.50 x 25
	4	3009953	Plain Woodruff Key	1	

☐					
☐	5	3401439	Camshaft Gear	1	

© 2019 Cummins Inc., Box 3005, Columbus, IN 47202-3005 U.S.A.
Terms of Use and Disclaimers | Recommended System Requirements
Need Assistance? Please click on the Contact Us button in the top right corner of any page.

Parts Catalog - Option Detail

Electronic Parts Catalog - Option Detail				
Option	**Group**	**Graphic**	**Film Card**	**Date**
PP8363	01.04	cx200gh	II	30-AUG-02
Engines	ISM CM570, ISM CM570/870, ISM CM875, ISM CM876, ISM CM876 E, ISM11 CM876 M103, ISM11 CM876 SN, M11 CELECT, M11 CELECT PLUS, M11 MECHANICAL, QSM11 CM570, QSM11 CM876			

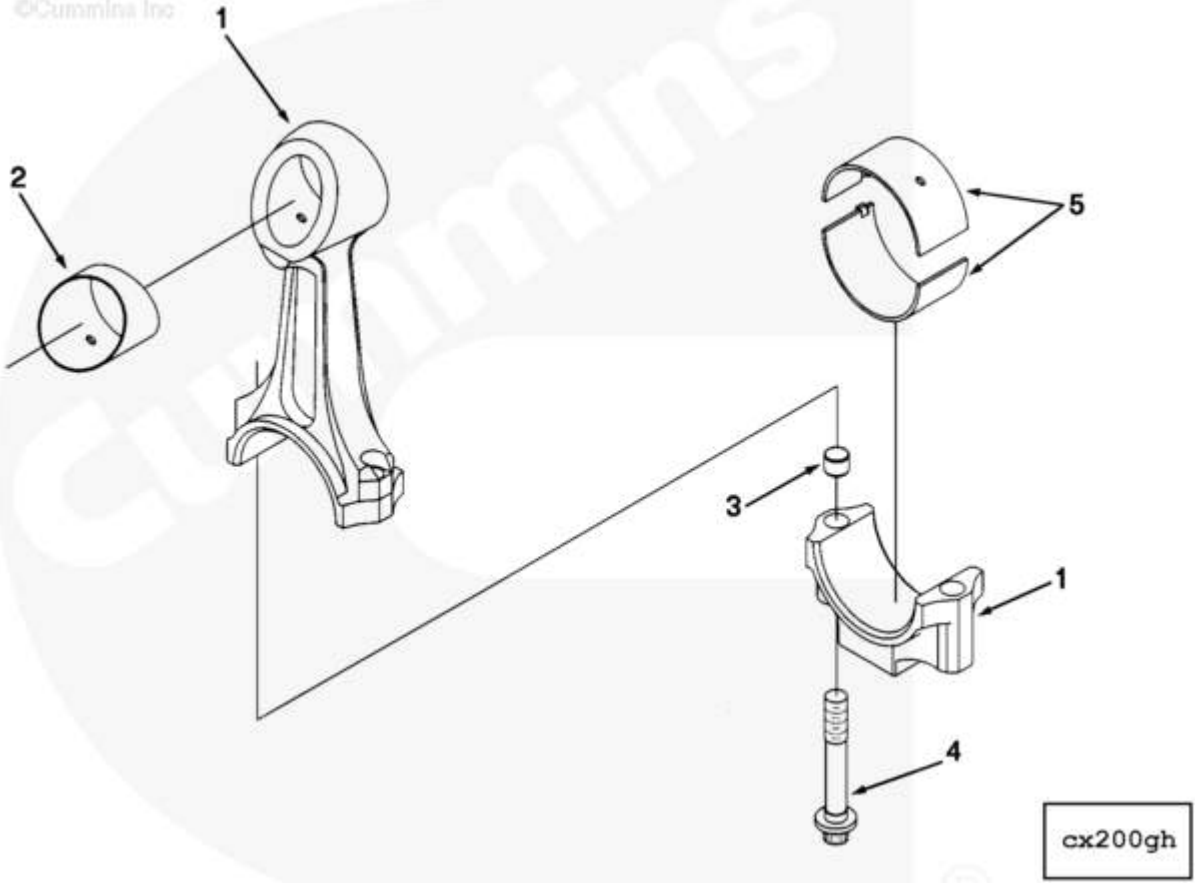

SMALL | MEDIUM | LARGE

Cart	Ref No	Part Number	Part Description	Required	Remarks
View My Cart					
		PP8363	Connecting Rod		
					Connecting Rod
☐		3899450	Engine Connecting Rod		Recon Equivalent 3899450 RX
	1	3896970	Engine Connecting Rod	1	
	2	3896894	Bushing	1	

	3	3027106	Ring Dowel	2	
	4	3027108	Connecting Rod Cap Screw	2	M14 x 1.50 x 91
	5	3016760	Connecting Rod Bearing	12	Standard
	5	3016761	Connecting Rod Bearing	12	0.25 mm Oversize
	5	3016762	Connecting Rod Bearing	12	0.50 mm Oversize
	5	3016763	Connecting Rod Bearing	12	0.75 mm Oversize
	5	3016764	Connecting Rod Bearing	12	1.00 mm Oversize

© 2019 Cummins Inc., Box 3005, Columbus, IN 47202-3005 U.S.A.
Terms of Use and Disclaimers | Recommended System Requirements
Need Assistance? Please click on the Contact Us button in the top right corner of any page.

Parts Catalog - Option Detail

Electronic Parts Catalog - Option Detail				
Option	**Group**	**Graphic**	**Film Card**	**Date**
PP8363-01	01.04	cx200gh	II	21-MAR-05
Engines	ISM CM570, ISM CM570/870, ISM CM875, ISM CM876, ISM CM876 E, ISM11 CM876 M103, ISM11 CM876 SN, M11 CELECT, M11 CELECT PLUS, M11 MECHANICAL, QSM11 CM570, QSM11 CM876			

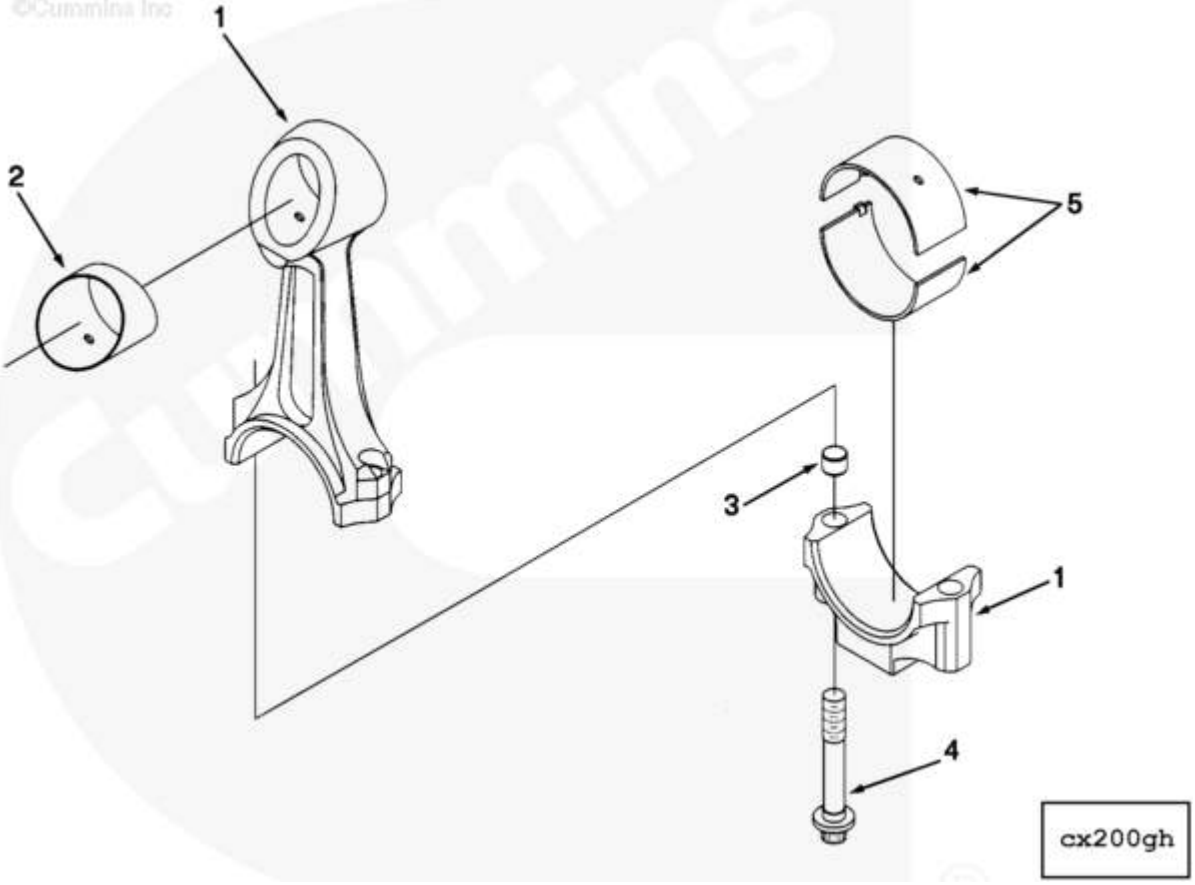

SMALL | MEDIUM | LARGE

Cart	Ref No	Part Number	Part Description	Required	Remarks
View My Cart					
		PP8363-01	Connecting Rod		
					Connecting Rod
☐		3899450	Engine Connecting Rod		Recon Equivalent 3899450 RX
	1	3896970	Engine Connecting Rod	1	

☐	2	3896894	Bushing	1	
☐	3	3027106	Ring Dowel	2	
☐	4	3027108	Connecting Rod Cap Screw	2	M14 x 1.50 x 91
☐	5	3016760	Connecting Rod Bearing	12	Standard
☐	5	3016761	Connecting Rod Bearing	12	0.25 mm Oversize
☐	5	3016762	Connecting Rod Bearing	12	0.50 mm Oversize
☐	5	3016763	Connecting Rod Bearing	12	0.75 mm Oversize
☐	5	3016764	Connecting Rod Bearing	12	1.00 mm Oversize

© 2019 Cummins Inc., Box 3005, Columbus, IN 47202-3005 U.S.A.
Terms of Use and Disclaimers | Recommended System Requirements
Need Assistance? Please click on the Contact Us button in the top right corner of any page.

Parts Catalog - Option Detail

Electronic Parts Catalog - Option Detail				
Option	**Group**	**Graphic**	**Film Card**	**Date**
EA2070	21.01.1	ea201gu	II	07-APR-04
Engines	ISM CM570, ISM CM570/870, ISM CM875, ISM CM876, ISM CM876 E, ISM11 CM876 M103, ISM11 CM876 SN, M11 CELECT, M11 CELECT PLUS, M11 MECHANICAL, QSM11 CM570, QSM11 CM876			

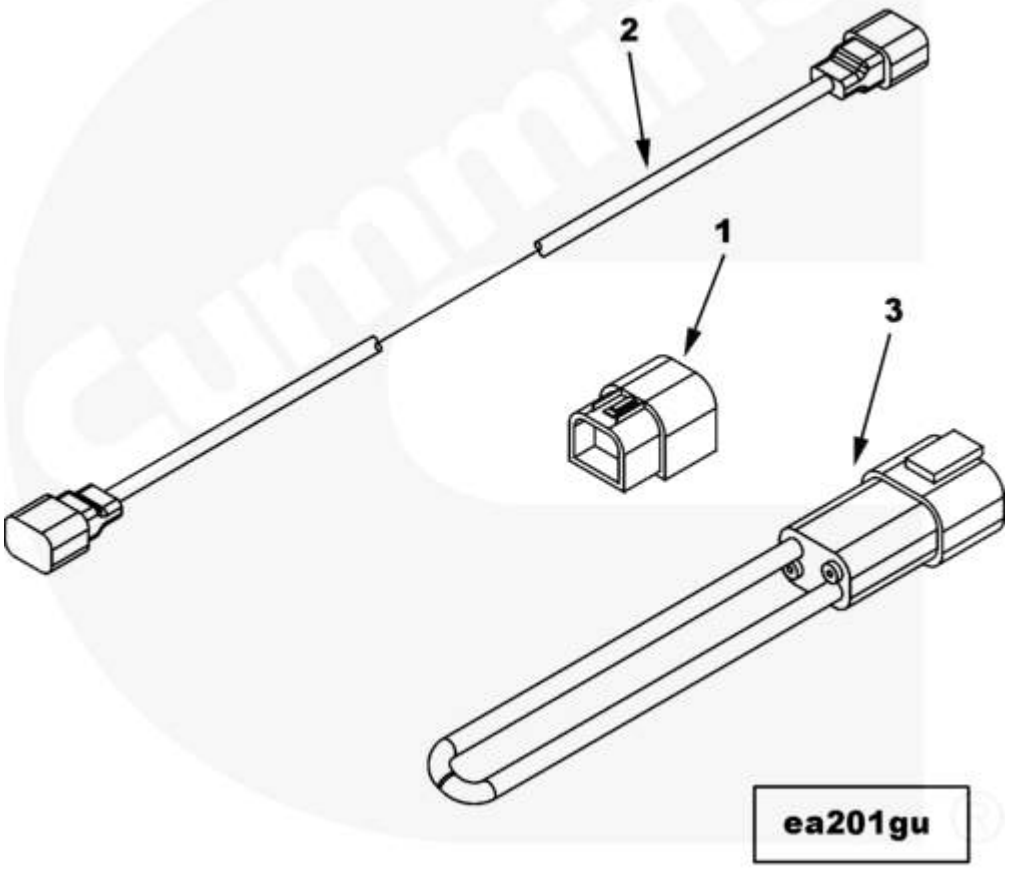

SMALL | MEDIUM | LARGE

Cart	Ref No	Part Number	Part Description	Required	Remarks
View My Cart					
		EA2070	Control Panel Wiring Harness		
					Control Panel Wiring Harness
					Engine Family: M11 Series

					Includes jumper harness for
					can 1 and 3 only one per boat
					required for twin engine
					installation.
☐	1	3969774	Wiring Harness	2	
☐	2	3971973	Wiring Harness	1	
☐	3	4003626	Wiring Harness	1	

© 2019 Cummins Inc., Box 3005, Columbus, IN 47202-3005 U.S.A.
Terms of Use and Disclaimers | Recommended System Requirements
Need Assistance? Please click on the Contact Us button in the top right corner of any page.

Parts Catalog - Option Detail

Electronic Parts Catalog - Option Detail				
Option	**Group**	**Graphic**	**Film Card**	**Date**
CH2021-03	10.02	ch200gk	II	15-MAY-01
Engines	ISM CM570, ISM CM570/870, ISM CM875, ISM CM876, ISM CM876 E, ISM11 CM876 M103, ISM11 CM876 SN, M11 CELECT, M11 CELECT PLUS, M11 MECHANICAL, QSM11 CM570, QSM11 CM876			

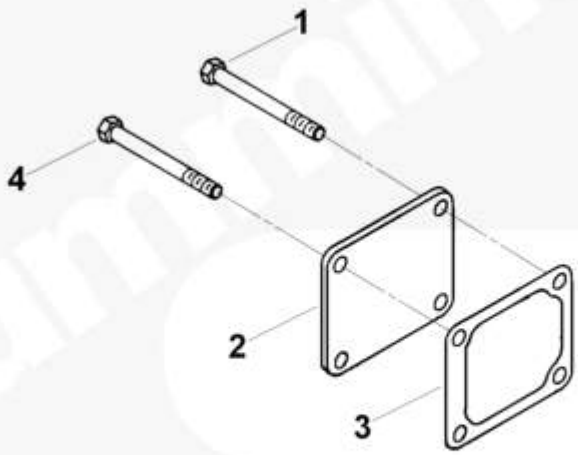

ch200gk

SMALL | MEDIUM | LARGE

Cart	Ref No	Part Number	Part Description	Required	Remarks
View My Cart					
		CH2021-03	Coolant Heater Starting Aid		MR - AID, COOLANT HEATER...(More)
					STARTING
					Engine Family: M11
					No future requirement to
					install an engine coolant
					heater, Kim Hotstart or other
					external heaters mounted in

					heater housing located right
					rear on water header plate.
					Heating Element Mtg Style:
					No element - Blanking Plate
					Installed
					Stud Provided: Stud - Upper
					R.H. Corner
☐	1	3034836	Hexagon Head Cap Screw	3	M10 x 1.50 x 30
☐	2	3253334	Cover Plate	1	
☐	3	3893690	Heater Housing Gasket	1	To Be Used On M11 Engine Only
☐	4	3883394	Studded Hexagon Cap Screw	1	M8x1.25x20 - M10x1.50x70

© 2019 Cummins Inc., Box 3005, Columbus, IN 47202-3005 U.S.A.
Terms of Use and Disclaimers | Recommended System Requirements
Need Assistance? Please click on the Contact Us button in the top right corner of any page.

Parts Catalog - Option Detail

Electronic Parts Catalog - Option Detail				
Option	**Group**	**Graphic**	**Film Card**	**Date**
WF2083-05	08.08	wf202gt	II	11-MAR-02
Engines	ISM CM570, ISM CM570/870, ISM CM875, ISM CM876, ISM CM876 E, ISM11 CM876 M103, ISM11 CM876 SN, M11 CELECT, M11 CELECT PLUS, M11 MECHANICAL, QSM11 CM570, QSM11 CM876			

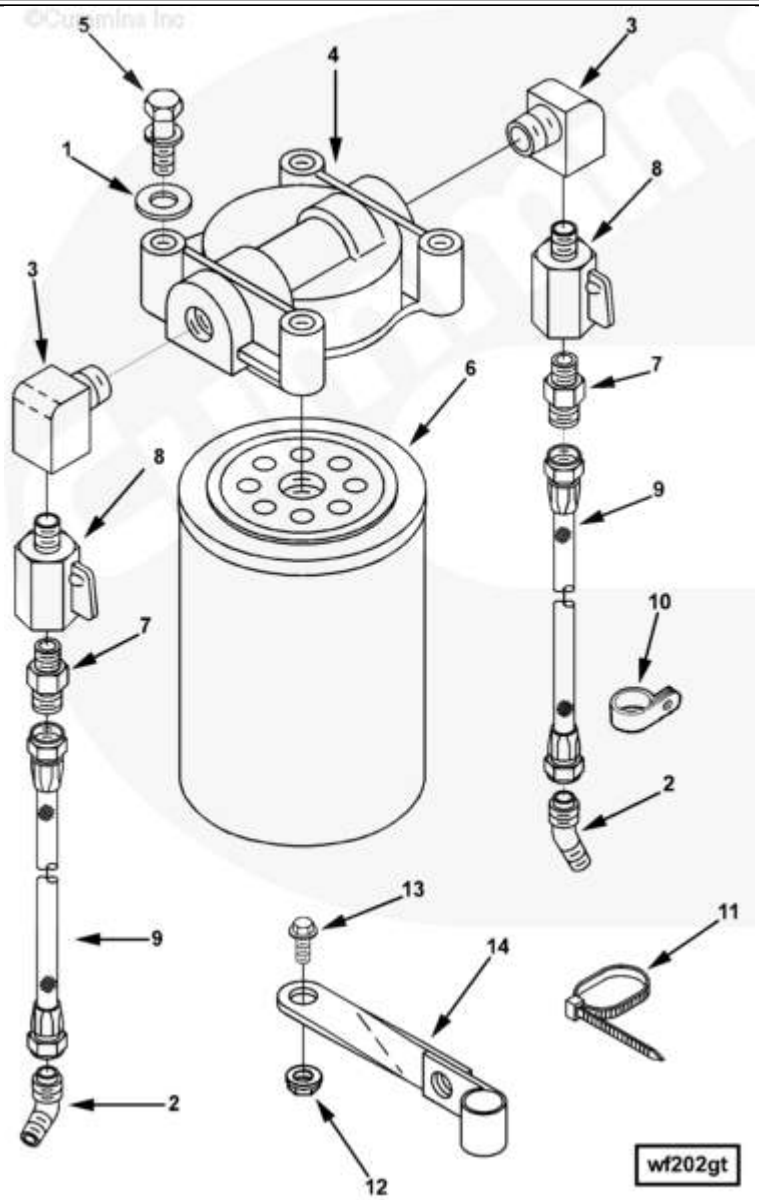

SMALL | MEDIUM | LARGE

Cart	Ref No	Part Number	Part Description	Required	Remarks
View My Cart					
		WF2083-05	Corrosion Resistor		

					Corrosion Resistor
					Supplier: Cummins
					Corrosion Resistor Location:
					Front of Engine on Oil Filter
					Bracket
					Element Type: Spin-On
					Element Quantity: Single
					Inhibitor Type: DCA4
					DCA4 Units: 4
					For Use with Cooling Systems
					When the OEM Uses a Factory
					Fill Coolant that Contains a
					Precharge Dose of SCA. Final
					Concentration of (1.5) to
					(3.0) Units per Gallon for
					Total System Capacity is
					Required
					Crn Rstr Water Supply: Water
					Header Plate
					Crn Rstr Water Return: Water
					Header Plate
					Water Return Route: Routed
					High above Gear Cover
					Decal Provided: None
					Crn Rstr Bracket Supplier:
					Cummins
					Corrosion Protection
					Included: Water Header Plate

☐	1	S 602	Plain Washer	4	3/8 in.
☐	2	S 1047 A	Male Adapter Elbow	2	
☐	3	70470	Plain Street Pipe Elbow	2	
☐	4	204163	Corrosion Resistor Head	1	
☐	5	3012471	Captive Washer Cap Screw	4	3/8 - 16 x 1 1/8 in.
☐	6	3100308	Corrosion Resistor	1	Buy from Cummins Filtration
☐	7	3630619	Male Connector	2	
☐	8	4003314	Shut-Off Valve	2	
☐	9	4078326	Flexible Hose	2	
☐	10	108722	Clip	2	
☐	11	3062329	Wire Tie Clamp	2	
☐	12	3900589	Hexagon Flange Nut	2	M8 X 1.25
☐	13	3900629	Hexagon Flange Head Cap Screw	1	M8 X 1.25 X 16
☐	14	3905804	Tube Brace	1	

© 2019 Cummins Inc., Box 3005, Columbus, IN 47202-3005 U.S.A.
Terms of Use and Disclaimers | Recommended System Requirements
Need Assistance? Please click on the Contact Us button in the top right corner of any page.

Parts Catalog - Option Detail

Electronic Parts Catalog - Option Detail				
Option	**Group**	**Graphic**	**Film Card**	**Date**
WF2083-05	08.08	wf202gt	II	11-MAR-02
Engines	ISM CM570, ISM CM570/870, ISM CM875, ISM CM876, ISM CM876 E, ISM11 CM876 M103, ISM11 CM876 SN, M11 CELECT, M11 CELECT PLUS, M11 MECHANICAL, QSM11 CM570, QSM11 CM876			

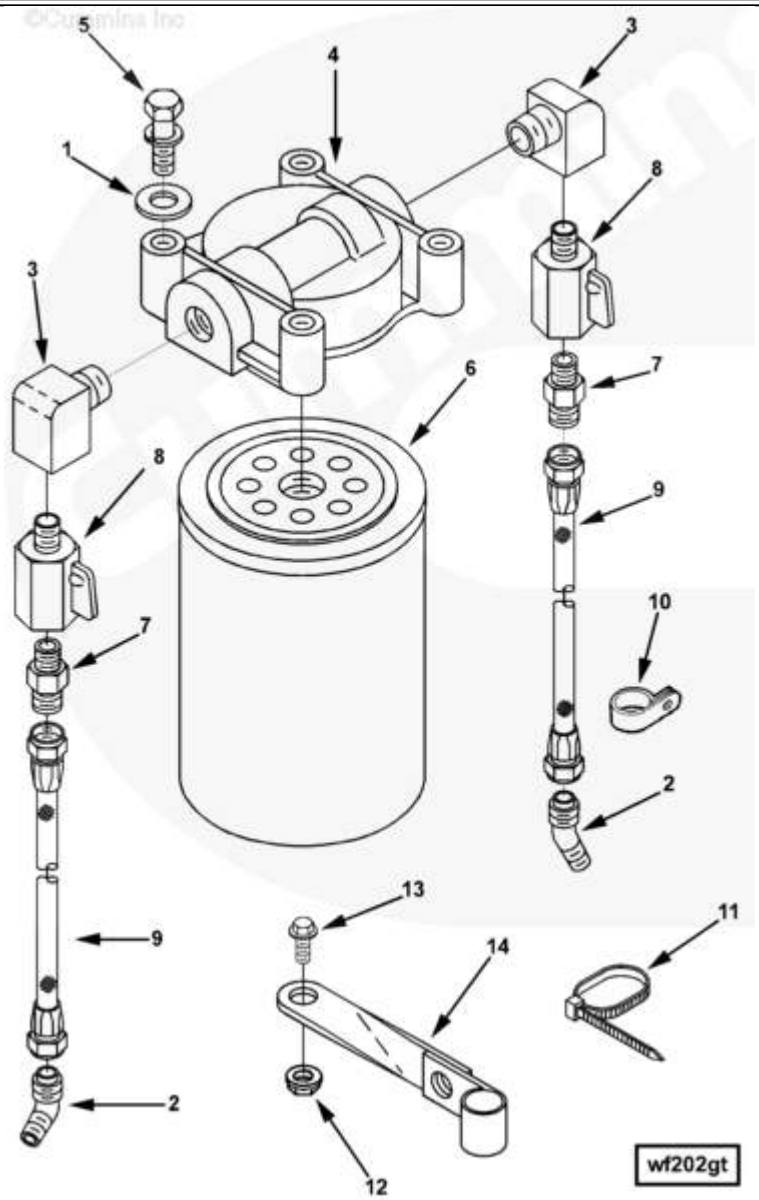

SMALL | MEDIUM | LARGE

Cart	Ref No	Part Number	Part Description	Required	Remarks
View My Cart					
		WF2083-05	Corrosion Resistor		

					Corrosion Resistor
					Supplier: Cummins
					Corrosion Resistor Location:
					Front of Engine on Oil Filter
					Bracket
					Element Type: Spin-On
					Element Quantity: Single
					Inhibitor Type: DCA4
					DCA4 Units: 4
					For Use with Cooling Systems
					When the OEM Uses a Factory
					Fill Coolant that Contains a
					Precharge Dose of SCA. Final
					Concentration of (1.5) to
					(3.0) Units per Gallon for
					Total System Capacity is
					Required
					Crn Rstr Water Supply: Water
					Header Plate
					Crn Rstr Water Return: Water
					Header Plate
					Water Return Route: Routed
					High above Gear Cover
					Decal Provided: None
					Crn Rstr Bracket Supplier:
					Cummins
					Corrosion Protection
					Included: Water Header Plate

☐	1	S 602	Plain Washer	4	3/8 in.
☐	2	S 1047 A	Male Adapter Elbow	2	
☐	3	70470	Plain Street Pipe Elbow	2	
☐	4	204163	Corrosion Resistor Head	1	
☐	5	3012471	Captive Washer Cap Screw	4	3/8 - 16 x 1 1/8 in.
☐	6	3100308	Corrosion Resistor	1	Buy from Cummins Filtration
☐	7	3630619	Male Connector	2	
☐	8	4003314	Shut-Off Valve	2	
☐	9	4078326	Flexible Hose	2	
☐	10	108722	Clip	2	
☐	11	3062329	Wire Tie Clamp	2	
☐	12	3900589	Hexagon Flange Nut	2	M8 X 1.25
☐	13	3900629	Hexagon Flange Head Cap Screw	1	M8 X 1.25 X 16
☐	14	3905804	Tube Brace	1	

© 2019 Cummins Inc., Box 3005, Columbus, IN 47202-3005 U.S.A.
Terms of Use and Disclaimers | Recommended System Requirements
Need Assistance? Please click on the Contact Us button in the top right corner of any page.

Parts Catalog - Option Detail

Electronic Parts Catalog - Option Detail				
Option	**Group**	**Graphic**	**Film Card**	**Date**
BR2049-02	03.02	br200gp	II	27-SEP-99
Engines	ISM CM570, ISM CM570/870, ISM CM875, ISM CM876, ISM CM876 E, ISM11 CM876 M103, ISM11 CM876 SN, M11 CELECT, M11 CELECT PLUS, M11 MECHANICAL, QSM11 CM570, QSM11 CM876			

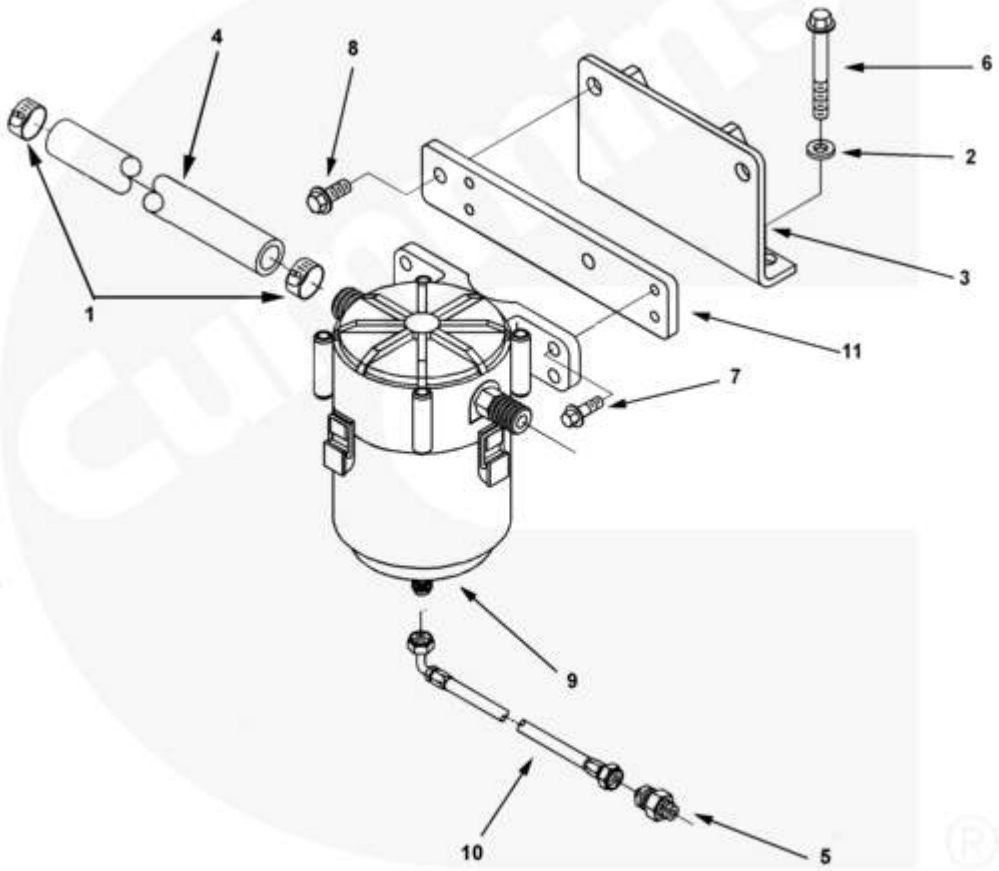

br200gp

SMALL | MEDIUM | LARGE

Cart	Ref No	Part Number	Part Description	Required	Remarks
View My Cart					
		BR2049-02	Crankcase Breather		
					Crankcase Breather

					Mounting Arrangement:
					External
					Vent Location: Side
					Vent Tube Routing: Customer
					Supplied
					Breather System: Closed
					Breather Tube for Connection
					to Closed Crankcase Breather
					System
☐	1	210753	Hose Clamp	2	9/16 - 1 1/4 inch
☐	2	3328328	Sealing Washer	2	M10
☐	3	3606976	Breather Bracket	1	
☐	4	4019816	Plain Hose	1	
☐	5	3607269	Check Valve	1	
☐	6	3896408	Hexagon Flange Head Cap Screw	2	M10 x 1.50 x 80
☐	7	3900631	Hexagon Flange Head Cap Screw	4	M8 X 1.25 X 25.
☐	8	3902460	Hexagon Flange Head Cap Screw	2	M10 X 1.50 X 25.
☐	9	4003250	Crankcase Breather	1	
☐	10	4003263	Flexible Hose	1	CCV Oil Drain To HHC
☐	11	4019570	Breather Bracket	1	
☐		4019745	Breather Element	1	
☐		4019746	Head Assembly	1	
☐		4019747	Head Assembly	1	
☐		4019748	Bypass Indicator	1	
☐		4019833	Inlet Fitting	1	
☐		4019834	Outlet Fitting	1	

© 2019 Cummins Inc., Box 3005, Columbus, IN 47202-3005 U.S.A.
Terms of Use and Disclaimers | Recommended System Requirements
Need Assistance? Please click on the Contact Us button in the top right corner of any page.

Parts Catalog - Option Detail

Electronic Parts Catalog - Option Detail				
Option	**Group**	**Graphic**	**Film Card**	**Date**
BR2049-02	03.02	br200gp	II	27-SEP-99
Engines	ISM CM570, ISM CM570/870, ISM CM875, ISM CM876, ISM CM876 E, ISM11 CM876 M103, ISM11 CM876 SN, M11 CELECT, M11 CELECT PLUS, M11 MECHANICAL, QSM11 CM570, QSM11 CM876			

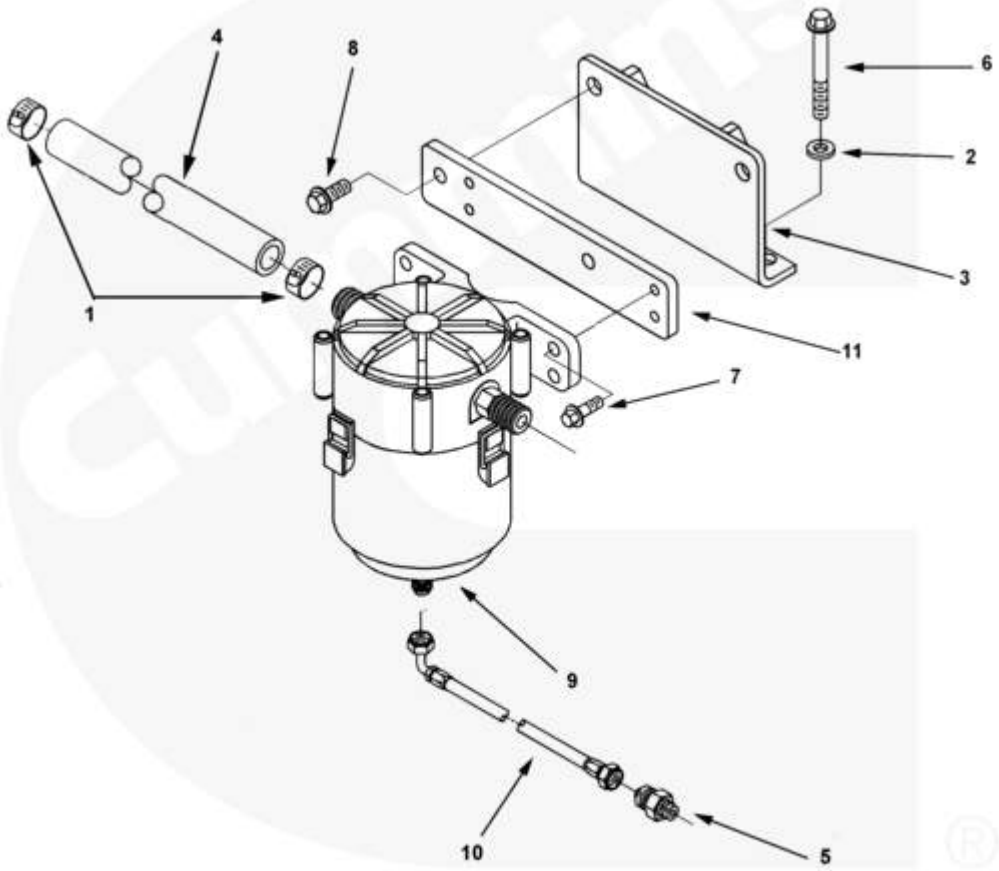

br200gp

SMALL | MEDIUM | LARGE

Cart	Ref No	Part Number	Part Description	Required	Remarks
View My Cart					
		BR2049-02	Crankcase Breather		
					Crankcase Breather

					Mounting Arrangement:
					External
					Vent Location: Side
					Vent Tube Routing: Customer
					Supplied
					Breather System: Closed
					Breather Tube for Connection
					to Closed Crankcase Breather
					System
☐	1	210753	Hose Clamp	2	9/16 - 1 1/4 inch
☐	2	3328328	Sealing Washer	2	M10
☐	3	3606976	Breather Bracket	1	
☐	4	4019816	Plain Hose	1	
☐	5	3607269	Check Valve	1	
☐	6	3896408	Hexagon Flange Head Cap Screw	2	M10 x 1.50 x 80
☐	7	3900631	Hexagon Flange Head Cap Screw	4	M8 X 1.25 X 25.
☐	8	3902460	Hexagon Flange Head Cap Screw	2	M10 X 1.50 X 25.
☐	9	4003250	Crankcase Breather	1	
☐	10	4003263	Flexible Hose	1	CCV Oil Drain To HHC
☐	11	4019570	Breather Bracket	1	
☐		4019745	Breather Element	1	
☐		4019746	Head Assembly	1	
☐		4019747	Head Assembly	1	
☐		4019748	Bypass Indicator	1	
☐		4019833	Inlet Fitting	1	
☐		4019834	Outlet Fitting	1	

© 2019 Cummins Inc., Box 3005, Columbus, IN 47202-3005 U.S.A.
Terms of Use and Disclaimers | Recommended System Requirements
Need Assistance? Please click on the Contact Us button in the top right corner of any page.

Parts Catalog - Option Detail

Electronic Parts Catalog - Option Detail				
Option	**Group**	**Graphic**	**Film Card**	**Date**
BR2049-04	03.02	br200gp	II	25-APR-05
Engines	ISM CM570, ISM CM570/870, ISM CM875, ISM CM876, ISM CM876 E, ISM11 CM876 M103, ISM11 CM876 SN, M11 CELECT, M11 CELECT PLUS, M11 MECHANICAL, QSM11 CM570, QSM11 CM876			

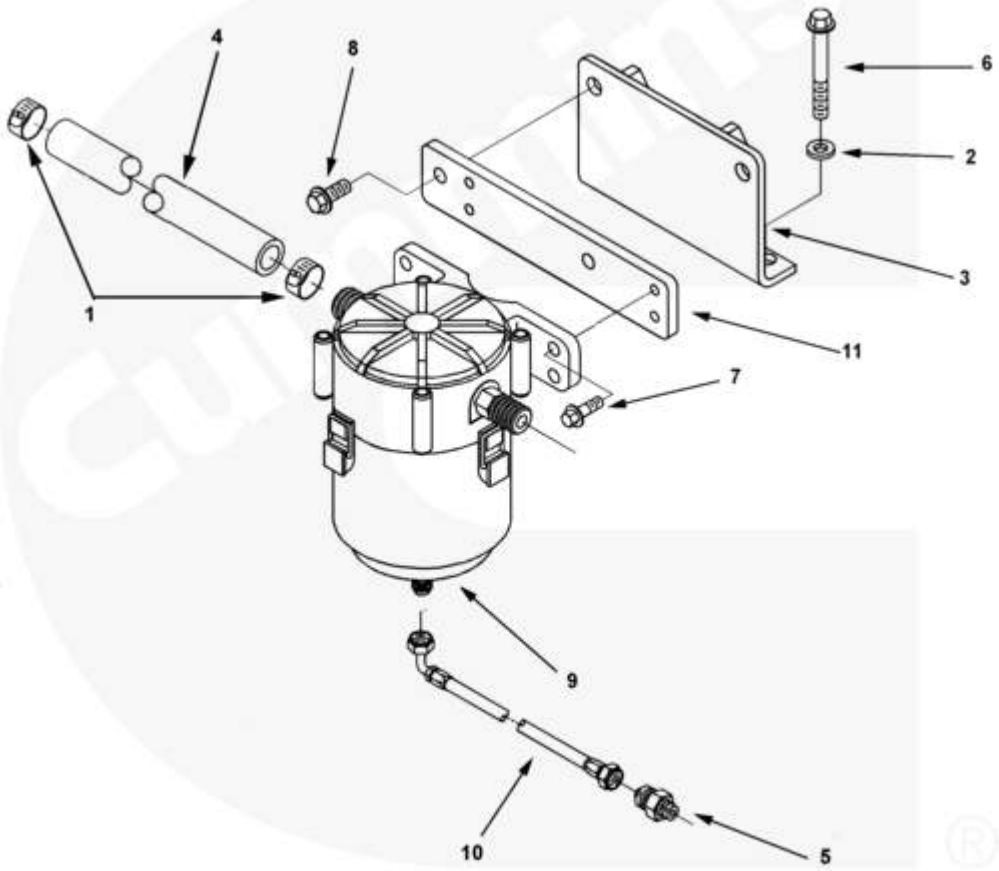

br200gp

SMALL | MEDIUM | LARGE

Cart	Ref No	Part Number	Part Description	Required	Remarks
View My Cart					
		BR2049-04	Crankcase Breather		
					Crankcase Breather

					Mounting Arrangement:
					External
					Vent Location: Side
					Vent Tube Routing: Customer
					Supplied
					Breather System: Closed
					Breather Tube for Connection
					to Closed Crankcase Breather
					System
☐	1	210753	Hose Clamp	2	9/16 - 1 1/4 inch
☐	2	3328328	Sealing Washer	2	M10
☐	3	3606976	Breather Bracket	1	
☐	4	4019816	Plain Hose	1	
☐	5	3607269	Check Valve	1	
☐	6	3896408	Hexagon Flange Head Cap Screw	2	M10 x 1.50 x 80
☐	7	3900631	Hexagon Flange Head Cap Screw	4	M8 X 1.25 X 25.
☐	8	3902460	Hexagon Flange Head Cap Screw	2	M10 X 1.50 X 25.
☐	9	4003250	Crankcase Breather	1	
☐	10	4003263	Flexible Hose	1	CCV Oil Drain To HHC
☐	11	4019570	Breather Bracket	1	
☐		4019745	Breather Element	1	
☐		4019746	Head Assembly	1	
☐		4019747	Head Assembly	1	
☐		4019748	Bypass Indicator	1	
☐		4019833	Inlet Fitting	1	
☐		4019834	Outlet Fitting	1	

© 2019 Cummins Inc., Box 3005, Columbus, IN 47202-3005 U.S.A.
Terms of Use and Disclaimers | Recommended System Requirements
Need Assistance? Please click on the Contact Us button in the top right corner of any page.

Parts Catalog - Option Detail

Electronic Parts Catalog - Option Detail				
Option	**Group**	**Graphic**	**Film Card**	**Date**
BR2049-04	03.02	br200gp	II	25-APR-05
Engines	ISM CM570, ISM CM570/870, ISM CM875, ISM CM876, ISM CM876 E, ISM11 CM876 M103, ISM11 CM876 SN, M11 CELECT, M11 CELECT PLUS, M11 MECHANICAL, QSM11 CM570, QSM11 CM876			

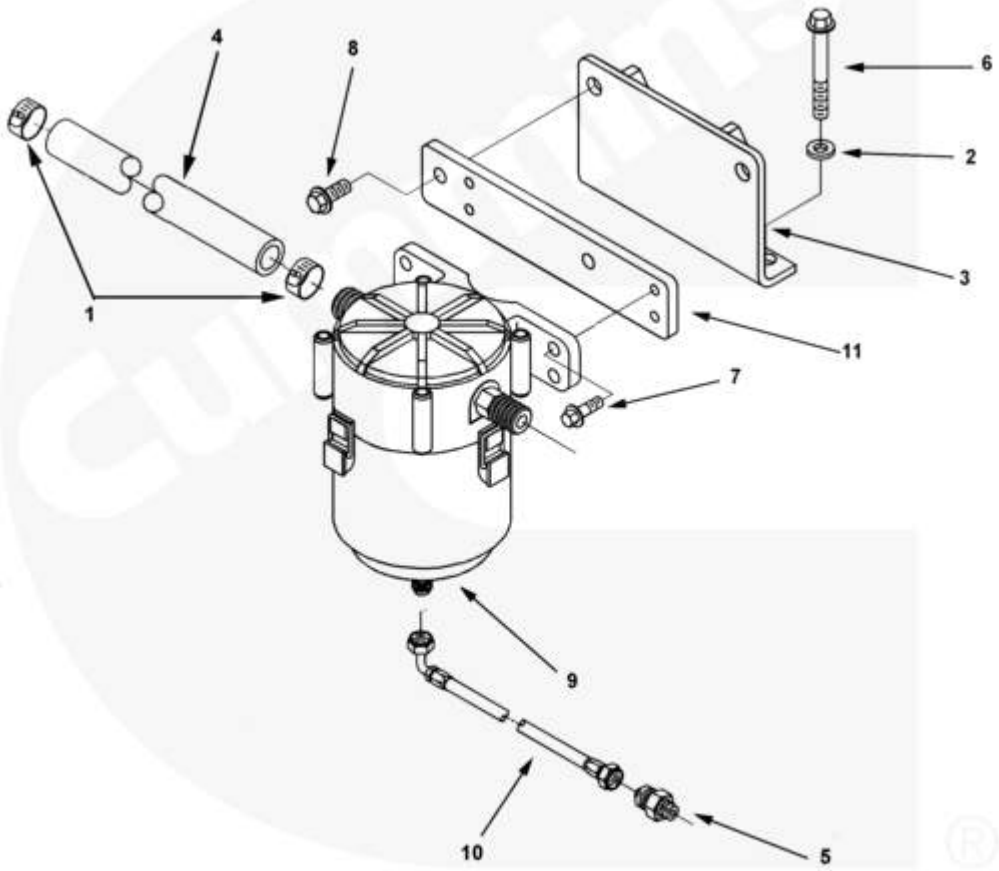

br200gp

SMALL | MEDIUM | LARGE

Cart	Ref No	Part Number	Part Description	Required	Remarks
View My Cart					
		BR2049-04	Crankcase Breather		
					Crankcase Breather

					Mounting Arrangement:
					External
					Vent Location: Side
					Vent Tube Routing: Customer
					Supplied
					Breather System: Closed
					Breather Tube for Connection
					to Closed Crankcase Breather
					System
☐	1	210753	Hose Clamp	2	9/16 - 1 1/4 inch
☐	2	3328328	Sealing Washer	2	M10
☐	3	3606976	Breather Bracket	1	
☐	4	4019816	Plain Hose	1	
☐	5	3607269	Check Valve	1	
☐	6	3896408	Hexagon Flange Head Cap Screw	2	M10 x 1.50 x 80
☐	7	3900631	Hexagon Flange Head Cap Screw	4	M8 X 1.25 X 25.
☐	8	3902460	Hexagon Flange Head Cap Screw	2	M10 X 1.50 X 25.
☐	9	4003250	Crankcase Breather	1	
☐	10	4003263	Flexible Hose	1	CCV Oil Drain To HHC
☐	11	4019570	Breather Bracket	1	
☐		4019745	Breather Element	1	
☐		4019746	Head Assembly	1	
☐		4019747	Head Assembly	1	
☐		4019748	Bypass Indicator	1	
☐		4019833	Inlet Fitting	1	
☐		4019834	Outlet Fitting	1	

© 2019 Cummins Inc., Box 3005, Columbus, IN 47202-3005 U.S.A.
Terms of Use and Disclaimers | Recommended System Requirements
Need Assistance? Please click on the Contact Us button in the top right corner of any page.

Parts Catalog - Option Detail

Electronic Parts Catalog - Option Detail				
Option	**Group**	**Graphic**	**Film Card**	**Date**
BR2726-02	03.02	br200gl	II	18-SEP-01
Engines	ISM CM570, ISM CM570/870, ISM CM875, ISM CM876, ISM CM876 E, ISM11 CM876 M103, ISM11 CM876 SN, M11 CELECT, M11 CELECT PLUS, M11 MECHANICAL, QSM11 CM570, QSM11 CM876			

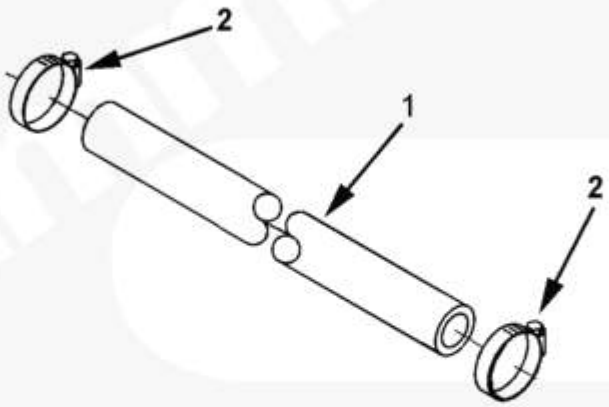

br200gl

SMALL | MEDIUM | LARGE

Cart	Ref No	Part Number	Part Description	Required	Remarks
View My Cart					
		BR2726-02	Crankcase Breather		
					Crankcase Breather
					Crankcase Breather Plumbing
					Mtg Arrangement: Internal

					Vent Location: Side
					Vent Tube Routing: Customer
					Supplied
					Breather System: Closed
					Breather Tube for Connection
					to Closed Crankcase Breather
					System
☐	1	4078592	Plain Hose	1	
☐	2	3922844	Hose Clamp	2	9/16 - 1 3/8 inch

© 2019 Cummins Inc., Box 3005, Columbus, IN 47202-3005 U.S.A.
Terms of Use and Disclaimers | Recommended System Requirements
Need Assistance? Please click on the Contact Us button in the top right corner of any page.

Parts Catalog - Option Detail

Electronic Parts Catalog - Option Detail				
Option	**Group**	**Graphic**	**Film Card**	**Date**
BB2762-01	01.02	ks200gf	II	23-DEC-03
Engines	ISM CM570, ISM CM570/870, ISM CM875, ISM CM876, ISM CM876 E, ISM11 CM876 M103, ISM11 CM876 SN, M11 CELECT, M11 CELECT PLUS, M11 MECHANICAL, QSM11 CM570, QSM11 CM876			

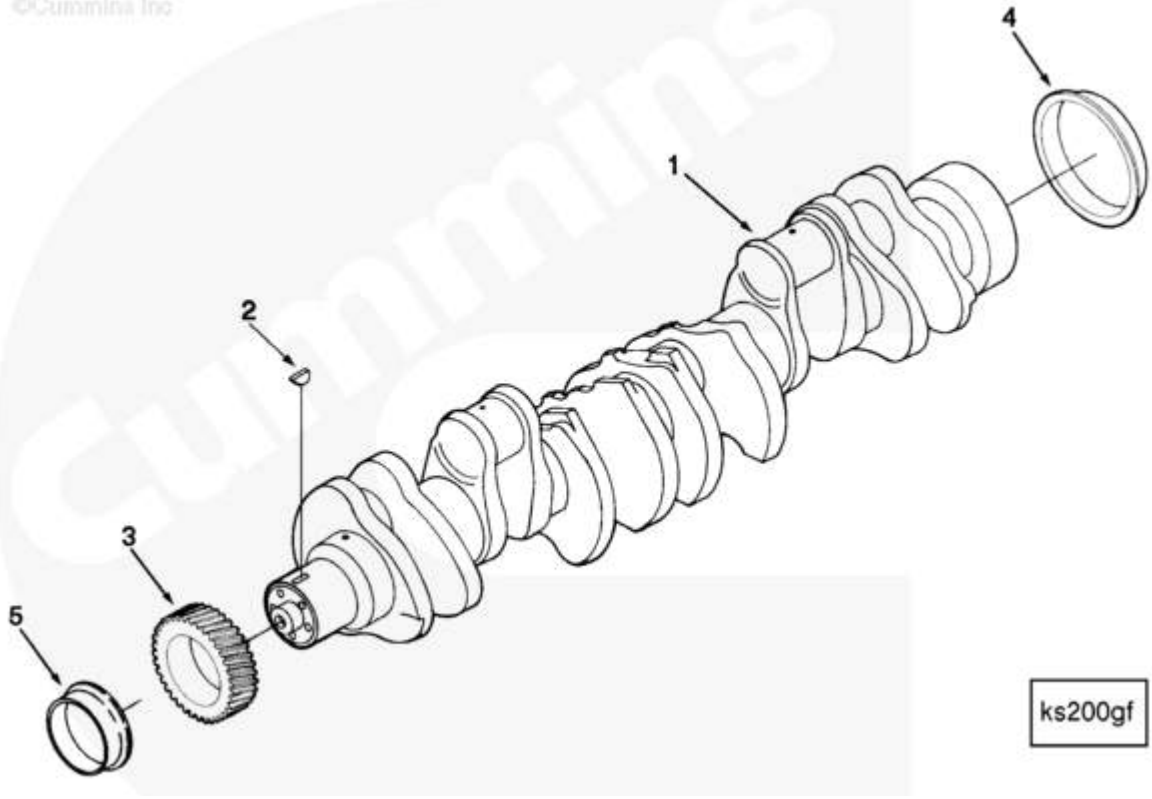

SMALL | MEDIUM | LARGE

Cart	Ref No	Part Number	Part Description	Required	Remarks
View My Cart					
		BB2762-01	Crankshaft		
					Crankshaft
	1	3073707	Engine Crankshaft	1	
☐	2	S 300	Plain Woodruff Key	1	
☐	3	3084445	Crankshaft Gear	1	

☐	4	4024777	Oil Seal Kit	1	Crankshaft (Rear)-Dry Clutch
☐	4	4024778	Oil Seal Kit	1	Only in Wet Clutch with Wear
☐	5	3820918	Wear Sleeve	1	Front

© 2019 Cummins Inc., Box 3005, Columbus, IN 47202-3005 U.S.A.
Terms of Use and Disclaimers | Recommended System Requirements
Need Assistance? Please click on the Contact Us button in the top right corner of any page.